MAN-SYSTEMS INTEGRATION STANDARDS

NASA-STD-3000
VOLUME I

REVISION B
JULY 1995

NASA
National Aeronautics and
Space Administration

The six GIAG Experts were as follows:

Julien M Christensen (PhD) - Chief Scientist, Human Factors, Universal Energy Systems, Inc., Dayton, Ohio.

James W. McBarron - Chief, Shuttle Support Branch, Crew Systems Division, NASA-Johnson Space Center, Houston, Texas.

John T. McConville (PhD) - President, Anthropology Research Project, Inc, Yellow Springs, Ohio.

William R. Pogue - Ex-Skylab astronaut, CAMUS, Inc., Springdale, Arkansas.

Robert C. Williges (PhD) - Prof. of Industrial Engineering and Operations Research/Prof. of Psychology, Virginia Polytechnic Institute, Blacksburg, Virginia.

Wesley E. Woodson - President and Research Director, Man-Factors, Inc., El Cajon, California.

The GIAG User group was composed of invited representatives form all of the prime aerospace contractors, support contractors, NASA centers and Headquarters, other Government agencies, and some non-aerospace contractors. The GIAG Users who participated in at least one of the GIAG meetings are listed in Figure F-2.

The technical content of these documents has been thoroughly reviewed by the GIAG participants. The data can be used with confidence that all known relevant human engineering requirements applicable to the space environment have been documented and are as technically valid as it is possible to determine. Iterations to the MSIS will be developed as physiological and technical knowledge and requirements dictate.

Comments from any user are welcome and will be considered for updating the database and the documentation. A Recommendations and Comments form appears at the end of this volume to facilitate user inputs.

Figure F-1

Contractor Team and Topic Assignments

BOEING AEROSPACE COMPANY		
Charles W. Geer	Program Manager	
Keith H. Miller	Technical Leader/Editor-in-Chief	
	1.0	Introduction
	2.0	General Requirements
	6.0	Crew Safety
(Robert Horne)	11.0	Hardware and Equipment
	13.0	Facility Management
	Vol. 2	Appendix
Eric Liening/Han Peters	5.1	Atmosphere
	5.8	Thermal Environment
Patrick Cornelius/Keith Miller	5.2	Microgravity
	5.3	Acceleration
	5.9	Combined Environmental E
Charles Wright	5.4	Acoustics
	5.5	Vibrations
Eugene Normand	5.7	Radiation
Ethel E. Erickson		SDMS Data Entry and Proofreading
LOCKHEED MISSILES & SPACE COMPANY		
Dr. David Regal	Subcontract Technical Leader	
	4.0	Human Performance Capabilities
	9.0	Workstations
Barry Tillman	3.0	Anthropometry and Biomechanics
	7.0	Health Management
	8.0	Architecture
	10.0	Activity Centers
Stuart Parsons/David Regal	12.0	Design for Maintainability
ESSEX CORPORATION		
Nicholas Shields	Subcontract Technical Leader	
	14.0	Extravehicular Activity (EVA)

FOREWORD

This is Volume I of the Man-Systems Integration Standards (MSIS) prepared for the National Aeronautics and Space Administration (NASA) The MSIS consists of a family of documents with a video tape as an adjunct . Each document volume has a specific purpose, as stated below, and each has been assembled from the data contained in Volume I.

The title and scope of each current volume are given below:

Volume I - Man Systems Integration Standards

This document contains man-systems integration design considerations, design requirements, and example design solutions for development of manned space systems. This is a NASA-level standards document applicable to all manned space programs including NASA, military, and commercial programs.

Volume II - Man-Systems Integration Standards - Appendices

This volume contains the appendices which pertain to the MSIS, and is organized as follows:

Appendix A	Bibliography
Appendix B	Paragraph References
Appendix C	Glossary
Appendix D	Abbreviations and Acronyms
Appendix E	Units of Measure and Conversion Factors
Appendix F	Not Applicable
Appendix G	Acceleration Regime Applicability
Appendix H	Video Tape User's Guide
Appendix I	Not Applicable
Appendix J	Keywords
Appendix K	MSIS Recipients Listing

Volume III - Man-Systems Integration Standards - Design Handbook

This volume is a condensed field guide of pertinent quantitative data extracted from Volume I.

Chapters of the MSIS family of documents are as follows:

1. Introduction
2. General Requirements
3. Anthropometry and Biomechanics
4. Human Performance Capabilities
5. Natural and Induced Environments

6. Crew Safety
7. Health Management
8. Architecture
9. Work stations
10. Activity Centers
11. Hardware and Equipment
12. Maintainability
13. Facility Management
14. Extravehicular Activity

Volume IV - Space Station Man-Systems Integration Standards

This volume underwent many changes as we phased into the International Space Station Alpha (ISSA) program. A smaller volume was developed from Volume IV and published as an ISSA document entitled **International Space Station Flight Crew Integration Standard (NASA-STD-3000/T)** with ISSA document number **SSP-50005**. This document will be maintained by the ISSA publishing operations in Interleaf format. The contents of the SSP-50005 document will be monitored and controlled by the ISSA Flight Crew Support and Integration Team.

Volume V - STS Man-Tended Payload Man-Systems Integration Standards

Deleted.

Volume VI - Assured Crew Return Vehicle Man-Systems Integration Standards

This document served as the Assured Crew Return Vehicle (ACRV) project man-systems integration design requirements. The data in this document is a subset of the data found in Volume I and defines the requirements which were pertinent to the ACRV as defined in the ACRV documentation. Additional data and guidelines were provided to assist in the design. The data contained in this volume which is pertinent to the International Space Station Alpha (ISSA) has been incorporated into ISSA document SSP-50005.

The original MSIS document was assembled for NASA by the Boeing Aerospace Company (BAC), Kent, Washington, in conjunction with subcontractors Lockheed Missiles and Space Company (LMSC), Sunnyvale, California; Essex Corporation, Huntsville, Alabama; and CAMUS, Inc., Springdale, Arkansas. The contractor team leaders and section authors for this effort are listed in Figure F-1. Subsequent iterations to the MSIS will be developed for NASA by the custodial organization at JSC.

A Government\Industry Advisory Group (GIAG), composed of a panel of "Experts" and "Users", met four times to review the technical content as it was being developed.

Figure F-2

Government/Industry Advisory Group
User Group
(Attended One or More of the GIAG Meetings)

Cletis Booher	NASA - Johnson Space Center
Gerald Carr	CAMUS, Inc
Gerald Chaikin	Chief, HEL Detachment, MICOM
Bryant Cramer	NASA Headquarters
T. Lee Doolittle	University of Washington
Capt. Vance Gilstrap	USAF Space Division
Rob Gray	ILC Dover
Richard F. Haines	NASA - Ames Research Center
Lt. Cdr. Steve Harris	Naval Air Test Center
Marion Hix	NASA - Goddard Space Flight Center
Capt. David Hoerr	NASA - Johnson Space Center
Marshall W. Horton	NASA - Johnson Space Center
Gary A. Johnson	McDonnell Douglas Astronautics Company
Neil A. Johnson	United Airlines Aircrew Training Center, Inc.
Rod Jones	NASA - Johnson Space Center
Joseph P. Joyce	NASA - Lewis Research Center
Mary M. Jurmain	Technology Inc.
Robert Kain	NASA - Johnson Space Center
Robert Kerle	Grumman Aerospace Corp.
Dave Kissinger	NASA - Johnson Space Center
Joseph J. Kosmo	NASA - Johnson Space Center
Ronald V. Kruk	CAE Electronics Ltd.
Lynn L. Lally	Lockheed Emsco
Pieter Lammers	European Space Agency
William A. Langdoc	NASA - Johnson Space Center
John Lauffer	Rocketdyne Corp.
Joel H. Leet	NASA - Kennedy Space Center
Charles M. Lewis	NASA - Marshall Space Flight Center
James L. Lewis	NASA - Johnson Space Flight Center
James S. Logan M.D.	NASA - Johnson Space Center

Figure F-2 (Continued)

Government/Industry Advisory Group

User Group
(Attended One or More of the GIAG Review Meetings)

Mike Lounge	NASA - Johnson Space Center
Don B. Morris	Rockwell International
Debra Muratore	Mitre Corporation
Melinda H. Naderi	NASA - Marshall Space Flight Center
D. C. Nagel	NASA - Ames Research Center
George Nelson	NASA - Johnson Space Center
Bob Overmyer	Martin Marietta Corp.
Stuart Parsons	Lockheed Missiles and Space Company
Virgil A. Paull	Martin Marietta Corp.
Maj. John C. Pellosie	USAF AAMRL/HEG
Martin Pollack	Grumman Aerospace Corp.
Larry Price	McDonnell Douglas Astronautics
A. M. Lex Ray	Martin Marietta
John A. Roebuck	Rockwell International
Dane Russo	Northrup Services
Patricia Santy, M.D.	NASA - Johnson Space Center
Richard Sauer	NASA - Johnson Space Center
R. W. Scarlata	General Electric
Gerald Shinkle	NASA - Johnson Space Center
Daniel H. Spoor, M.D.	Technology Inc.
Jack Stokes	NASA - Marshall Space Flight Center
Earl Switzer	Arinc Research Corp.
Allen B. Thompson	Martin Marietta - Denver
Robert Trevino	NASA - Johnson Space Center
Conway Underwood	Boeing Aerospace Company
Frank Welman	Arinc Research Corp.
Charles Wheelwright	NASA - Johnson Space Center
H. Eugene Winkler	NASA - Johnson Space Center
Harry L. Wolbers	McDonnell Douglas Astronautics Company
Maj. Lynn Woolard	NASA - Kennedy Space Center
Barbara Woolford	NASA - Johnson Space Center

Table of Contents

		Page
1.0	**INTRODUCTION**	**1-1**
1.1	PURPOSE	1-1
1.2	OVERVIEW	1-1
1.3	SCOPE, PRECEDENCE, AND LIMITATIONS	1-2
1.4	HOW TO USE THE DOCUMENTS	1-5
1.5	STANDARDS DATABASE (TBD)	1-8
2.0	**GENERAL REQUIREMENTS**	**2-1**
2.1	INTRODUCTION	2-1
2.2	GENERAL DESIGN CONSIDERATIONS	2-1
2.3	GENERAL DESIGN REQUIREMENTS	2-1
3.0	**ANTHROPOMETRY AND BIOMECHANICS**	**3-1**
3.1	INTRODUCTION	3-1
3.2	GENERAL ANTHROPOMETRICS & BIOMECHANICS RELATED DESIGN CONSIDERATIONS	3-1
3.3	ANTHROPOMETRIC AND BIOMECHANICS RELATED DESIGN DATA	3-9
4.0	**HUMAN PERFORMANCE CAPABILITIES**	**4-1**
4.1	INTRODUCTION	4-1
4.2	VISION	4-1
4.3	AUDITORY SYSTEM	4-3
4.4	OLFACTION AND TASTE	4-5
4.5	VESTIBULAR SYSTEM	4-5
4.6	KINESTHESIA	4-7
4.7	REACTION TIME	4-8
4.8	MOTOR SKILLS (Coordination)	4-8
4.9	STRENGTH	4-9
4.10	WORKLOAD	4-14
4.11	EFFECTS OF DECONDITIONING	4-20

5.0 NATURAL AND INDUCED ENVIRONMENTS 5-1

5.1 ATMOSPHERE 5-1
5.2 MICROGRAVITY 5-23
5.3 ACCELERATION 5-28
5.4 ACOUSTICS 5-41
5.5 VIBRATION 5-61
5.6 (THIS PARAGRAPH WAS NOT USED) 5-83
5.7 RADIATION 5-83
5.8 THERMAL ENVIRONMENT 5-133
5.9 COMBINED ENVIRONMENTAL EFFECTS 5-153

6.0 CREW SAFETY 6-1

6.1 INTRODUCTION 6-1
6.2 GENERAL SAFETY 6-1
6.3 MECHANICAL HAZARDS 6-2
6.4 ELECTRICAL HAZARDS 6-6
6.5 TOUCH TEMPERATURE 6-20
6.6 FIRE PROTECTION AND CONTROL 6-21
6.7 DECOMPRESSION HAZARDS 6-24

7.0 HEALTH MANAGEMENT 7-1

7.1 INTRODUCTION 7-1
7.2 PREVENTIVE CARE 7-1
7.3 MEDICAL CARE 7-28

8.0 ARCHITECTURE 8-1

8.1 INTRODUCTION 8-1
8.2 OVERALL ARCHITECTURAL CONSIDERATIONS AND REQUIREMENTS 8-1
8.3 CREW STATION ADJACENCIES 8-4
8.4 COMPARTMENT AND CREW STATION ORIENTATION 8-7
8.5 LOCATION CODING 8-9
8.6 ENVELOPE GEOMETRY FOR CREW FUNCTIONS 8-12
8.7 TRAFFIC FLOW 8-18
8.8 TRANSLATION PATHS 8-22
8.9 MOBILITY AIDS AND RESTRAINTS ARCHITECTURAL INTEGRATION 8-27

8.10	HATCHES AND DOORS	8-29
8.11	WINDOW INTEGRATION	8-33
8.12	INTERIOR DESIGN AND DECOR	8-38
8.13	LIGHTING	8-44
9.0	**WORKSTATIONS**	**9-1**
9.1	INTRODUCTION	9-1
9.2	WORKSTATION LAYOUT	9-1
9.3	CONTROLS	9-16
9.4	DISPLAYS	9-56
9.5	LABELING AND CODING	9-84
9.6	USER/COMPUTER INTERACTION DESIGN CONSIDERATONS	9-100
10.0	**ACTIVITY CENTERS**	**10-1**
10.1	INTRODUCTION	10-1
10.2	PERSONAL HYGIENE	10-1
10.3	BODY WASTE MANAGEMENT SYSTEM	10-5
10.4	CREW QUARTERS	10-11
10.5	GALLEY AND WARDROOM	10-15
10.6	MEETING FACILITY	10-18
10.7	RECREATION FACILITY	10-21
10.8	MICROGRAVITY COUNTERMEASURE FACILITY	10-25
10.9	SPACE MEDICAL FACILITY	10-30
10.10	LAUNDRY FACILITY	10-36
10.11	TRASH MANAGEMENT FACILITY	10-38
10.12	STOWAGE FACILITY	10-40
11.0	**HARDWARE AND EQUIPMENT**	**11-1**
11.1	INTRODUCTION	11-1
11.2	TOOLS	11-1
11.3	DRAWERS AND RACKS	11-9
11.4	CLOSURES AND COVERS	11-16
11.5	MOUNTING HARDWARE	11-18
11.6	HANDLES AND GRASP AREAS (FOR PORTABLE ITEMS)	11-20
11.7	RESTRAINTS	11-24
11.8	MOBILITY AIDS	11-35
11.9	FASTENERS	11-38
11.10	CONNECTORS	11-46

11.11 WINDOWS 11-53
11.12 PACKAGING 11-61
11.13 CREW PERSONAL EQUIPMENT 11-63
11.14 CABLE MANAGEMENT 11-67

12.0 DESIGN FOR MAINTAINABILITY 12-1

12.1 INTRODUCTION 12-1
12.2 DESIGN FOR MAINTAINABILITY DESIGN CONSIDERATIONS . . 12-1
12.3 DESIGN FOR MAINTAINABILITY DESIGN REQUIREMENTS 12-1

13.0 FACILITY MANAGEMENT 13-1

13.1 INTRODUCTION 13-1
13.2 HOUSEKEEPING 13-1
13.3 INVENTORY CONTROL 13-5
13.4 INFORMATION MANAGEMENT 13-7

14.0 EXTRAVEHICULAR ACTIVITIES (EVA) 14-1

14.1 GENERAL EVA INFORMATION 14-1
14.2 EVA PHYSIOLOGY 14-4
14.3 EVA ANTHROPOMETRY 14-16
14.4 EVA WORKSTATIONS AND RESTRAINTS 14-33
14.5 EVA MOBILITY AND TRANSLATION 14-40
14.6 EVA TOOLS, FASTENERS, AND CONNECTORS 14-52
14.7 EVA ENHANCEMENT SYSTEMS 14-60

Table Of Contents

		Page
1.0	**INTRODUCTION**	**1-1**
1.1	**PURPOSE**	**1-1**
1.2	**OVERVIEW**	**1-1**
1.3	**SCOPE, PRECEDENCE, AND LIMITATIONS**	**1-2**
1.4	**HOW TO USE THE DOCUMENTS**	**1-5**
1.4.1	Generic Topical Organization	1-5
1.4.2	Locating Data for a Specific Topic	1-5
1.4.3	Appendices	1-7
1.4.3.1	References	1-7
1.4.3.2	Glossary, Acronyms, Units of Measure, and Conversion Factors	1-7
1.4.3.3	Acceleration Regimes - Applicability	1-7
1.4.3.4	Unresolved Data Problems (TBD)	1-7
1.4.3.5	Videotape User's Guide	1-7
1.4.4	Document Acquisition and Maintenance	1-8
1.5	**STANDARDS DATABASE (TBD)**	**1-8**

1.0 INTRODUCTION
{A}

1.1 PURPOSE
{A}

This document provides specific user information to ensure proper integration of the man-system interface requirements with those of other aerospace disciplines. These man-system interface requirements apply to launch, entry, on-orbit, and extraterrestrial space environments. This document is intended for use by design engineers, systems engineers, maintainability engineers, operations analysts, human factors specialists, and others engaged in the definition and development of manned space programs.

Concise design considerations, design requirements and design examples are provided. Requirements specified herein are applicable to all U.S. manned-space flight programs.

This document replaces earlier NASA field center human engineering standards documents (e.g., MSFC-STD-512A, Man/System Requirements for Weightless Environments; JSC-07387B, Crew Station Specifications). This document also incorporates human engineering standards and guidelines from many other NASA, military, and commercial human engineering standards applicable to the space environments described above.

The document volumes have been extracted from a relational data base.

(Refer to Paragraph 1.3, Scope, Precedence, and Limitations, for description of the documents.)

1.2 OVERVIEW
{A}

The MSIS was created to provide a single, comprehensive document defining all generic requirements for space facilities and related equipment which directly interface with crewmembers. The depth and breadth with which the MSIS covers the field of human factors as related to the space environment is easily seen in the following overview of the document's contents.

The chapter on Anthropometry and Biomechanics presents quantative information about human body size, posture, movements, surface area, and mass projected to the year 2000.

The chapter on Human Performance Capabilities documents the significant ways the performance capabilities of humans may change when they go into space.

The chapter on Natural and Induced Environments documents the conditions to which a crewmember will be exposed during space flight. These include atmospheric composition, microgravity and acceleration effects, and acceptable noise, vibrations, radiation, and thermal levels.

The chapter on Crew Safety deals with general safety concerns as they relate directly to the crewmember.

The chapter on Health Management discusses the measures that must be taken to maintain the health of the crewmembers.

The chapter on Architecture discusses the placement, arrangement, and grouping of compartments and crew stations in space modules, including design data for items which integrate these various areas. These include traffic flow and translation paths hatches and doors, location and orientation cures, and mobility aids and restraints.

The chapter on Workstations covers workstation design, including layout, controls, displays, labeling and coding, and user/computer interface.

The chapter on Activity Centers discusses design and layout requirements for off-duty crew stations in the space module. These include facilities for personal hygiene, body waste management, meetings, recreation, microgravity countermeasures, medical treatment, laundry, trash management, and storage facilities, also crew quarters, galley, and wardroom. The chapter on Hardware and Equipment provides information concerning tools, drawers and racks, closures, mounting hardware, handles and grasp areas, restraints, mobility aids, fasteners, connectors, windows, packaging, crew personal equipment, and cable management.

The chapter entitled "Design for Maintainability" covers general equipment design requirements; physical access; visual access; removal, replacement, and modularity requirements fault and isolation requirements; test point design; and requirements for a maintenance data management system.

The chapter on Facility Management covers housekeeping, inventory control, and information management.

The chapter on General EVA Information establishes guidelines for extravehicular activity which is defined as any activity performed by a pressure-suited crewmember in unpressurized or space environments.

Although written for application to the space environment, much of the information contained in the MSIS has obvious applicability to human interface/engineering problems encountered in terrestrial environments. Use of the MSIS in man-systems types of applications in one-g is encouraged as long as the user recognized the instances in which special consideration has been given to the micro-g environment in the document.

The MSIS will be kept current through an annual review process in which all users of the documents are invited to participate.

1.3 SCOPE, PRECEDENCE, AND LIMITATIONS

{A}

a. Document Scope - The overall documentation is contained in several volumes (currently four). Each document has a purpose, and each has been assembled from the data contained in Volume I. A videotape is also available as an adjunct to this documentation (see figure 1.3-1).

The title and scope of each volume are given below:

NASA-STD-3000, Volume I - Man-Systems Integration Standards

This document contains man-systems integration design considerations, design requirements, and example design solutions for development of manned space systems. This is a NASA-level standards document which is applicable to all manned space programs and is not limited to any specific NASA, military, or commercial program.

NASA-STD-3000, Volume II - Man-Systems Integration Standards - Appendices

This volume contains the appendices which pertain to the MSIS, and is organized as follows:

Appendix A	Bibliography
Appendix B	Paragraph References
Appendix C	Glossary
Appendix D	Abbreviations and Acronym
Appendix E	Units of Measure and Conversion Factors
Appendix F	Unresolved Data Problems and Issues (TBD)
Appendix G	Acceleration Regime Applicability
Appendix H	Videotape User's Guide
Appendix I	Standards Database (TBD)
Appendix J	Keywords
Appendix K	MSIS Recipients Listing

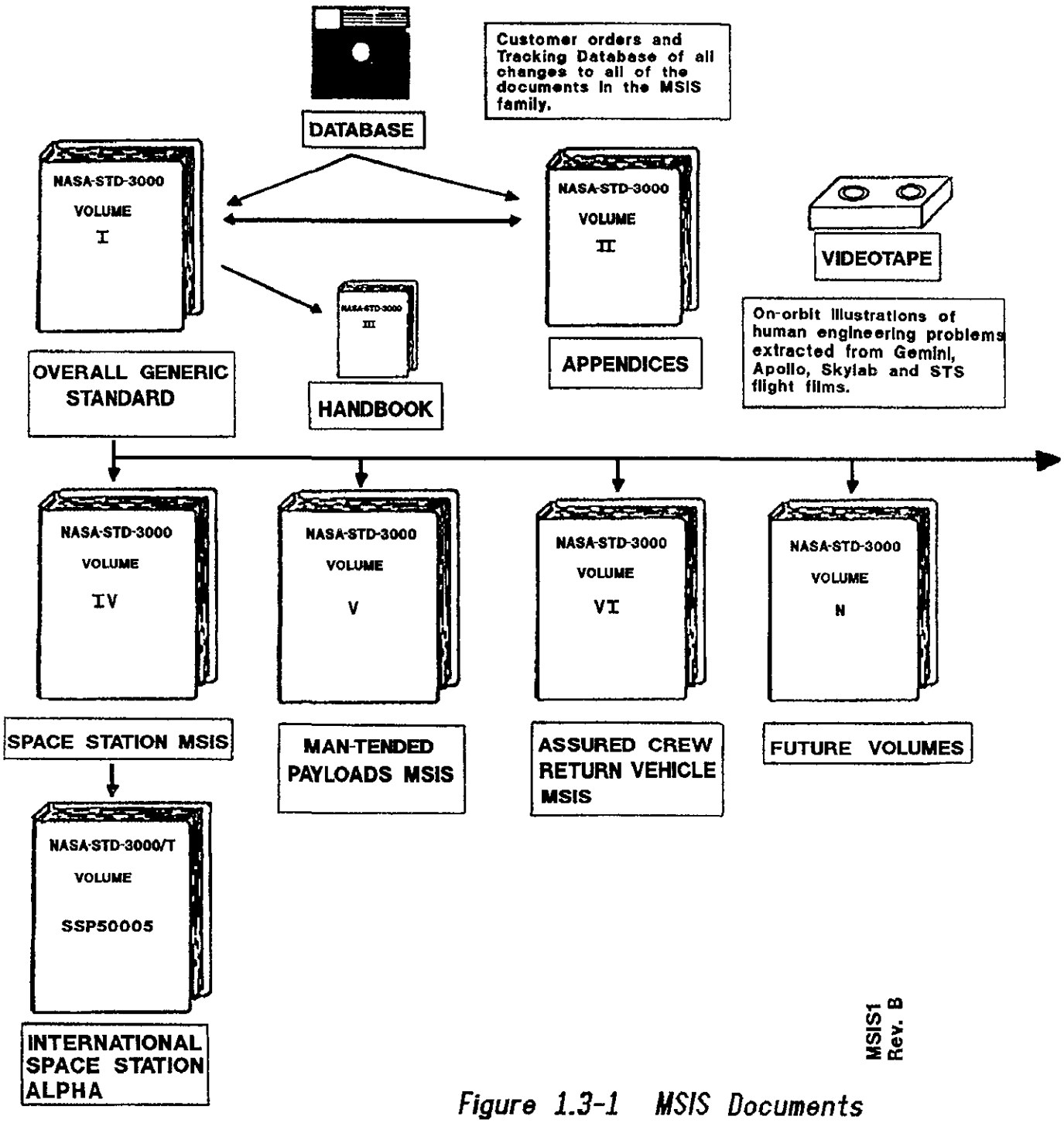

Figure 1.3-1 MSIS Documents

(Refer to Paragraph 1.4.3, Appendices, for description of these appendices.)

NASA-STD-3000, Volume III, Man-Systems Integration Standards - Design Handbook

This volume, is a condensed field guide of pertinent quantitative data extracted from Volume 1.

SSP 50005, International Space Station Flight Crew Integration Standard (NASA-STD-3000/T)

This document serves as the International Space Station Alpha (ISSA) program contractually binding man systems integration design requirements. The data in this document are a subset of the data found in Volume I and defines the firm requirements which are pertinent to the ISSA program only.

NASA-STD-3000, Volume V - STS Man-Tended Payload Man-Systems Integration Standards

This volume was created to document all the man-systems integration design requirements for the development of man-tended payloads to be serviced by the Space Transportation System (STS) Orbiter Vehicle. Data deemed pertinent to the STS program has been incorporated into existing STS documentation. It is not anticipated that an STS Man-Tended Payload Man-Systems Integration Standard will ever be published.

NASA-STD-3000, Volume VI - Assured Crew Return Vehicle Man-Systems Integration Standards

This volume was created to document all the man-systems integration design requirements for the development of the assured crew return vehicle. All requirements in this volume deemed to be pertinent to the International Space Station Alpha (ISSA) program have been incorporated in SSP 50005. No further update of this volume is anticipated.

(Subsequent volumes of NASA-STD-3000 will be developed as needed for future manned space programs or projects.)

b. Precedence - Unless otherwise specified, the man-systems integration standards in the "requirements" subsections take precedence over the provisions in other documents referenced by the system specifications.

In many topical sections, cross references are cited that refer the user from an IVA (Intravehicular Activity) topical section to a related EVA (Extravehicular Activity) topical section, and vice versa. There will be some cases where IVA equipment and facilities will be used in an EVA mode of operation during a contingency situation, e.g., passageways. Where the reader must interpret requirements, that apply to both EVA and IVA, it is important to understand that a section applying to an EVA requirement is more stringent. EVA requirements should not be compromised by using IVA standards for EVA equipment or the reverse, i.e., over-designing IVA equipment by backlashing EVA requirements on IVA equipment.

c. Limitations - Applicable sections of reference documents cited in the "Requirements" subsections are considered contractually binding as well. Those given in the "Introduction", "Design Considerations", and "Example Design Solutions" subsections should be considered reference material and, therefore, not contractually binding unless specified by the contracting program.

1.4 HOW TO USE THE DOCUMENTS

{A}

1.4.1 Generic Topical Organization

{A}

A generic organization has been adopted for most topics. There are generally four generic subsections for each topic:

- Introduction
- Design Considerations
- Design Requirements
- Example Design Solutions

The content of each of these four generic subsections is shown in Figure 1.4.1-1 and described below.

The "INTRODUCTION" subsection provides a synopsis of the scope of topical material covered in the section. The reader is referred to other sections where related material can be found.

The "DESIGN CONSIDERATIONS" subsection provides background material that helps the user understand the rationale behind the requirements. This subsection may contain discussions of the environments pertinent to the topic and other tutorial information. This is where guidelines, recommendations and other nonbinding provisions (the "shoulds") are given. The words "design considerations" appear in most of these paragraph titles.

The "DESIGN REQUIREMENTS" subsection provides the firm, contractually binding standards, requirements, and criteria (the "shalls"). These subsections are highlighted by using a sans serif-type font in the paragraph title, and using an italics font in the text.

The "EXAMPLE DESIGN SOLUTIONS" subsection is used where appropriate to illustrate and describe typical examples of how the requirements have been implemented in prior manned spacecraft.

1.4.2 Locating Data for a Specific Topic

{A}

In this document, there are several ways to locate information for a specific topic or topical area (see Figure 1.4.2-1):

a. Use the TABLE OF CONTENTS. The TOP LEVEL TABLE OF CONTENTS is found at the front of Volume 1. This top level table of contents shows only the first 2 levels of indenture of the 14 chapters.

b. Use the TAB DIVIDERS to go directly to the chapters. The detailed table of contents for the chapter is located behind the tab divider.

c. Use the KEYWORDS INDEX found in Appendix J of Volume II - The alphabetized keyword list in this appendix lists the paragraph numbers and titles that contain data applicable to each of the keywords.

d. Follow the (Refer to Paragraph.....) statements to find other related data.

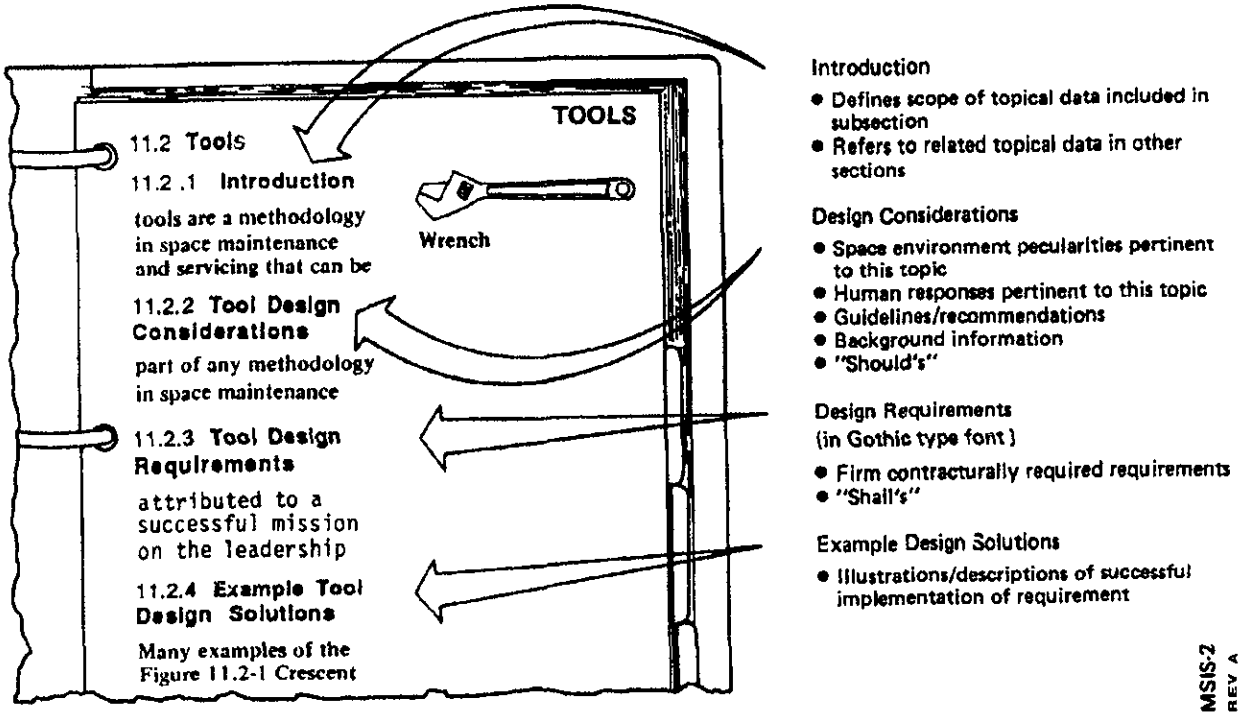

Figure 1.4.1-1. Almost Every Topical Subsection Utilizes "Generic" Organization Structure

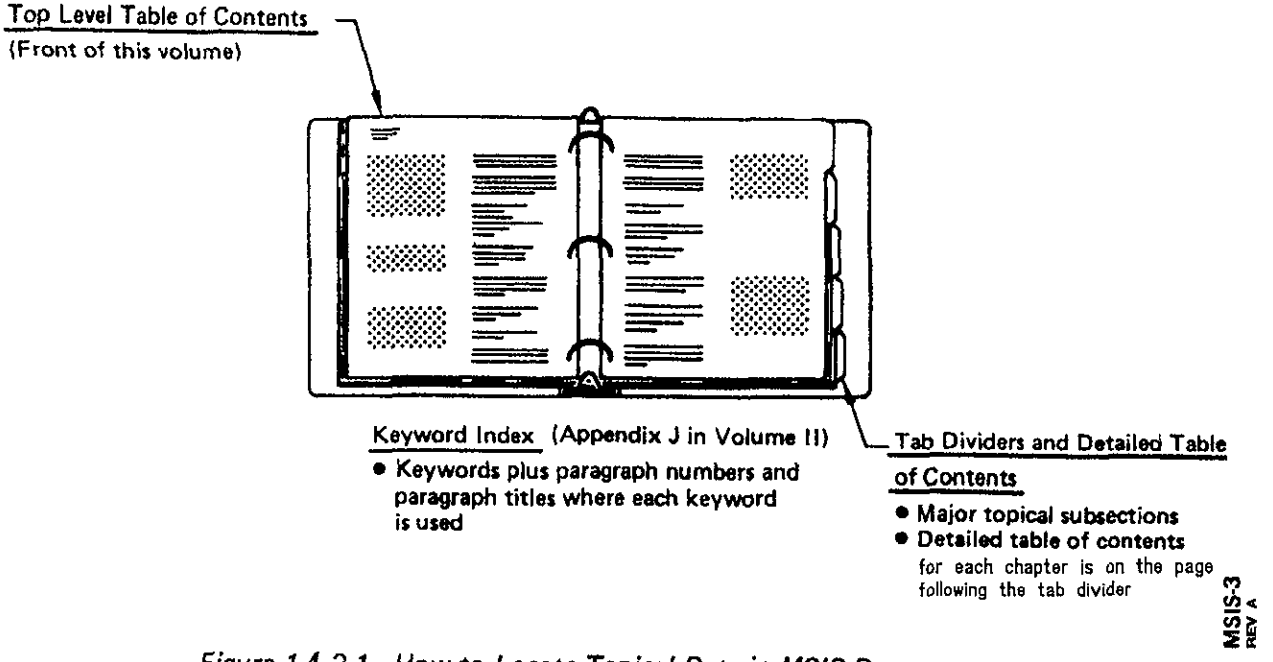

Figure 1.4.2-1. How to Locate Topical Data in MSIS Documents

1.4.3 Appendices
{A}

1.4.3.1 References
{A}

The references used as the basis for the data contained in the database and documents are listed in Appendices A and B of Volume II:

a. APPENDIX A - BIBLIOGRAPHY

1. This is the full bibliography of references used or examined during the development of the data.

2. References that were cited are listed in boldface type font.

b. APPENDIX B - PARAGRAPH REFERENCES

1. This appendix lists the paragraph numbers in numerical sequence.

2. Each reference used as a basis for the data in the paragraph is cited by the reference number.

3. For each reference, the specific location where data were obtained (section, paragraph, and/or page number) is cited.

1.4.3.2 Glossary, Acronyms, Units of Measure, and Conversion Factors
{A}

Definitions will be found in one of the following appendices in Volume II:

APPENDIX C - GLOSSARY

APPENDIX D - ABBREVIATIONS AND ACRONYMS

APPENDIX E - UNITS OF MEASURE AND CONVERSION FACTORS

1.4.3.3 Acceleration Regimes - Applicability
{A}

One of the unique features of the database is that every paragraph has been coded as the applicable acceleration regimes. At the beginning of each paragraph, a notation is made in brackets { } with one or two of the following codes:

O = Orbital = the microgravity acceleration environments encountered in orbital and very low acceleration transorbital operations.

L = Launch/Entry = the multi-G launch, entry, and abort acceleration environments.

P = Planetary = the G-loads encountered on the moon and Mars. Long-term, low-level accelerations encountered in some transorbital flight operations may be applicable. An artificial gravity system may also fall into this acceleration regime.

A = All = this regime includes all of the above plus one-g acceleration environment.

Appendix G in Volume II contains a matrix that lists all of the paragraphs and identifies which of these acceleration regimes are applicable. This list will be very useful when identifying man-system integration requirements for new space systems that have peculiar acceleration environments.

1.4.3.4 Unresolved Data Problems and Issues (TBD)

1.4.3.5 Videotape User's Guide
{A}

A videotape has been made that illustrates the various man-systems integration problems that have been identified during Gemini, Apollo, Skylab, and Shuttle manned space flights. The videotape contains scenes from on-orbit crew activities.

The videotape has a clock and notations of paragraph numbers from this document that correlate to the topics illustrated in the video.

A videotape users guide is provided in Appendix H of Volume II that lists the time, paragraph numbers, and paragraph titles.

1.4.4 Document Acquisition and Maintenance

{A}

Copies of this document and the videotape can be obtained in one of two ways:

a. This document can be reproduced without any restrictions.

b. Original copies of the document and videotape can be obtained from the following source:

MSIS Custodian/SP2
NASA - Johnson Space Center
Houston, TX 77058

Users are encouraged to use the "Recommendations and Comments" form found at the back of each document to bring to the MSIS Custodian's attention any discrepancies, problems, or issues related to the use of the documentation, videotape, or database.

1.5 STANDARDS DATABASE (TBD)

{A}

Table of Contents

		Page
2.0	**GENERAL REQUIREMENTS**	**2-1**
2.1	**INTRODUCTION**	**2-1**
2.2	**GENERAL DESIGN CONSIDERATIONS**	**2-1**
2.2.1	Simplicity Design Considerations	2-1
2.2.2	Standardization Design Considerations	2-1
2.3	**GENERAL DESIGN REQUIREMENTS**	**2-1**
2.3.1	Simplicity Design Requirements	2-1
2.3.2	Standardization Design Requirements	2-1

2.0 GENERAL REQUIREMENTS
{A}

2.1 INTRODUCTION
{A}

This section includes the general man/system design considerations and design requirements related to simplicity and standardization

2.2 GENERAL DESIGN CONSIDERATIONS
{A}

2.2.1 Simplicity Design Considerations
{A}

An uncomplicated, simple design is generally more reliable and easier to operate and maintain. When comparing alternative designs from the human engineering point of view, the simplest design will be the one that is easiest to operate and maintain because it will require less crew training, less crew workload, and will have the least potential for human error.

2.2.2 Standardization Design Considerations
{A}

Crew-use hardware (e.g., fasteners, electrical and fluid connectors switches, circuit breakers, and screws), markings, coding, labeling, and equipment\panel arrangements should be standardized as much as practical. This will simplify operational and maintenance procedures, reduce the number of tools required, crew errors, crew training requirements, and maintenance skill requirements. Each common usage also reduces total sparing levels and design documentation. This standardization need not be a complex or involved process. If practical, off-the-shelf equipment should be used.

2.3 GENERAL DESIGN REQUIREMENTS
{A}

It shall be demonstrated that performance requirements and safety critical physical requirements given in this document are for the manned spacecraft design via appropriate testing of the parameters and characteritstics.

2.3.1 Simplicity Design Requirements
{A}

The design shall be as simple as possible consistent with the functions desired and the expected service conditions.

2.3.2 Standardization Design Requirements
{A}

The system shall be designed to adhere to the following standardization requirements:

a. Hardware Operation Standardization - The operation of crew-use equipment shall be standardized so that similar applications use the similar types of hardware.

b. Computer Procedures Standardization - The operating procedures shall be standardized so that similar applications use similar user/computer procedures.

Table of Contents

		Page
3.0	**ANTHROPOMETRY AND BIOMECHANICS**	**3-1**
3.1	**INTRODUCTION**	**3-1**
3.1.1	Scope	3-1
3.1.2	Terminology	3-1
3.2	**GENERAL ANTHROPOMETRICS & BIOMECHANICS RELATED DESIGN CONSIDERATIONS**	**3-1**
3.2.1	Anthropometric Database Design Considerations	3-2
3.2.2	Application of Anthropometric Data Design Considerations	3-6
3.2.3	Variabiliry In Human Body Size Design Considerations	3-6
3.2.3.1	Microgravity Effects Design Considerations	3-6
3.2.3.2	Inter-Individual Variation Design Considerations	3-8
3.2.3.3	Secular Changes Design Considerations	3-9
3.3	**ANTHROPOMETRIC AND BIOMECHANICS RELATED DESIGN DATA**	**3-9**
3.3.1	Body Size	3-9
3.3.1.1	Introduction	3-9
3.3.1.2	Body Size Design Considerations	3-10
3.3.1.3	Body Size Data Design Requirements	3-10
3.3.2	Joint Motion	3-10
3.3.2.1	Introduction	3-10
3.3.2.2	Joint Motion Design Considerations	3-10
3.3.2.2.1	Application of Data Design Considerations	3-10
3.3.2.2.2	Multi-Joint Versus Single Joint Data Design Considerations	3-23

3.3.2.2.3 Gravity Environment Design Considerations 3-23

3.3.2.3 Joint Motion Data Design Requirements 3-23

3.3.2.3.1 Joint Motion Data For Single Joint Design Requirements 3-23

3.3.2.3.2 Joint Motion Data For Two Joint Design Requirements 3-23

3.3.3 Reach 3-23

3.3.3.1 Introduction 3-23

3.3.3.2 Reach Design Considerations 3-28

3.3.3.2.1 Gravity Condition Design Considerations 3-28

3.3.3.2.2 Body Posture Design Considerations 3-28

3.3.3.2.3 Restraint Design Considerations 3-29

3.3.3.2.4 Task Type Design Considerations 3-29

3.3.3.2.5 Clothing Design Considerations 3-29

3.3.3.2.6 Crewmember Size Design Considerations 3-30

3.3.3.3 Reach Data Design Requirements 3-30

3.3.3.3.1 Functional Reach Design Requirements 3-30

3.3.3.3.2 Strike Reach Envelope Data Design Requirements 3-54

3.3.4 Neutral Body Posture 3-54

3.3.4.1 Introduction 3-54

3.3.4.2 Neutral Body Posture Design Considerations 3-54

3.3.4.3 Neutral Body Posture Data Design Requirements 3-54

3.3.5 Body Surface Area 3-54

3.3.5.1 Introduction 3-54

3.3.5.2 Body Surface Area Design Considerations 3-58

3.3.5.3 Body Surface Area Data Design Requirements 3-58

3.3.6 Body Volume 3-58

3.3.6.1 Introduction 3-58

3.3.6.2 Body Volume Data Design Considerations 3-58

3.3.6.3 Body Volume Data Design Requirements 3-59

3.3.6.3.1 Whole-Body Volume Data Design Requirements 3-59

3.3.6.3.2 Body Segment Volume Data Design Requirements 3-59

3.3.7 Body Mass Properties 3-59

3.3.7.1 Introduction 3-59

3.3.7.2 Body Mass Properties Design Considerations 3-61

3.3.7.3 Body Mass Properties Data Design Requirements 3-61

3.3.7.3.1 Body Mass Data Design Requirements 3-61

3.3.7.3.1.1 Whole-Body Mass Data Design Requirements 3-61

3.3.7.3.1.2 Body Segment Mass Data Design Requirements 3-61

3.3.7.3.2 Center of Mass Data Design Requirements 3-61

3.3.7.3.2.1 Whole-Body Center of Mass Data Design Requirements 3-61

3.3.7.3.2.2 Body Segments Center of Mass Data Design Requirements 3-68

3.3.7.3.3 Moment of Inertia Data Design Requirements 3-68

3.3.7.3.3.1 Whole-Body Moment of Inertia Data Design Requirements 3-68

3.3.7.3.3.2 Body Segments Moment of Inertia Data Design Requirements . . 3-68

3.0 ANTHROPOMETRY AND BIOMECHANICS
{A}

3.1 INTRODUCTION
{A}

3.1.1 Scope
{A}

This section presents information about human body size, posture, movement, surface area, volume, and mass.

(Refer to Paragraph 4.9, Strength, for information in human strength).

For purposes of this document, body dimensions and mobility descriptions are limited to the range of personnel considered most likely to be space module crewmembers and visiting personnel. It is assumed that these personnel will be in good health, fully adult in physical development, and an average age of 40 years. A wide range of ethnic and racial backgrounds may b represented, and crewmembers may be either male or female. The dimensional data in Paragraph 3.3.1, Body Size, are estimates of the size of crewmembers in the year 2000.

Data included in this document have been primarily measured on the ground (1-G environment). Where possible, guidelines are provided for relating these data to spaceflight acceleration regimes (from hypergravity to microgravity).

The scope of this section is focused and limited to basic descriptive data, rather than workspace design requirements.

(Refer to Section 8.0, Architecture, Section 9.0, Workstations, and Section 10.0, Activity Centers for specific crew station design considerations and requirements).

3.1.2 Terminology
{A}

The disciplines of anthropometry and biomechanics have a specialized vocabulary of terms with specific meanings for designating points and distances of measurement, range, direction of motion, and mass. General anthropometric terminology is defined in Appendix B of Volume 2. Anatomical and anthropometric planes and landmarks are illustrated in Figures 3.1.2-1, -2, -3, and -4. Body segments and the planes defining these segments are defined in Figure 3.1.2-5.

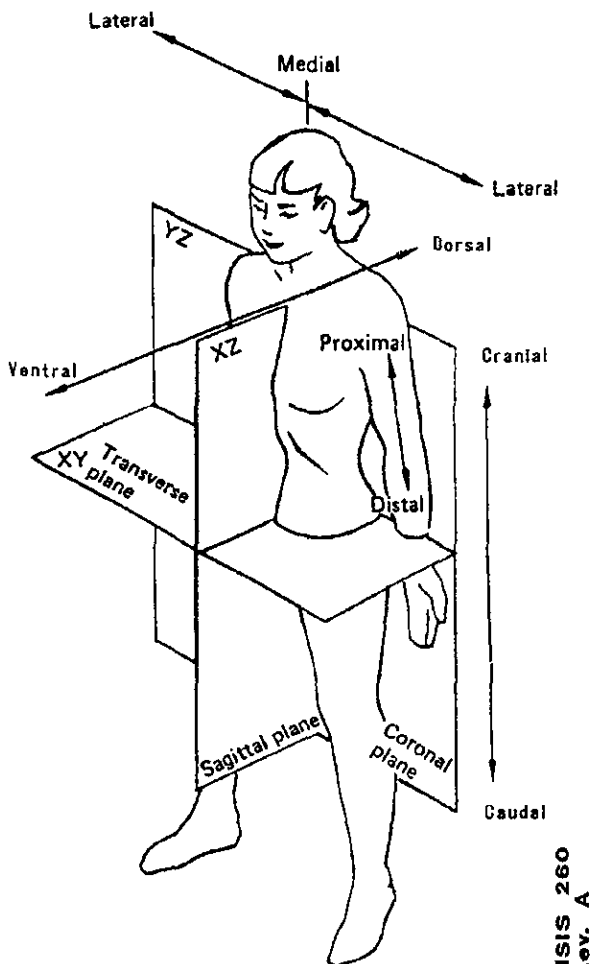

MSIS 260 Rev. A

Reference: 16, page III-78
With Updates

Figure 3.1.2-1. Anatomical Planes and Orientations

3.2 GENERAL ANTHROPOMETRICS & BIOMECHANICS RELATED DESIGN CONSIDERATIONS
{A}

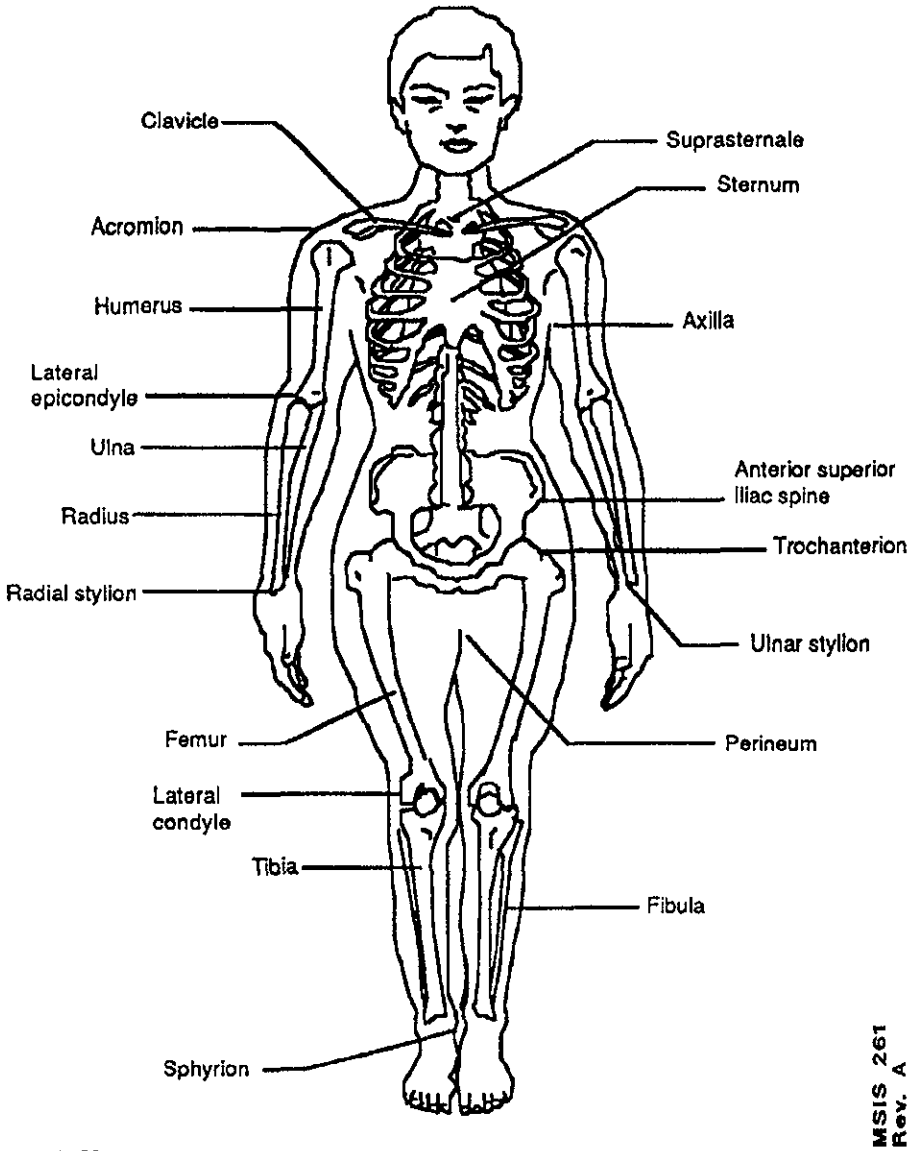

Reference: 16, 111-79
With Updates

Figure 3.1.2-2. Anatomical and Anthropometric Landmarks

3.2.1 Anthropometric Database Design Considerations

{A}

The following are considerations that must be made when using and applying anthropometric data.

a. Percentile Range - Design and sizing of space modules should ensure accommodation, compatibility, operability, and maintainability by the user population. Generally, design limits are based on a range of the user population from the 5th percentile values for critical body dimensions, as appropriate. The use of this range will theoretically provide coverage for 90% of the user population for that dimension.

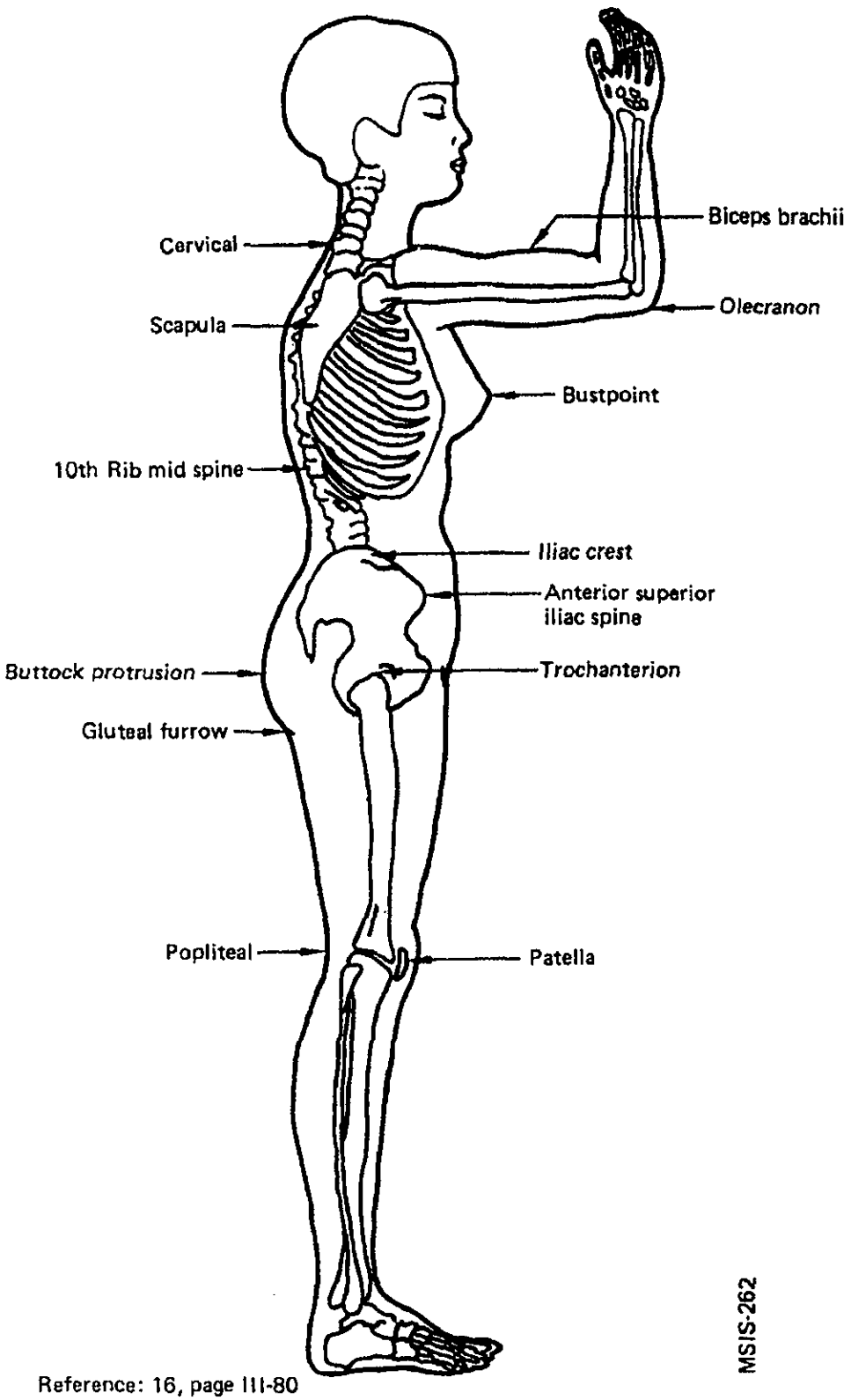

Reference: 16, page III-80

Figure 3.1.2-3. Anatomical and Anthropometric Landmarks

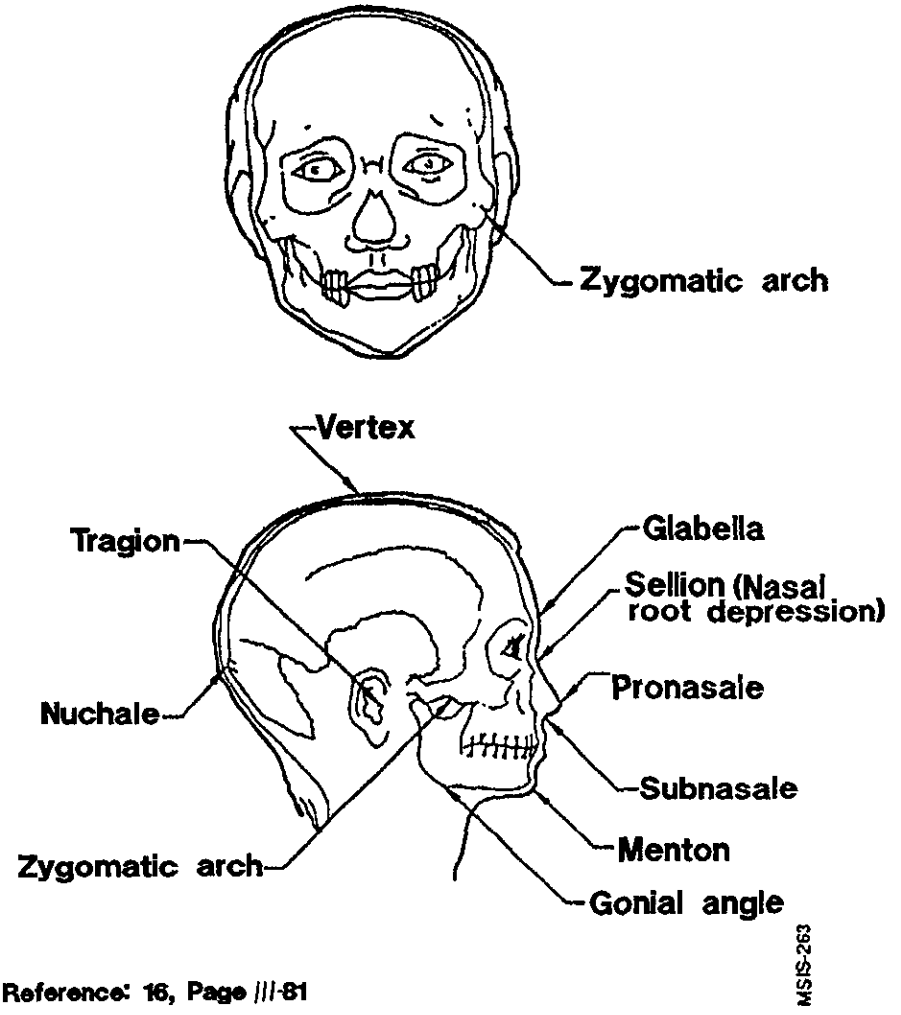

Reference: 16, Page III-81

Figure 3.1.2-4 Anthropometric Landmarks of the Head and Face

b. User Population Definition - Anthropometric data should be established form a survey of the actual user population. In the case of space programs, it is difficult to define the user population. Past space programs have involved a small, select, and easily defined group. As the space program expands, the user population will expand and change. With improved environmental controls, physical fitness will be a less important criterion. Skills and knowledge will be more of a factor in selection. International participation will also influence the character of the user population. In this document, the user population has not been defined. Data are provided for the 5th percentile Asian Japanese and the 95th percentile White or Black American male projected to the year 2000. This does not necessarily define the 5th and 95th percentile of the user population. The data in this document are meant only to provide information on the size ranges of people of the world. The Japanese female represents some of smaller people of the world and the American male some of the larger.

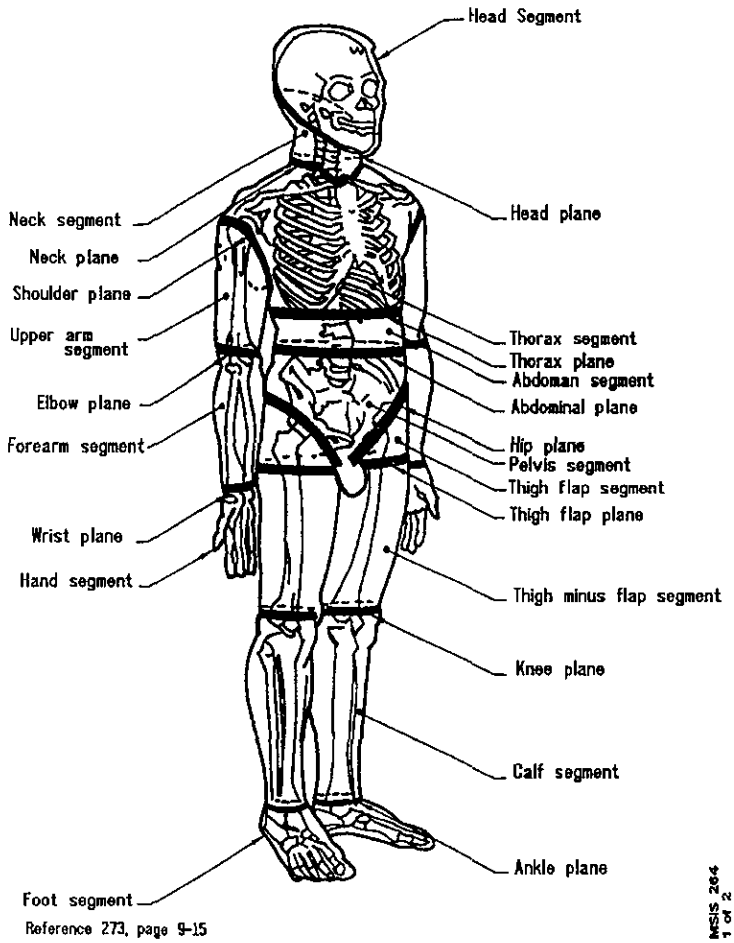

Figure 3.1.2-5 Illustrative View of Body Segments and Planes of Segmentation

Plane Definitions

Head plane: A simple plane that passes through the right and left gonion points and nuchale.

Neck plane: A compound plane in which a horizontal plane originates at cervical and passes anteriorly to intersect with the second plane. The second plane originates at the lower of the two clavicle landmarks and passes superiorly at a 45 degree angle to intersect the horizontal plane.

Thorax plane: A simple transverse plane that originates at the 10th rib midspine landmark and passes horizontally through the torso.

Abdominal plane: A simple transverse plane originating at the higher of the two illica crest landmarks and continuing horizontally through the torso.

Hip plane: A simple plane originating midsagittaly on the perineal surface and passing superiorly and laterally midway between the anterior superior iliac spine and trochanterion landmarks, paralleling the right and left inguinal ligaments.

Thigh flap plane: A simple plane originating at the gluteal furrow landmark and passing horizontally through the thigh.

Knee plane: A simple plane originating at the lateral femoral epicondyle and passing horizontally through the knee.

Ankle plane: A simple plane originating at the sphyrion landmark and passing horizontally through the ankle.

Shoulder plane: A simple plane originating at the acromion landmark and passing inferiorly and medially through the anterior and posterior scye point marks at the axillary level.

Elbow plane: A simple plane originating at the olecranon landmark and passing through the medial and lateral humeral epicondyle landmarks.

Wrist plane: A simple plane originating at the ulnar and radial styloid landmarks and passing throught the wrist perpendicular to the long axis of the forearm.

Reference: 273, Page 9-15

MSIS-264
2 of 2

Figure 3.1.2-5. Illustrative View of Body Segments and Planes of Segmentation (Continued)

Development of a predicted user population size range requires a statistical combination of an estimated mix of these data.

c. Misuse of the 50th Percentile - There is an erroneous tendency to consider the 50th percentile dimensional data as sufficient to accommodate the majority of users. This must not be done. The 50th percentile dimensions will accommodate only a narrow portion of the population, not a majority of the users. The full size range of users must be considered.

d. Summation of Segment Dimensions - Caution must be taken when combining body segment dimensions. The 95th percentile arm length, for instance, is not the addition of the 95th percentile shoulder-to-elbow length plus the 95th percentile elbow-to-hand length. The actual 95th percentile arm length will be somewhat less. The 95th percentile individual is not composed of 95th percentile segments. The same is true for any percentile individual.

(Refer to Reference 16, page VIII-5, for a more complete discussion of segment combinations).

e. Percentiles within a category of data are exclusive. For example, a person who is 5th percentile body size does not necessarily have 5th percentile reach or joint movement.

3.2.2 Application of Anthropometric Data Design Considerations

{A}

Equipment, whether it be a workstation or clothing, must fit the user population. The user population will vary in size, and the equipment design must account for this range of sizes. There are three ways in which a design will fit the user:

a. Single Size For All - A single size may accommodate all members of the population. A workstation which has a switch located within the reach limit of the smallest person, for instance, will allow everyone to reach the switch.

b. Adjustment - The design can incorporate an adjustment capability. The most common example of this is the automobile seat.

c. Several Sizes - Several sizes of equipment may be required to accommodate the full population size-range. This is usually necessary for equipment or personal gear that must closely conform to the body such as clothing and space suits.

All three situations require the designer to use anthropometric data.

3.2.3 Variability In Human Body Size Design Considerations

{A}

3.2.3.1 Microgravity Effects Design Considerations

{O}

The effects of weightlessness on human body size are summarized below and are discussed in greater detail in Figures 3.2.3.1-1 and 3.2.3.1-2. The primary anthropometry effects of microgravity are as follows:

a. Height Increase - Stature increases approximately 3%. This is the result of spinal decompression and lengthening.

b. Neutral Body Posture - The relaxed body immediately assumes a characteristic neutral body posture.

(Refer to Paragraph 3.3.4, Neutral Body Posture, for detailed information).

Parameter	Anthropometric change		
		Long-term mission (more than 14 days)	
	Short-term mission (1 to 14 days)	Pre vs. during mission	Pre vs. post-mission
Height	Slight increase during first week (~ 1.3 cm or 0.5 in). Height returns to normal *R+O Increases caused by spine lengthening	Increases during first 2 weeks then stabilizes at approximately 3% of pre-mission baseline. Increases caused by spine lengthening	Returns to normal on R+O
Circumferences	Circumference changes in chest, waist, and limbs. See Figure 3.2.3.1-2. for chest and waist changes. Changes due primarily to fluid shifts.		
Mass	Postflight weight losses average 3.4%; about 2/3 of the loss is due to water loss, the remainder due to loss of lean body mass and fat. Center of mass shifts headward approximately 3-4 cm (1-2 in.) See Paragraph 3.3.7.3.2.1 for details	Inflight weight losses average 3-4% during first 5 days, thereafter, weight gradually declines for the remainder of the mission. Early inflight losses are probably due to loss of fluids; later losses are metabolic. Center of mass shifts headward Approximately 3-4 cm (1-2 in)	Rapid weight gain during first 5 days postflight, mainly due to replenishment of fluids. Slower weight gain from R+5 to R+2 or 3 weeks
Limb volume	Inflight leg volume decreases exponentially during first mission day; thereafter, rate of decrease declines until reaching a plateau within 3-5 days. Postflight decrements in leg volume up to 3%; rapid increase immediately postflight, followed by slower return to pre-mission baseline.	Early inflight period same as short missions. Leg volume may continue to decrease slightly throughout mission. Arm volume decreases slightly.	Rapid increase in leg volume immediately postflight, followed by slower return to pre-mission baseline.
Posture	Immediate assumption of neutral body posture (see Paragraph 3.3.4)	Immediate assumption of neutral body posture (see Paragraph 3.3.4)	Rapid return to pre-mission posture.

Reference: 16, Chapter 1
208, pages 132-133

* Recovery day plus post mission days

MSIS-265

Figure 3.2.3.1-1. Anthropometric Changes in Weightlessness

c. Body Circumference Changes - Body circumference changes occur in microgravity such as shown in Figure 3.2.3.1-2. These changes are due to fluid shifts toward the head.

d. Mass Loss - The total mass of the body decreases by 3% to 4%. This is due primarily to loss of body fluids and, somewhat, to atrophy and loss of the mass of muscles that were used in 1-G (muscle mass loss is dependent on exercise regimes).

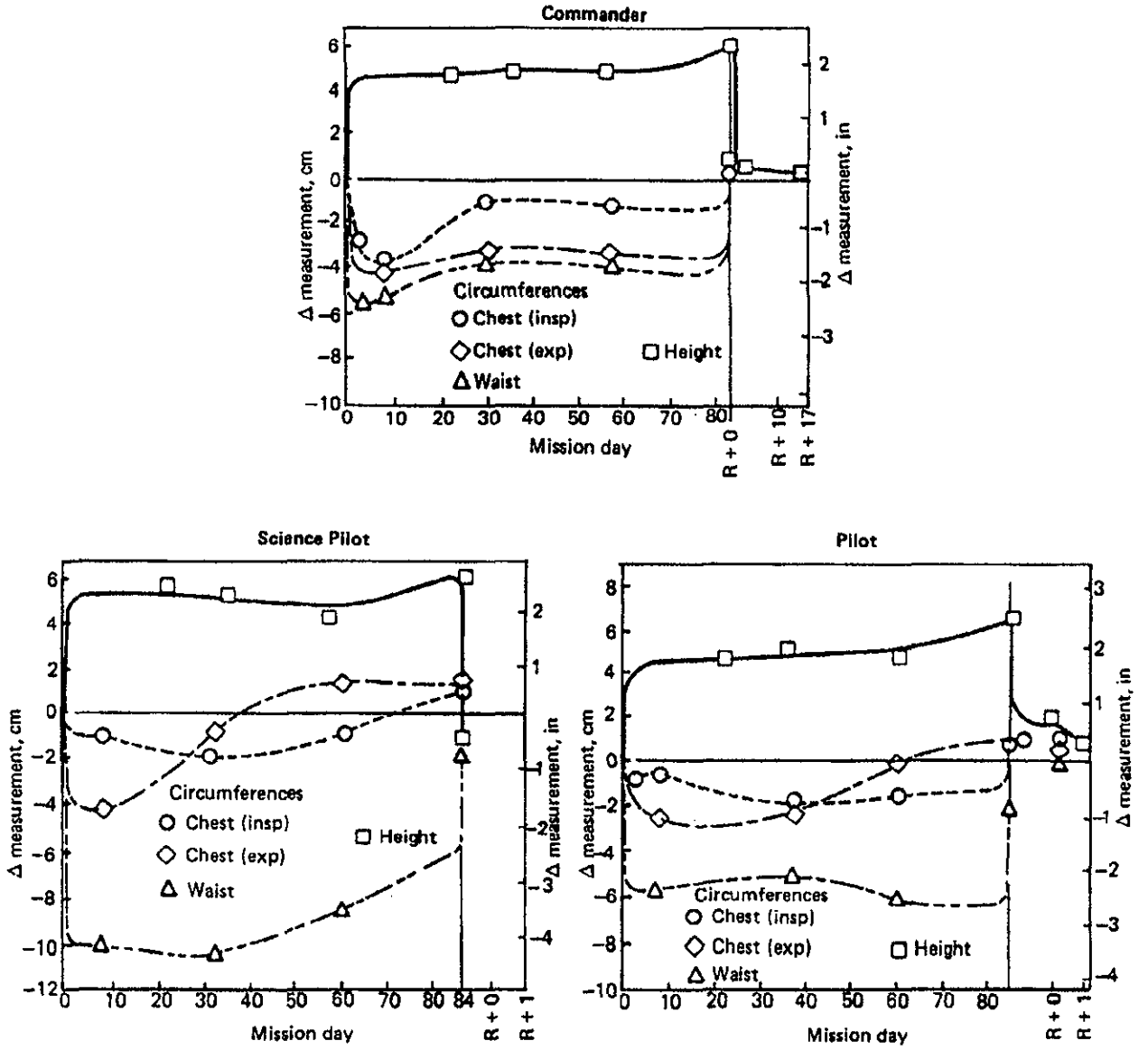

Reference: 16, Figure 19 and 20, page I-28 and 29

Figure 3.2.3.1-2. Micro-Gravity Changes in Height, Waist, and Chest Measured on Skylab Crewmen: One-G Measurements as a Baseline

MSIS-266

3.2.3.2 Inter-Individual Variation Design Considerations

(A)

The two major factors of inter-individual variations are sex and race. The following general rules apply to the anthropometric variations due to sex and race:

a. Sex Variations - Female measurements average about 92% of comparable male measurements (within race). Average female weight is about 75% of male weight.

b. Racial Variations - Blacks and Whites are very similar in terms of height and weight measurements. The average torso measurement of Whites is longer than Blacks and limbs are shorter. Asians are generally shorter and lighter than Whites and Blacks. Most of this stature difference is in leg length. Asian facial dimensions may be larger in proportion to height.

Because of these variations, the extremes of the world population size range is represented in this document by the large (95th percentile) White or Black American male and the small (5th percentile) Asian Japanese female.

3.2.3.3 Secular Changes Design Considerations

{A}

For typical long-term space module design studies, it is appropriate to estimate the body dimensions of a future population of crew, passengers, and even the ground crew. Past experience has demonstrated that there is a historical change in average height, arm length, weight, and many other dimensions. This type of human variation, occurring from generation to generation over time, is usually referred to as secular change. Whether the effect results from better nutrition, improved health care, or some biological selection process has not been determined.

The validity of the design requirements for the actual operational years of the space module depends on the accuracy of the secular trend estimation, the basic assumptions concerning the baseline crew population, and the operational life of the system.

For this standard, an operational year of 2000 and a crewmember age of 40 years has been selected. The secular growth rates of stature used to predict the year 2000 population are shown in Figure 3.2.3.3-1. These secular growth trends must be validated periodically.

3.3 ANTHROPOMETRIC AND BIOMECHANICS RELATED DESIGN DATA

{A}

3.3.1 Body Size

{A}

3.3.1.1 Introduction

{A}

This section provides specific body distances, dimensions, contours, and techniques for use in developing design requirements. There is no attempt to include all potentially useful anthropometric data in this document because much of these data are already available in convenient published form such as Reference 16. Rather, one description set of the size range for the projected crewmember population is presented.

The dimensions apply to nude or lightly clothed persons.

(Refer to Paragraph 14.3, EVA Anthropometry, for dimensions for crewmembers wearing space suits).

	Stature secular growth rate (per decade)
American male	1.0 cm (0.4 in)
Japanese female	2.6 cm (1.0 in)

References: 16, page III-85
308, Table 2

MSIS-267

Figure 3.2.3.3-1. Assumed Secular Growth Rate of Stature

3.3.1.2 Body Size Design Considerations

{A}

The following are considerations that should be made in applying the body size data:

a. Effects of Clothing - In a controlled IVA environment there is little need for heavy, thick clothing. For most practical purposes, therefore, there is no need to consider the effect of IVA clothing on body size. When an individual must wear an EVA pressure garment or a space suit, body dimensions will be affected drastically. In this case, dimensional studies must be made for the user population wearing the garment. These data must then be substituted for unclothed or lightly clothed dimensions.

b. Microgravity - the dimensions in Paragraph 3.3.1.3 apply to 1-G conditions only. Notations are made on appropriate dimensions that provide guidelines for estimating microgravity dimensions.

(Refer to Paragraph 3.2.3.1, Microgravity Effects Design Considerations, for more detailed discussion of microgravity effects).

3.3.1.3 Body Size Data Design Requirements

{A}

Dimensions of the year 2000, 40 year-old White or Black American male and the 40 year-old Asian Japanese female are given in Figure 3.3.1.3-1. The data in this Figure shall be used as appropriate to achieve effective integrations of the crew and space systems. The dimensions apply to 1-G conditions only.

Dimensional data estimates for the year 2000 White or Black American female crewmember cannot be specified at this time due to insufficient data.

(Refer to Reference 16, Chapter III, Appendix B, for dimensional data for the 1985 American female).

3.3.2 Joint Motion

{A}

This section provides information for developing design requirements related to biomechanics, particularly skeletal joint angular motion capabilities and limitations. Joint motion data can be used to determine possible positions for the various parts of body.

(Refer to Paragraph 3.3.3, Reach, for functional reach data).

3.3.2.1 Introduction

{A}

3.3.2.2 Joint Motion Design Considerations

{A}

3.3.2.2.1 Application of Data Design Considerations

{A}

Joint motion capability varies throughout the population. The values given are for the 5th and 95th percentile of the range. The data should be applied in the following manner:

a. 5th Percentile - Use the 5th percentile limit when personnel must position their body to operate or maintain equipment.

b. 95th Percentile - Use the 95th percentile limit when designing to accommodate a full range of unrestricted movement.

Unless the equipment in the workspace is sex-specific (i.e, used by only males or by only females), then the designer should consider the upper and lower limits for the combined male and female population. In general, the female population has a slightly broader range of joint movement.

Female

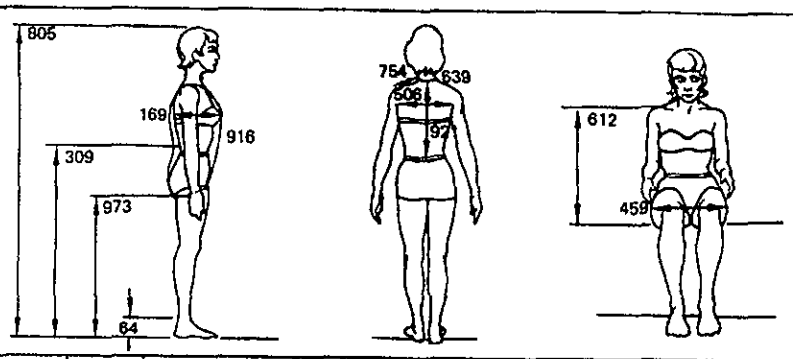

Microgravity notes	No.	Dimension	5th percentile	50th percentile	95th percentile
①	805	Stature	148.9 (58.6)	157.0 (61.8)	165.1 (65.0)
①	973	Wrist height	70.8 (27.9)	76.6 (30.2)	82.4 (32.4)
	64	Ankle height	5.2 (2.0)	6.1 (2.4)	7.0 (2.8)
①	309	Elbow height	92.8 (36.5)	98.4 (38.8)	104.1 (41.0)
	169	Bust depth	17.4 (6.8)	20.5 (8.1)	23.6 (9.3)
①	916	Vertical trunk circumference	136.9 (53.9)	146.0 (57.5)	155.2 (61.1)
② ①	612	Midshoulder height, sitting			
	459	Hip breadth, sitting	30.4 (12.0)	33.7 (13.3)	37.0 (14.6)
①	921	Waist back	35.2 (13.9)	38.1 (15.0)	41.0 (16.1)
	506	Interscye	32.4 (12.8)	35.7 (14.1)	39.0 (15.4)
	639	Neck circumference	34.5 (13.6)	37.1 (14.6)	39.7 (15.6)
	754	Shoulder length	11.3 (4.4)	13.1 (5.1)	14.8 (5.8)
					Values in cm with inches in parentheses

MSIS 268 1 of 13

Notes:

a) Gravity conditions - the dimensions apply to a 1-G condition only. Dimension expected to change significatly due to microgravity are marked.

b) Measurement data - the numbers adjacent to each of the dimension are reference codes. The same codes are in Volume II of Reference 16. Reference 16, Volume II,provides additional data for these measurements plus an explanation of the measurement technique.

Notes for application of dimensions to microgravity conditions:

① Stature increases approximately 3% over the first 3 to 4 days in weightlessness (see Figure 3.2.3.1-2). Almost all of this change appear in the spinal column, and thus affects (increases) other related dimensions, such as sitting height (buttock-vertex), shoulder height -sitting, eye height, sitting, and all dimensions that include the spine.

② Sitting height would be better named as buttock-vertex in microgravity conditions, unless the crewmember were measured with a firm pressure on shoulders pressing him or her against a fixed, flat "sitting" support surface. All sitting dimensions (vertex, eye, shoulder, and elbow) increase in weightlessness by two changes:

a) Relief of pressure on the buttock surfaces (estimated increase of 1.3 to 2.0 cm (0.5 to 0.8 inches).

b) Extension of the spinal column as explained in note ① above (3% of stature on ground).

MSIS 268n

Reference: 274, page 121-128
308
351

Figure 3.3.1.3-1 Body Size of the 40-Year-Old American Male and 40-Year-Old Japanese Female for Year 2000 in One Gravity Conditions (Continued)

40-Year-Old American Male

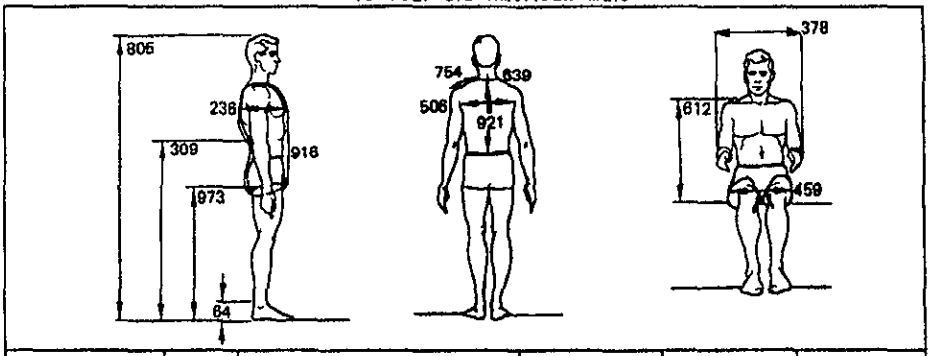

Microgravity notes	No.	Dimension	5th percentile	50th percentile	95th percentile
①	805	Stature	169.7 (66.8)	179.9 (70.8)	190.1 (74.8)
①	973	Wrist height			
	64	Ankle height	12.0 (4.7)	13.9 (5.5)	15.8 (6.2)
①	309	Elbow height			
	236	Bust depth	21.8 (8.6)	25.0 (9.8)	28.2 (11.1)
①	916	Vertical trunk circumference	158.7 (62.5)	170.7 (67.2)	182.6 (71.9)
② ①	612	Midshoulder height, sitting	60.8 (23.9)	65.4 (25.7)	70.0 (27.5)
	459	Hip breadth, sitting	34.6 (13.6)	38.4 (15.1)	42.3 (16.6)
①	921	Waist back	43.7 (17.2)	47.8 (18.8)	51.6 (20.3)
	506	Interscye	32.9 (13.0)	39.2 (15.4)	45.4 (17.9)
	639	Neck circumference	35.5 (14.0)	38.7 (15.2)	41.9 (16.5)
	754	Shoulder length	14.8 (5.9)	16.9 (6.7)	19.0 (7.5)
	378	Forearm-forearm breadth	48.8 (19.2)	55.1 (21.7)	61.5 (24.2)

Values in cm with inches in parentheses

MSIS 268
2 of 13

Notes:

a) Gravity conditions - the dimensions apply to a 1-G condition only. Dimension expected to change significatly due to microgravity are marked.

b) Measurement data - the numbers adjacent to each of the dimension are reference codes. The same codes are in Volume II of Reference 16. Reference 16, Volume II, provides additional data for these measurements plus an explanation of the measurement technique.

Notes for application of dimensions to microgravity conditions:

① Stature increases approximately 3% over the first 3 to 4 days in weightlessness (see Figure 3.2.3.1-2). Almost all of this change appear in the spinal column, and thus affects (increases) other related dimensions, such as sitting height (buttock-vertex), shoulder height -sitting, eye height, sitting, and all dimensions that include the spine.

② Sitting height would be better named as buttock-vertex in microgravity conditions, unless the crewmember were measured with a firm pressure on shoulders pressing him or her against a fixed, flat "sitting" support surface. All sitting dimensions (vertex, eye, shoulder, and elbow) increase in weightlessness by two changes:

a) Relief of pressure on the buttock surfaces (estimated increase of 1.3 to 2.0 cm (0.5 to 0.8 inches).

b) Extension of the spinal column as explained in note ① above (3% of stature on ground).

MSIS 268n

Reference: 274, page 121-128
308
351

Figure 3.3.1.3-1 Body Size of the 40-Year-Old American Male and 40-Year-Old Japanese Female for Year 2000 in One Gravity Conditions (Continued)

Female

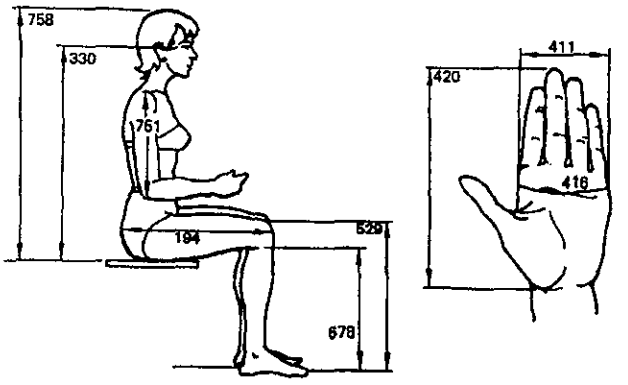

Microgravity notes	No.	Dimension	5th percentile	50th percentile	95th percentile
② ①	758	Sitting height	78.3 (30.8)	84.8 (33.4)	91.2 (35.9)
② ①	330	Eye height, sitting	68.1 (26.8)	73.6 (29.1)	79.6 (31.4)
④	529	Knee height, sitting	41.6 (16.4)	45.6 (17.9)	49.5 (19.5)
	678	Popliteal height	34.7 (13.6)	38.3 (15.1)	41.9 (16.5)
	751	Shoulder-elbow length	27.2 (10.7)	29.8 (11.7)	32.4 (12.8)
	194	Buttock-knee length	48.9 (19.2)	53.3 (21.0)	57.8 (22.7)
	420	Hand length	15.8 (6.2)	17.2 (6.8)	18.7 (7.3)
	411	Hand breadth	6.9 (2.7)	7.8 (3.1)	8.6 (3.4)
	416	Hand circumference	16.5 (6.5)	17.9 (7.0)	19.3 (7.6)
			Values in cm with inches in parentheses		

MSIS 268
3 of 13

Notes:

a) Gravity conditions - the dimensions apply to a 1-G condition only. Dimension expected to change significatly due to microgravity are marked.

b) Measurement data - the numbers adjacent to each of the dimension are reference codes. The same codes are in Volume II of Reference 16. Reference 16, Volume II,provides additional data for these measurements plus an explanation of the measurement technique.

Notes for application of dimensions to microgravity conditions:

① Stature increases approximately 3% over the first 3 to 4 days in weightlessness (see Figure 3.2.3.1-2). Almost all of this change appear in the spinal column, and thus affects (increases) other related dimensions, such as sitting height (buttock-vertex), shoulder height-sitting, eye height, sitting, and all dimensions that include the spine.

② Sitting height would be better named as buttock-vertex in microgravity conditions, unless the crewmember were measured with a firm pressure on shoulders pressing him or her against a fixed, flat "sitting" support surface. All sitting dimensions (vertex, eye, shoulder, and elbow) increase in weightlessness by two changes:

a) Relief of pressure on the buttock surfaces (estimated increase of 1.3 to 2.0 cm (0.5 to 0.8 inches).

b) Extension of the spinal column as explained in note ① above (3% of stature on ground).

④ Knee height-sitting may increase slightly in microgravity due to relief of the pressure on the heel which it occurs when it measured on the ground. The increase is probably not more than 2 to 3 mm (0.1 inch).

MSIS 268a

Reference: 274, page 121-128
308
351

Figure 3.3.1.3-1 Body Size of the 40-Year-Old American Male and 40-Year-Old Japanese Female for Year 2000 in One Gravity Conditions (Continued)

Male

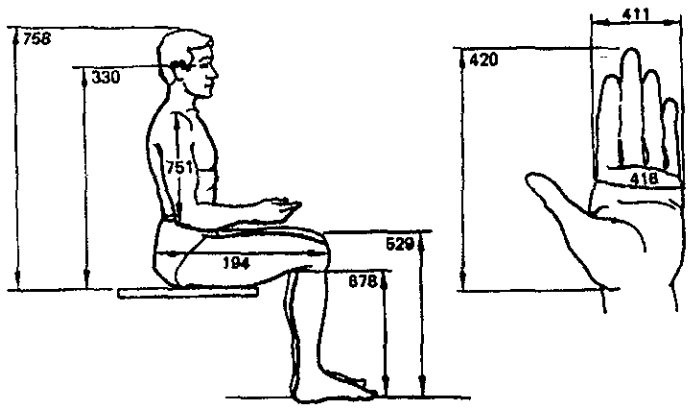

Microgravity notes	No.	Dimension	5th percentile	50th percentile	95th percentile
② ①	758	Sitting height	88.9 (35.0)	94.2 (37.1)	99.5 (39.2)
② ①	330	Eye height, sitting	76.8 (30.3)	81.9 (32.2)	86.9 (34.2)
④	529	Knee height, sitting	52.6 (20.7)	56.7 (22.3)	60.9 (24.0)
	678	Popliteal height	40.6 (16.0)	44.4 (17.5)	48.1 (19.0)
	751	Shoulder-elbow length	33.7 (13.3)	36.6 (14.4)	39.4 (15.5)
	194	Buttock-knee length	56.8 (22.4)	61.3 (24.1)	65.8 (25.9)
	420	Hand length	17.9 (7.0)	19.3 (7.6)	20.6 (8.1)
	411	Hand breadth	8.2 (3.2)	8.9 (3.5)	9.6 (3.8)
	416	Hand circumference	20.3 (8.0)	21.8 (8.6)	23.4 (9.2)
					Values in cm with inches in parentheses

MSIS 268
4 of 13

Notes:

a) Gravity conditions - the dimensions apply to a 1-G condition only. Dimension expected to change significatly due to microgravity are marked.

b) Measurement data - the numbers adjacent to each of the dimension are reference codes. The same codes are in Volume II of Reference 16. Reference 16, Volume II,provides additional data for these measurements plus an explanation of the measurement technique.

Notes for application of dimensions to microgravity conditions:

① Stature increases approximately 3% over the first 3 to 4 days in weightlessness (see Figure 3.2.3.1-2). Almost all of this change appear in the spinal column, and thus affects (increases) other related dimensions, such as sitting height (buttock-vertex), shoulder height-sitting, eye height, sitting, and all dimensions that include the spine.

② Sitting height would be better named as buttock-vertex in microgravity conditions, unless the crewmember were measured with a firm pressure on shoulders pressing him or her against a fixed, flat "sitting" support surface. All sitting dimensions (vertex, eye, shoulder, and elbow) increase in weightlessness by two changes:

a) Relief of pressure on the buttock surfaces (estimated increase of 1.3 to 2.0 cm (0.5 to 0.8 inches).

b) Extension of the spinal column as explained in note ① above (3% of stature on ground).

④ Knee height-sitting may increase slightly in microgravity due to relief of the pressure on the heel which it occurs when it measured on the ground. The increase is probably not more than 2 to 3 mm (0.1 inch).

MSIS 268o

Reference: 274, page 121-128
308
351

Figure 3.3.1.3-1 Body Size of the 40-Year-Old American Male and 40-Year-Old Japanese Female for Year 2000 in One Gravity Conditions (Continued)

Female

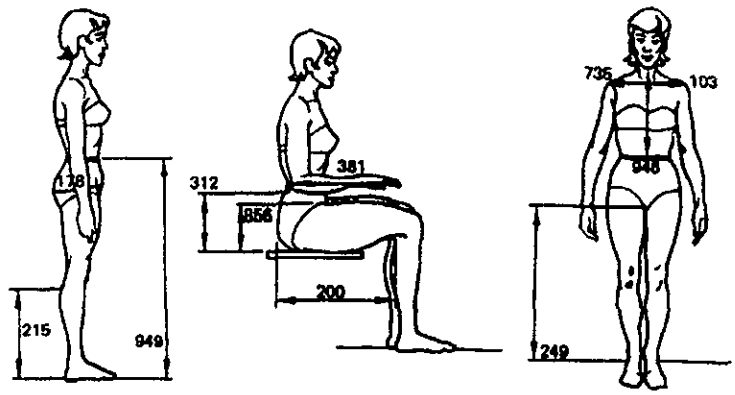

Microgravity notes	No.	Dimension	5th percentile	50th percentile	95th percentile
	949	Waist height	90.1 (35.5)	96.7 (38.1)	103.4 (40.7)
	249	Crotch height	65.2 (25.7)	70.6 (27.8)	76.1 (30.0)
	215	Calf height	25.5 (10.0)	28.9 (11.4)	32.3 (12.7)
	103	Biacromial breadth	32.4 (12.8)	35.7 (14.1)	39.0 (15.4)
①	946	Waist front			
	735	Scye circumference	32.3 (12.7)	36.1 (14.2)	39.8 (15.7)
	178	Buttock circumference	79.9 (31.5)	87.1 (34.3)	94.3 (37.1)
① ②	312	Elbow rest height	20.7 (8.2)	25.0 (9.9)	29.3 (11.5)
	856	Thigh clearance	11.2 (4.4)	12.9 (5.1)	14.5 (5.7)
	381	Forearm-hand length	37.3 (14.7)	41.7 (16.4)	44.6 (17.6)
	200	Buttock-popliteal length	37.9 (14.9)	41.7 (16.4)	45.5 (17.9)
					Values in cm with inches in parentheses

MSIS 268
5 of 13
Rev. A

Notes:

a) Gravity conditions - the dimensions apply to a 1-G condition only. Dimension expected to change significatly due to microgravity are marked.

b) Measurement data - the numbers adjacent to each of the dimension are reference codes. The same codes are in Volume II of Reference 16. Reference 16, Volume II,provides additional data for these measurements plus an explanation of the measurement technique.

Notes for application of dimensions to microgravity conditions:

① Stature increases approximately 3% over the first 3 to 4 days in weightlessness (see Figure 3.2.3.1-2). Almost all of this change appear in the spinal column, and thus affects (increases) other related dimensions, such as sitting height (buttock-vertex), shoulder height -sitting, eye height, sitting, and all dimensions that include the spine.

② Sitting height would be better named as buttock-vertex in microgravity conditions, unless the crewmember were measured with a firm pressure on shoulders pressing him or her against a fixed, flat "sitting" support surface. All sitting dimensions (vertex, eye, shoulder, and elbow) increase in weightlessness by two changes:

a) Relief of pressure on the buttock surfaces (estimated increase of 1.3 to 2.0 cm (0.5 to 0.8 inches).

b) Extension of the spinal column as explained in note ① above (3% of stature on ground).

MSIS 268n

Reference: 274, page 121-128
308
351

Figure 3.3.1.3-1 Body Size of the 40-Year-Old American Male and 40-Year-Old Japanese Female for Year 2000 in One Gravity Conditions (Continued)

Male

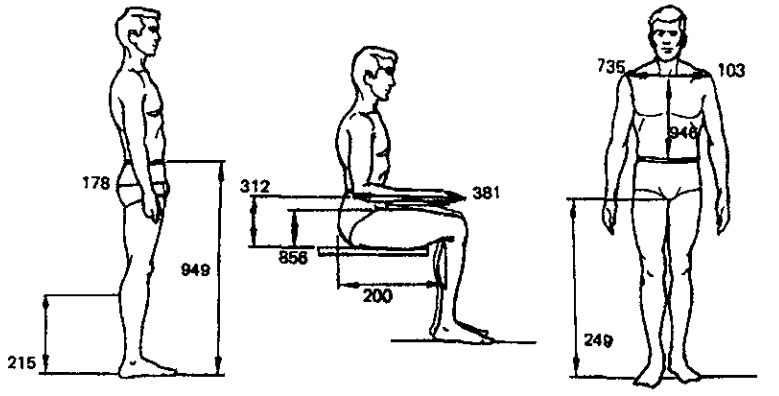

Microgravity notes	No.	Dimension	5th percentile	50th percentile	95th percentile
	949	Waist height	100.4 (39.5)	108.3 (42.6)	116.2 (45.7)
	249	Crotch height	79.4 (31.3)	86.4 (34.0)	93.3 (36.7)
	215	Calf height	32.5 (12.8)	36.2 (14.3)	40.0 (15.7)
	103	Biacromial breadth	37.9 (14.9)	41.1 (16.2)	44.3 (17.5)
①	948	Waist front	37.2 (14.6)	40.9 (16.1)	44.6 (17.5)
	735	Scye circumference	44.4 (17.5)	49.0 (19.3)	53.6 (21.1)
	178	Buttock circumference	91.0 (35.8)	100.2 (39.4)	109.4 (43.1)
① ②	312	Elbow rest height	21.1 (8.3)	25.4 (10.0)	29.7 (11.7)
	856	Thigh clearance	14.5 (5.7)	16.8 (6.6)	19.1 (7.5)
	381	Forearm-hand length			
	200	Buttock-popliteal length	46.9 (18.5)	51.2 (20.2)	55.5 (21.9)
				Values in cm with inches in parentheses	

MSIS 266 6 of 13 REV. A

Notes:

a) Gravity conditions - the dimensions apply to a 1-G condition only. Dimension expected to change significatly due to microgravity are marked.

b) Measurement data - the numbers adjacent to each of the dimension are reference codes. The same codes are in Volume II of Reference 16. Reference 16, Volume II,provides additional data for these measurements plus an explanation of the measurement technique.

Notes for application of dimensions to microgravity conditions:

① Stature increases approximately 3% over the first 3 to 4 days in weightlessness (see Figure 3.2.3.1-2). Almost all of this change appear in the spinal column, and thus affects (increases) other related dimensions, such as sitting height (buttock-vertex), shoulder height -sitting, eye height, sitting, and all dimensions that include the spine.

② Sitting height would be better named as buttock-vertex in microgravity conditions, unless the crewmember were measured with a firm pressure on shoulders pressing him or her against a fixed, flat "sitting" support surface. All sitting dimensions (vertex, eye, shoulder, and elbow) increase in weightlessness by two changes:

a) Relief of pressure on the buttock surfaces (estimated increase of 1.3 to 2.0 cm (0.5 to 0.8 inches).

b) Extension of the spinal column as explained in note ① above (3% of stature on ground).

MSIS 268n

Reference: 274, page 121-128
308
351

Figure 3.3.1.3-1 Body Size of the 40-Year-Old American Male and 40-Year-Old Japanese Female for Year 2000 in One Gravity Conditions (Continued)

Female

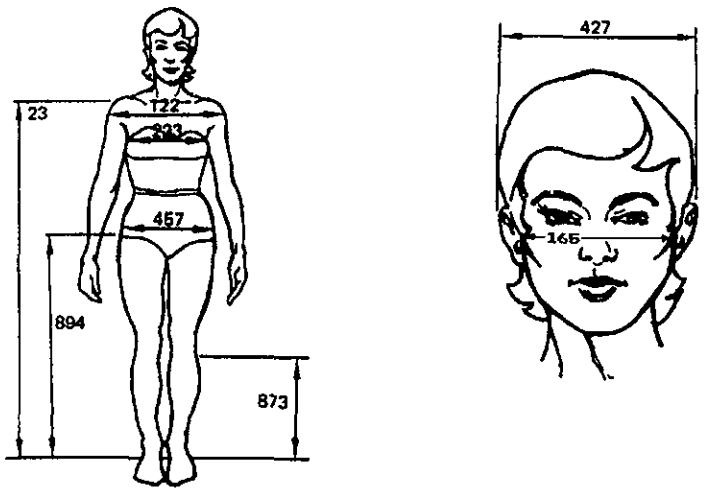

Microgravity notes	No.	Dimension	5th percentile	50th percentile	95th percentile
③ ①	23	Acromial (shoulder) height	119.6 (47.1)	127.1 (50.0)	134.5 (53.0)
	894	Trochanteric height	71.0 (28.0)	76.7 (30.2)	82.4 (32.5)
	873	Tibiale height	35.9 (14.1)	39.3 (15.5)	42.7 (16.8)
	122	Bideltoid (shoulder) breadth	35.6 (14.0)	38.9 (15.3)	42.1 (16.6)
	223	Chest breadth	24.5 (9.7)	26.8 (10.5)	29.0 (11.4)
	457	Hip breadth	30.5 (12.0)	32.9 (12.9)	35.3 (13.9)
	165	Bizygomatic (face) breadth	13.3 (5.2)	14.5 (5.7)	15.7 (6.2)
	427	Head breadth	14.4 (5.7)	15.6 (6.1)	16.8 (6.6)
				Values in cm with inches in parentheses	

MSIS 268
7 of 13
REV. A

Notes:

a) Gravity conditions - the dimensions apply to a 1-G condition only. Dimension expected to change significatly due to microgravity are *marked*.

b) Measurement data - the numbers adjacent to each of the dimension are reference codes. The same codes are in Volume II of Reference 16. Reference 16, Volume II, provides additional data for these measurements plus an explanation of the measurement technique.

Notes for application of dimensions to microgravity conditions:

① Stature increases approximately 3% over the first 3 to 4 days in weightlessness (see Figure 3.2.3.1-2). Almost all of this change appear in the spinal column, and thus affects (increases) other related dimensions, such as sitting height (buttock-vertex), shoulder height-sitting, eye height, sitting, and all dimensions that include the spine.

③ Shoulder or acromial height, sitting or standing, increases during weightlessness due to two factors:

a) Removal of the gravitational pull on the arms

b) Extension of the spinal column as explained in note ① above (3% of stature on ground).

Reference: 274, page 121-128
308
351

MSIS 268p

Figure 3.3.1.3-1 Body Size of the 40-Year-Old American Male and 40-Year-Old Japanese Female for Year 2000 in One Gravity Conditions (Continued)

Male

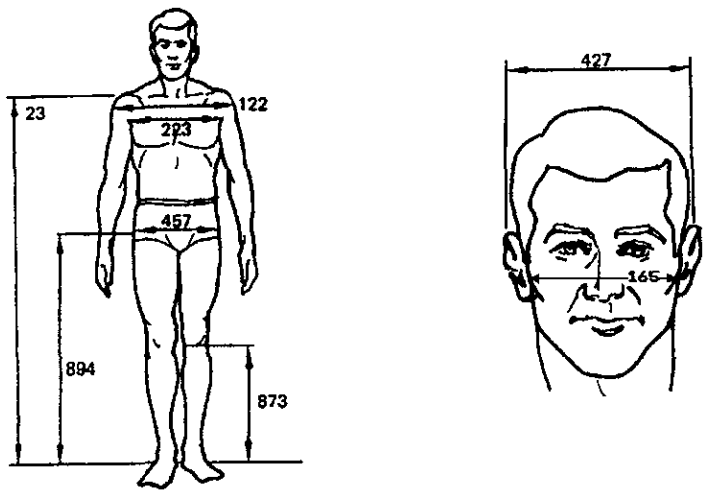

Microgravity notes	No.	Dimension	5th percentile	50th percentile	95th percentile
③ ①	23	Acromial (shoulder) height	138.0 (54.3)	147.6 (58.1)	157.3 (61.9)
	894	Trochanteric height	88.3 (34.8)	95.6 (37.6)	102.9 (40.5)
	873	Tibiale height			
	122	Bideltoid (shoulder) breadth	44.6 (17.6)	48.9 (19.3)	53.2 (20.9)
	223	Chest breadth	29.7 (11.7)	33.2 (13.1)	36.7 (14.4)
	457	Hip breadth	32.7 (12.9)	35.8 (14.1)	39.0 (15.4)
	165	Bizygomatic (face) breadth	13.4 (5.3)	14.3 (5.6)	15.1 (6.0)
	427	Head breadth	14.8 (5.8)	15.7 (6.2)	16.5 (6.5)

Values in cm with inches in parentheses

MSIS 268 8 of 13 REV. A

Notes:

a) Gravity conditions - the dimensions apply to a 1-G condition only. Dimension expected to change significatly due to microgravity are marked.

b) Measurement data - the numbers adjacent to each of the dimension are reference codes. The same codes are in Volume II of Reference 16. Reference 16, Volume II, provides additional data for these measurements plus an explanation of the measurement technique.

Notes for application of dimensions to microgravity conditions:

① Stature increases approximately 3% over the first 3 to 4 days in weightlessness (see Figure 3.2.3.1-2). Almost all of this change appear in the spinal column, and thus affects (increases) other related dimensions, such as sitting height (buttock-vertex), shoulder height-sitting, eye height, sitting, and all dimensions that include the spine.

③ Shoulder or acromial height, sitting or standing, increases during weightlessness due to two factors:

a) Removal of the gravitational pull on the arms

b) Extension of the spinal column as explained in note ① above (3% of stature on ground).

MSIS 268p

Reference: 274, page 121-128
308
351

Figure 3.3.1.3-1 Body Size of the 40-Year-Old American Male and 40-Year-Old Japanese Female for Year 2000 in One Gravity Conditions (Continued)

Female

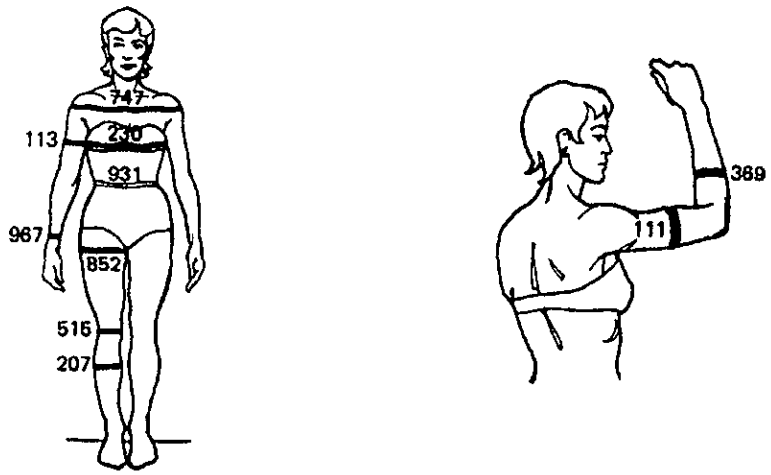

Microgravity notes	No.	Dimension	5th percentile	50th percentile	95th percentile
	747	Shoulder circumference			
	230	Chest circumference	73.2 (28.8)	82.1 (32.3)	90.9 (35.8)
⑥	931	Waist circumference	55.3 (21.8)	63.2 (24.9)	71.2 (28.0)
⑤	852	Thigh circumference	45.6 (17.9)	51.6 (20.3)	57.7 (22.7)
⑤	515	Knee circumference	31.0 (12.2)	34.6 (13.6)	38.2 (15.0)
⑤	207	Calf circumference	30.3 (11.9)	34.1 (13.4)	37.8 (14.9)
	113	Biceps circumference, relaxed	21.8 (8.6)	25.5 (10.1)	29.3 (11.5)
	967	Wrist circumference	13.7 (5.4)	15.0 (5.9)	16.2 (6.4)
	111	Biceps circumference, flexed			
	369	Forearm circumference, relaxed	19.9 (7.8)	22.0 (8.7)	24.1 (9.5)
				Values in cm with inches in parentheses	

MSIS 268
9 of 13

Notes:

a) Gravity conditions - the dimensions apply to a 1-G condition only. Dimension expected to change significatly due to microgravity are marked.

b) Measurement data - the numbers adjacent to each of the dimension are reference codes. The same codes are in Volume II of Reference 16. Reference 16, Volume II, provides additional data for these measurements plus an explanation of the measurement technique.

Notes for application of dimensions to microgravity conditions:

⑤ Leg circumferences and diameters significantly decrease during the first day in microgravity. See Reference 16, Appendix C, for details and measurements of actual persons.

⑥ Waist circumference will decrease in microgravity due to fluid shifts to the upper torso. See Figure 3.2.3.1-2 for measurements on actual persons.

MSIS 268q

Reference: 274, page 121-128
308
351

Figure 3.3.1.3-1 Body Size of the 40-Year-Old American Male and the 40-Year-Old Japanese Female for Year 2000 in One Gravity Conditions (Continued)

Male

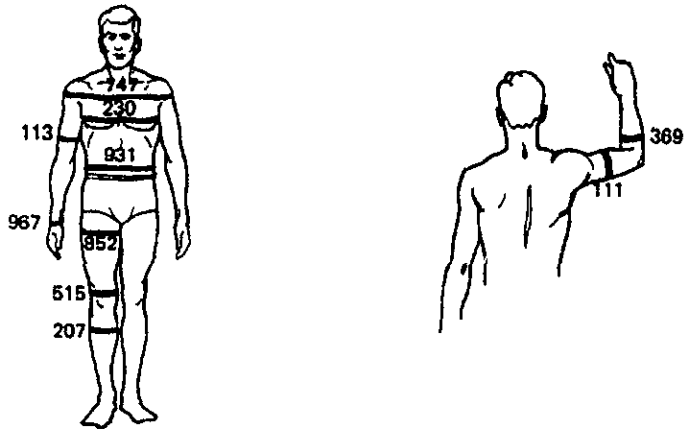

Microgravity notes	No.	Dimension	5th percentile	50th percentile	95th percentile
	747	Shoulder circumference	109.5 (43.1)	119.2 (46.9)	128.8 (50.7)
	230	Chest circumference	89.4 (35.2)	100.0 (39.4)	110.6 (43.6)
⑥	931	Waist circumference	77.1 (30.3)	89.5 (35.2)	101.9 (40.1)
⑤	852	Thigh circumference	52.5 (20.7)	60.0 (23.6)	67.4 (26.5)
⑤	515	Knee circumference	35.9 (14.1)	39.4 (15.5)	42.9 (16.9)
⑤	207	Calf circumference	33.9 (13.3)	37.6 (14.8)	41.4 (16.3)
	113	Biceps circumference, relaxed	27.3 (10.7)	31.2 (12.3)	35.1 (13.8)
	967	Wrist circumference	16.2 (6.4)	17.7 (7.0)	19.3 (7.6)
	111	Biceps circumference, flexed	29.4 (11.6)	33.2 (13.1)	36.9 (14.5)
	369	Forearm circumference, relaxed	27.4 (10.8)	30.1 (11.8)	32.7 (12.9)
				Values in cm with inches in parentheses	

MSIS 268
10 of 13

Notes:

a) Gravity conditions - the dimensions apply to a 1-G condition only. Dimension expected to change significatly due to microgravity are marked.

b) Measurement data - the numbers adjacent to each of the dimension are reference codes. The same codes are in Volume II of Reference 16. Reference 16, Volume II, provides additional data for these measurements plus an explanation of the measurement technique.

Notes for application of dimensions to microgravity conditions:

⑤ Leg circumferences and diameters significantly decrease during the first day in microgravity. See Reference 16, Appendix C, for details and measurements of actual persons.

⑥ Waist circumference will decrease in microgravity due to fluid shifts to the upper torso. See Figure 3.2.3.1-2 for measurements on actual persons.

MSIS 268q

Reference: 274, page 121-128
308
351

Figure 3.3.1.3-1 Body Size of the 40-Year-Old American Male and the 40-Year-Old Japanese Female for Year 2000 in One Gravity Conditions (Continued)

Female

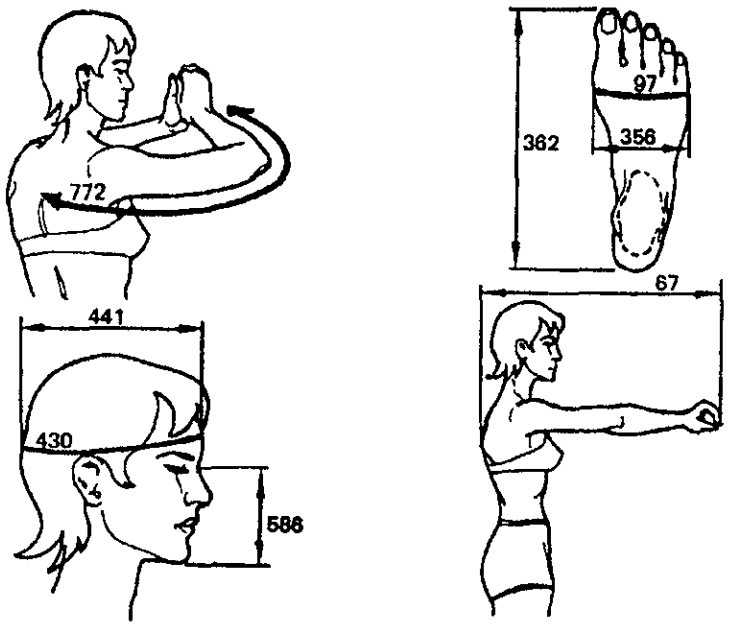

Microgravity notes	No.	Dimension	5th percentile	50th percentile	95th percentile
	67	Thumb-tip reach	65.2 (25.7)	71.6 (28.2)	78.0 (30.7)
	772	Sleeve length			
	441	Head length	16.7 (6.6)	18.2 (7.2)	19.6 (7.7)
	430	Head circumference	53.2 (20.9)	55.2 (21.7)	57.2 (22.5)
	586	Menton-sellion (face) length	9.0 (3.5)	10.8 (4.2)	12.6 (5.0)
	362	Foot length	21.3 (8.4)	22.9 (9.0)	24.4 (9.6)
	356	Foot breadth	8.6 (3.4)	9.3 (3.7)	10.0 (3.9)
	97	Ball of foot circumference	21.0 (8.3)	22.7 (8.9)	24.3 (9.6)
					Values in cm with inches in parentheses

Reference: 274, page 121-128 With Updates
308
351

Notes:

a. Gravity conditions — the dimensions apply to a 1-G condition only. Dimension expected to change significantly due to microgravity are marked.

b. Measurement data — the numbers adjacent to each of the dimensions are reference codes. The same codes are in Volume II of Reference 16. Reference 16, Volume II, provides additional data for these measurements plus an explanation of the measurement technique.

MSIS 268
11 of 13
Rev. A

Figure 3.3.1.3-1 Body of the 40-Year-Old American Male and 40-Year Old Japanese Female for Year 2000 in One Gravity Conditions (Continued)

Male

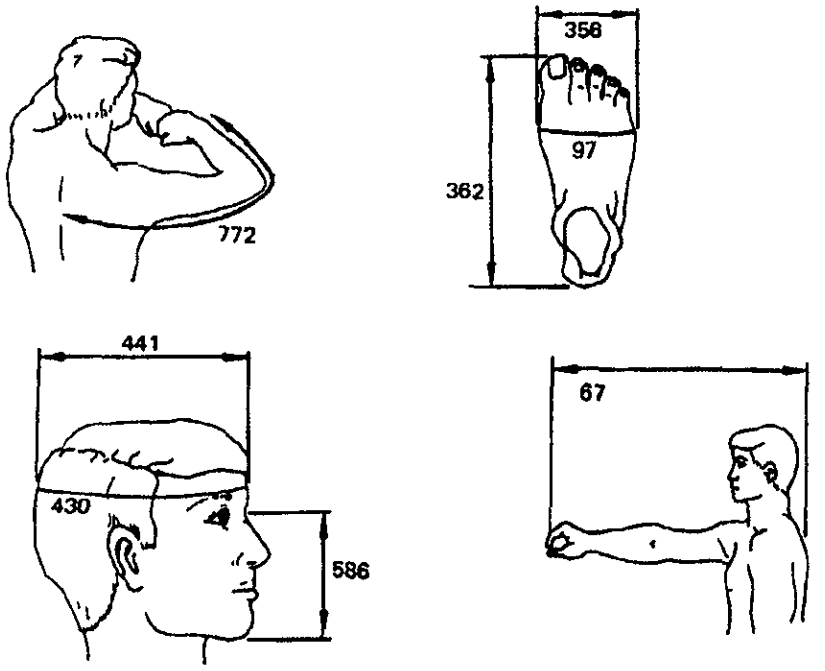

Microgravity notes	No.	Dimension	5th percentile	50th percentile	95th percentile
	67	Thumb-tip reach	74.9 (29.5)	81.6 (32.1)	88.2 (34.7)
	772	Sleeve length	86.2 (33.9)	92.0 (36.2)	97.9 (38.5)
	441	Head length	18.8 (7.4)	20.0 (7.9)	21.1 (8.3)
	430	Head circumference	55.5 (21.8)	57.8 (22.8)	60.2 (23.7)
	586	Menton-sellion (face) length	11.1 (4.4)	12.1 (4.8)	13.1 (5.2)
	362	Foot length	25.4 (10.0)	27.3 (10.8)	29.3 (11.5)
	356	Foot breadth	9.0 (3.6)	9.9 (3.9)	10.7 (4.2)
	97	Ball of foot circumference	23.1 (9.1)	25.1 (9.9)	27.2 (10.7)
			Values in cm with inches in parentheses		

Reference: 274, page 121-128
308
351

Notes:

a. Gravity conditions — the dimensions apply to a 1-G condition only. Dimension expected to change significantly due to microgravity are marked.
b. Measurement data — the numbers adjacent to each of the dimensions are reference codes. The same codes are in Volume II of Reference 16. Reference 16, Volume II, provides additional data for these measurements plus an explanation of the measurement technique.

MSIS-268
12 of 13

Figure 3.3.1.3-1 Body Size of the 40-Year-Old American Male and 40-Year-Old Japanese Female for Year 2000 in One Gravity Conditions (Continued)

3.3.2.2.2 Multi-Joint Versus Single Joint Data Design Consideration

{A}

More often than not, human motion involves interaction of two or more joints and muscles. The movement range of a single joint is often drastically reduced by the movement of an adjacent joint. In other words, joint movement ranges are not always additive. For example, an engineering layout may show (using a scaled manikin) that a foot control is reachable with a hip flexion of 50 degrees and the knee extended (0 degrees flexion). Both of these ranges are within the individual joint ranges as shown in Figure 3.3.2.3.1-1. However, Figure 3.3.2.3.2.-1 shows the hip flexion is reduced by over 30 degrees when the knee is extended. The control would, therefore, not be reachable.

3.3.2.2.3 Gravity Environment Design Considerations

{A}

The joint motion studies were preformed in a 1-G environment. There are no data for the microgravity environment. Indications are that joint motion capability will not be drastically affected in microgravity. Given this, the data in this section can be applied to a microgravity environment.

3.3.2.3 Joint Motion Data Design Requirements

{A}

3.3.2.3.1 Joint Motion Data For Single Joint Design Requirements

{A}

Figure 3.3.2.3.1-1 shows single joint movement ranges for both males and females. These data apply to both 1-G and microgravity environments. These data shall be used as appropriate to ensure the design accommodates the required body movements for the crewmembers.

3.3.2.3.2 Joint Motion Data For Two Joint Design Requirements

{A}

Data to determine the range of movement for two joints are given in Figure 3.3.2.3.2-1. Figure 3.3.2.3.2-1 defines the changes in range of motion of a given joint when supplemented by the movement of an adjacent joint. These data apply to both 1-G and microgravity environments. These data shall be used as appropriate to ensure the design accommodates the required body movements of the crewmembers.

3.3.3 Reach

{A}

3.3.3.1 Introduction

{A}

The following section discusses human body reach limits in terms of functional reach and in terms of body strike envelope. Body strike envelope defines the volume that the extremities (legs, head, arms) of a seated and restrained crewmember will strike when subjected to high accelerations such as during launch and entry

The information in this section is limited to IVA conditions where the crewmember is wearing non-restrictive clothing.

(Refer to Paragraph 14.3, EVA Anthropometry, for EVA functional reach envelopes).

Figure	Joint movement (note b)	Range of motion (degrees)			
		Males (note a)		Females (note a)	
		5th percentile	95th percentile	5th percentile	95th percentile
1	Neck, rotation right	73.3	99.6	74.9	108.8
	Neck, rotation left	74.3	99.1	72.2	109.0
2	Neck, flexion	34.5	71.0	46.0	84.4
	Neck, extension	65.4	103.0	64.9	103.0
3	Neck, lateral right	34.9	63.5	37.0	63.2
	Neck, lateral left	35.5	63.5	29.1	77.2
4	Shoulder, abduction	173.2	188.7	172.6	192.9
5	Shoulder, rotation lat	46.3	96.7	53.8	85.8
	Shoulder, rotation med	90.5	126.6	95.8	130.9
6	Shoulder, flexion	164.4	210.9	152.0	217.0
	Shoulder, extension	39.6	83.3	33.7	87.9
7	Elbow, flexion	140.5	159.0	144.9	165.9
8	Forearm, pronation	78.2	116.1	82.3	118.9
	Forearm, supination	83.4	125.8	90.4	139.5
9	Wrist, radial	16.9	36.7	16.1	36.1
	Wrist, ulnar	18.6	47.9	21.5	43.0
10	Wrist, flexion	61.5	94.8	68.3	98.1
	Wrist, extension	40.1	78.0	42.3	74.7
11	Hip, flexion	116.5	148.0	118.5	145.0
12	Hip, abduction	26.8	53.5	27.2	55.9
13	Knee, flexion	118.4	145.6	125.2	145.2
14	Ankle, plantar	36.1	79.6	44.2	91.1
	Ankle, dorsi	8.1	19.9	6.9	17.4

Reference: 365, Figure3 711 to 713
111

Notes: a. Data was taken 1979 and 1980 at NASA-JSC by Dr. William Thornton and John Jackson. The study was made using 192 males (mean age 33) 22 females (mean age 30) astronaut candidates (see Reference 365)
b. Limb range is average of right and left limb movement.

MSIS-340
1 of 3

Figure 3.3.2.3.1-1. Joint Movement Ranges for Males and Females

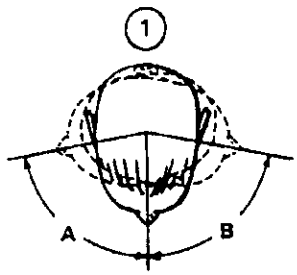

Neck Rotation,
Right (A), Left (B)

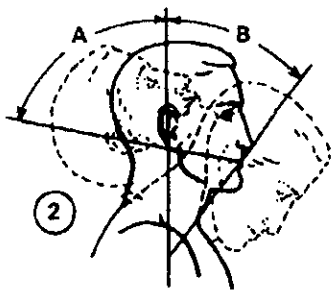

Neck Extension (A),
Flexion (B)

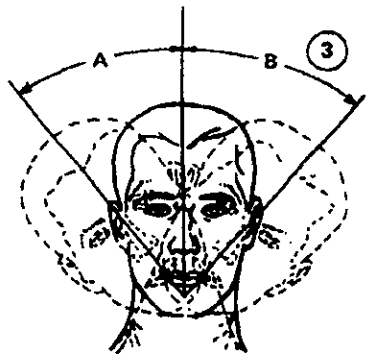

Neck Lateral Bend,
Right (A), Left (B)

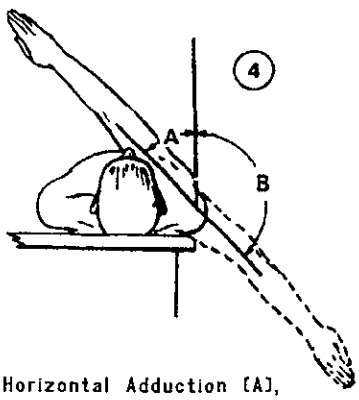

Horizontal Adduction (A),
Horizontal Abduction (B)

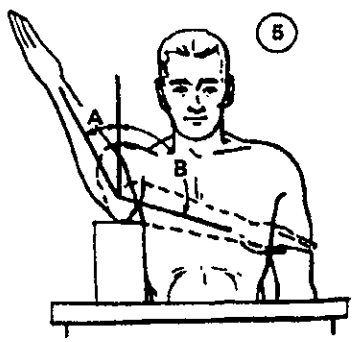

Shoulder Rotation,
Lateral (A), Medial (B)

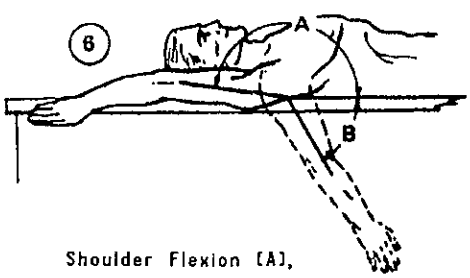

Shoulder Flexion (A),
Extension (B)

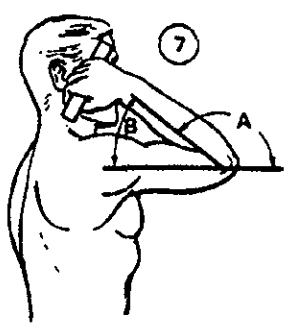

Elbow Flexion (A),
Extension (B)

Reference: 365, Figures 711 to 713 With Updates
111

Notes: Data was taken 1979 and 1980 at NASA-JSC by Dr. William Thornton and John Jackson. The study was made using 192 males (mean age 33) 22 females (mean age 30) astronaut candidates (see Reference 365)

MSIS 340
2 of 3
Rev. A

Figure 3.3.2.3.1-1. Joint Movement Ranges for Males and Females (Continued)

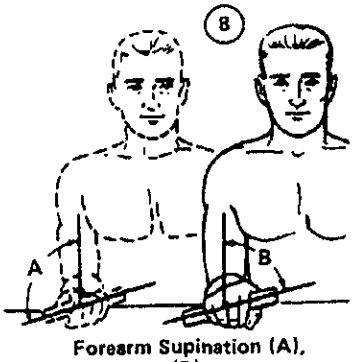

Forearm Supination (A), Pronation (B)

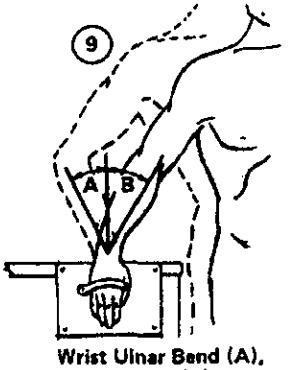

Wrist Ulnar Bend (A), Radial Bend (B)

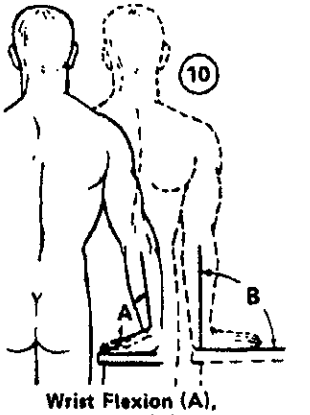

Wrist Flexion (A), Extension (B)

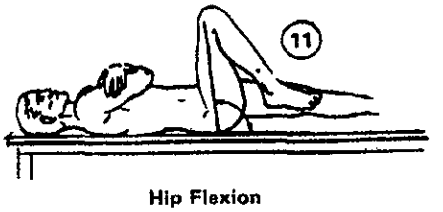

Hip Flexion

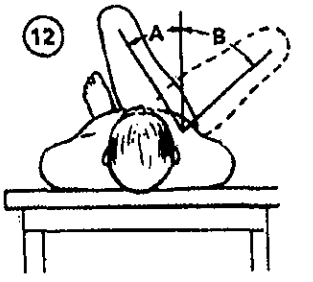

Hip Adduction (A), Abduction (B)

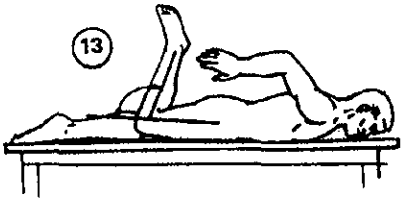

Knee Flexion, Prone

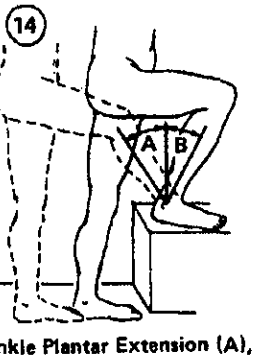

Ankle Plantar Extension (A), Dorsi Flexion (B)

Reference: 365, Figures 711 to 713
111

Notes: Data was taken 1979 and 1980 at NASA-JSC by Dr. William Thornton and John Jackson. The study was made using 192 males (mean age 33) 22 females (mean age 30) astronaut candidates (see Reference 365)

MSIS-340

Figure 3.3.2.3.1-1. Joint Movement Ranges for Males and Females (Continued)

Two-joint movement	Full range of A (degrees)	Change in range of movement of A (degrees)				
		Movement of B (fraction of full range)				
		Zero	1/3	1/2	2/3	Full
Shoulder extension (A) with elbow flexion (B)	59.3 deg		+1.6 deg (102.7%)		+0.9 deg (101.5%)	+5.3 deg (108.9%)
Shoulder flexion (A) with elbow flexion (B)	190.7 deg		−24.9 deg (86.9%)		−36.1 deg (81.0%)	−47.4 deg (75.0%)
Elbow flexion (A) with shoulder extension (A)	152.2 deg			−3.78 deg (97.5%)		−1.22 deg (99.2%)
Elbow flexion (A) with shoulder flexion (B)	152.2 deg		−0.6 deg (99.6%)		−0.8 deg (99.5%)	−69.0 deg (54.7%)
Hip flexion (A) with shoulder flexion (B)	53.3 deg	−35.6 deg* (33.2%)	−24.0 deg (55.0%)		−6.2 deg (88.4%)	−12.3 deg (76.9%)
Ankle plantar flexion (A) with knee flexion (B)	48.0 deg		−3.4 deg (92.9%)		+0.2 deg (100.4%)	+1.6 deg (103.3%)
Ankle dorsiflexion (A) with knee flexion (B)	26.1 deg		−7.3 deg (72.0%)		−2.7 deg (89.7%)	−3.2 deg (87.7%)
Knee flexion (A) with ankle plantar flexion (B)	127.0 deg			−9.9 deg (92.2%)		−4.7 deg (96.3%)
Knee flexion (A) with ankle dorsiflexion (B)	127.0 deg					−8.7 deg (93.0%)
Knee flexion (A) with hip flexion (B)	127.0 deg			−19.6 deg (84.6%)		−33.6 deg (73.5%)

MSIS-289

*The knee joint is locked and the unsupported leg extends out in front of the subject.

Reference: 16, pages VI-12 to VI-15

Note:
The following is an example of how the Figure is to be used. The first entry is read as follows: the shoulder can be extended as far as 59.3 degrees (the mean of the subjects tested) with the elbow in a neutral position (locked in hyperextension). When shoulder extension was measured with the elbow flexed to 1/3 of its full joint range, the mean value of shoulder extension was found to increase by 1.6 degrees, or 102.7% of the base value. The results for other movements and adjacent joint positions are presented in a similar manner.

Figure 3.3.2.3.2-1. Change in Range of Movement With Movement in Adjacent Joint

3.3.3.2 Reach Design Considerations

{A}

3.3.3.2.1 Gravity Condition Design Considerations

{A}

All definitive studies of both static anthropometry and functional reach have been made on the Earth's surface under conditions of standard gravity. However, microgravity and multigravity environments will affect both static anthropometry and functional reach measurements in the following manner:

a. Microgravity Effects - The spine will lengthen under microgravity conditions. This will increase the overhead reach limits. "Downward" reaches are more difficult; there is no gravity assist. Similarly, "upward" reaches will seem easier.

(Refer to Paragraph 3.2.3.1, Microgravity Effects Design Considerations, for details of spinal changes in microgravity).

b. Multi-G Effects - While microgravity may be the constant environment for some space modules, another module, such as the Space Shuttle, may experience accelerations up to 3-G during launch and up to 1.5-G during a typical entry. Any controls or workspace items that must be reached and operated during these times cannot be positioned on the basis of the greater reach capabilities c in microgravity or 1-G. The reach movement restrictions in a multi-G environment are shown in Figure 3.3.3.2.1-1. The designer must keep in mind that any system basically being designed for micro-g use, if it is to be utilized in one-g or multi-g environments, must take into account the reduced reach capability which the user will experience under these conditions.

c. Short Duration, Multi-G Effects - Abrupt high accelerations can cause the extremities of even a securely restrained crewmember flail. In this case, the designer must consider the non-functional and potentially injurious aspects of the reach envelope.

3.3.3.2.2 Body Posture Design Considerations

{A}

In multi-, 1-, or partial gravity environments, standing or seated postures are commonly used for workspace operation. In the seated posture, the reach envelope can be severely restricted if the crewmember is wearing a fixed shoulder harness that does not reel out. Body postures which must be maintained for extended periods of time in 1- or multi-g environments may result in accelerated fatigue problems; e.g., bending over for long periods.

The normal working posture of the body in a microgravity environment differs substantially from that in a 1-G environment. The seated posture is, for all practical purposes, eliminated because the sitting posture is not a natural one under these conditions. The neutral body posture is the basic posture that

Acceleration	Possible reach motion
Up to 4-G	Arm
Up to 5-G (9-G if arm is counter balanced)	Forearm
Up to 8-G	Hand
Up to 10-G	Finger

Reference: 19, Section 2D6, page 1

MSIS-290

Figure 3.3.3.2.1-1. Reach Movements Possible in a Multi-G Environment

should be used in establishing a microgravity workspace layout.

(Refer to Paragraph 3.3.4, Neutral Body-Posture, for a definition of neutral body posture).

(Refer to Paragraph 9.2.4, Human/Workstation Configuration, for information on accommodating the neutral body posture in the workstation).

3.3.3.2.3 Restraint Design Considerations

{O}

While the absence of gravitational forces will usually facilitate rather than restrict body movement, this lack of gravity will leave crewmembers without any stabilization when they exert a thrust or push. Thus, some sort of body restraint system is necessary. Three basic types of body restraint or stabilizing devices have been tested either under neutral buoyancy conditions on Earth and/or actual microgravity conditions in space. These are handhold, waist, and foot restraints. The following is a description of each type of restraint and its effect on reach:

(Refer to Paragraph 11.7.2, Personnel Restraints, for neutral body posture restraints design information).

a. Handhold Restraint - With the handhold restraint, the individual is stabilized by holding onto a handgrip with one hand and performing the reach or task with the other. This restraint affords a fairly wide range of functional reaches, but body control is difficult and body stability is poor.

b. Waist Restraint - A waist restraint (for example, a clamp or belt around the waist) affords good body control and stabilization, but seriously limits the range of motion and reach distances attainable.

c. Foot Restraint - The third basic system restrains the individual by the feet. In Skylab observations and neutral buoyancy test, the foot restraints were judged to be excellent in reach performance, stability, and control. The foot restraint provides a large reach envelope to the front, back, and to the sides of the crewmember. Appreciable forces can often not be exerted due to weak muscles of the ankle rotators. Foot restraints should be augmented with waist or other types of restraints where appropriate.

3.3.3.2.4 Task Type Design Considerations

{A}

The length of a functional arm reach is clearly dependent on the kind of task or operation to be performed by that reach. For example, tasks requiring only fingertip pressure on a pushbutton could be located at or near the outer limits of arm reach as defined by the fingertip. This would be, essentially, absolute maximum functional reach attainable. However, another task may require rotation of a control knob between thumb and forefinger; this would result in a reduction of the above maximum attainable functional reach. Full handgrasp of a control lever would reduce maximum reach even more. Where two-handed operation, greater precision, or continuous operation are required, the task must be located still closer to the operator.

(Refer to Paragraph 9.3, Controls, for further information on types of hand controls).

3.3.3.2.5 Clothing Design Considerations

{A}

Clothing and personal equipment worn on the body can influence functional reach measurements. The effect is most commonly a decrease in reach. This decrease can sometimes be considered if clothing or equipment are especially bulky or cumbersome. Most data on functional reaches have been gathered under so-called light indoor clothing), which do not appreciably affect the measurements.

If space suits are required during any phase of the space module operations, this will necessitate a substantial reduction in any design reach dimensions established for shirtsleeve operations. The extent of these differences would have to be determined from using the specific space suits and gear to be employed in that mission. The information in this section applies only to light, nonrestrictive clothing.

(Refer to Paragraph 14.3, EVA Anthropometry for information on EVA functional reach dimensions).

3.3.3.2.6 Crewmember Size Design Considerations

{A}

Crew stations should accommodate the reach limits of the smallest crewmember. Reach limits are not always defined by overall size, however. For instance, the worst case condition for a constrained (e.g., seated with shoulder harness tight) is a combination of a long shoulder height and a short arm. These statistical variations in proportions are natural and should be accounted for in reach limit definitions. The reach limits in Figure 3.3.3.3.1-1 account for these variations.

3.3.3.3 Reach Data Design Requirements

{A}

3.3.3.3.1 Functional Reach Design Requirements

{A}

Equipment and controls required to perform a task shall be within the reach limit of the crewmember performing the task. The reach limit envelope cannot be considered a working reach envelope. Reach is effected by fatigue and force exerted and there is a marked variation in strength which can be exerted throughout this envelope. Tasks which require strength and dexterity should be located well within the perimeter of the reach limit envelope. This is especially true of repetitious tasks. For strength limitations, see Section 4.9. The following are functional reach limits for persons wearing non-restrictive clothing:

a. Torso Restrained Reach Boundaries - Equipment and controls operated by crewmembers restrained at the torso, shall be within the functional reach boundaries given in Figure 3.3.3.3.1-1. These boundaries shall be adjusted as appropriate to the task conditions:

1. Backrest Angle - The boundaries in Figure 3.3.3.3.1-1 apply when the operator's shoulders are against a flat backrest inclined 13 degrees from vertical. Adjustments shall be made for different backrest angles using the approximations in Figure 3.3.3.3.1-2.

2. Task Type - The functional reach boundaries apply to tasks requiring thumb and forefinger grasp only. Adjustment for other grasp requirements shall be made in accordance with Figure 3.3.3.3.1-6.

b. Microgravity Handhold Restraint - Equipment and controls operated in microgravity by crewmembers using a handhold restraint, shall be within the functional reach boundaries given in Figure 3.3.3.3.1-3. The functional reach boundaries apply to tasks requiring fingertip operation only. Adjustment for other grasp operations shall be made in accordance with Figure 3.3.3.3.1-6.

c. Microgravity Foot Restraint - Equipment and controls operated in microgravity by crewmembers using a foot restraint, shall be within the functional reach boundaries given in Figures 3.3.3.3.1-4 and 3.3.3.3.1-5. The functional reach boundaries apply to tasks requiring fingertip operation only. Adjustment for grasp operations shall be made in accordance with Figure 3.3.3.3.1-6.

Horizontal Plane

Thumb and forefinger grasp boundaries for varying dimensions of A (A positive above SRP)

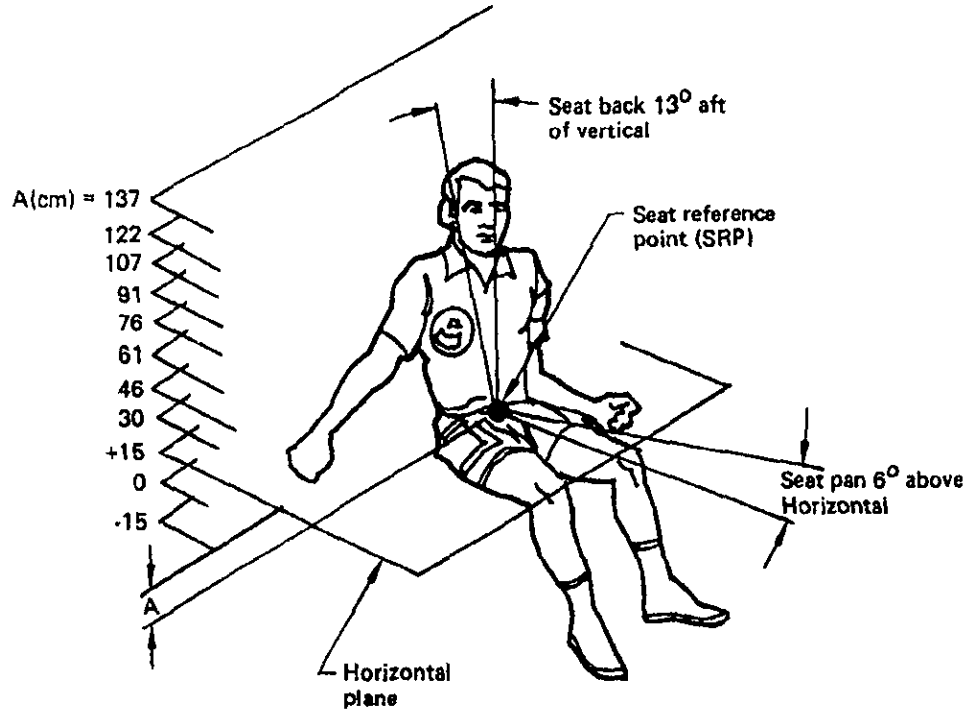

5th percentile outer boundary and inner boundary (innner curve)

50th percentile outer boundary

95th percentile outer boundary

Reference: 310, Pages 35 to 52

Notes:

a. Gravity conditions - the boundaries apply to 1-G conditions only. Microgravity will cause the spine to lengthen, and adjustments should be made based on a new shoulder pivot location.

b. Subjects - the subjects used for this study are representative of the 1967 Air Force population estimates defined in Reference 16, Chapter III

MSIS-288
1 of 19

Figure 3.3.3.3.1-1. Grasp Reach Limits With Right Hand for American Male and Female Populations

Horizontal Plane

Men — 15 cm Horizontal plane (deg)

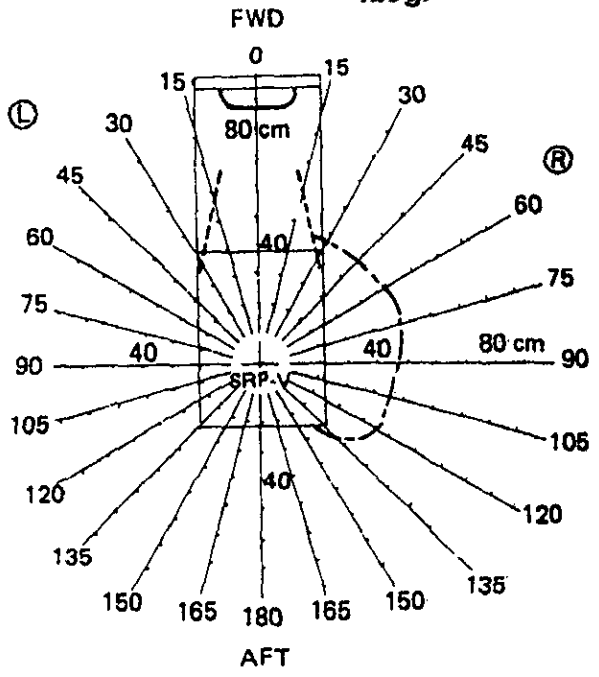

Women — 15 cm Horizontal plane (deg)

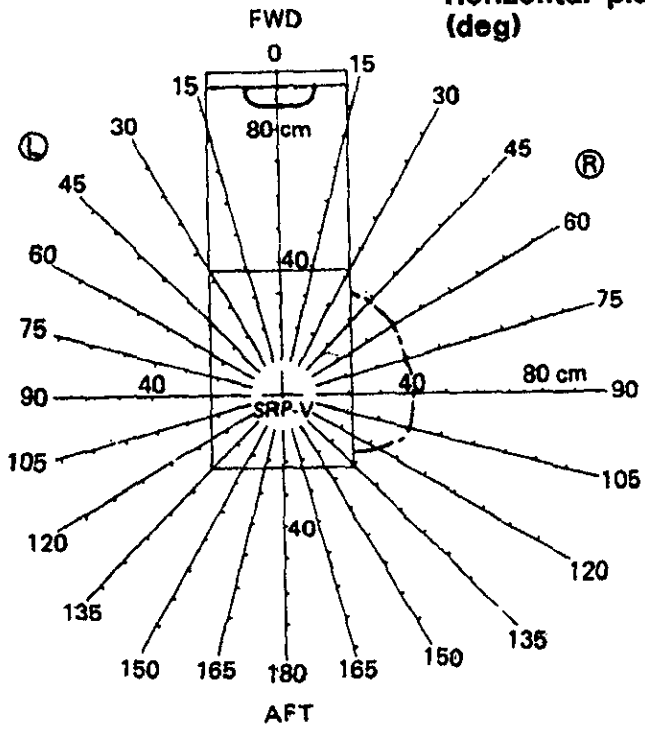

Men — 0 cm (SRP) Horizontal plane (deg)

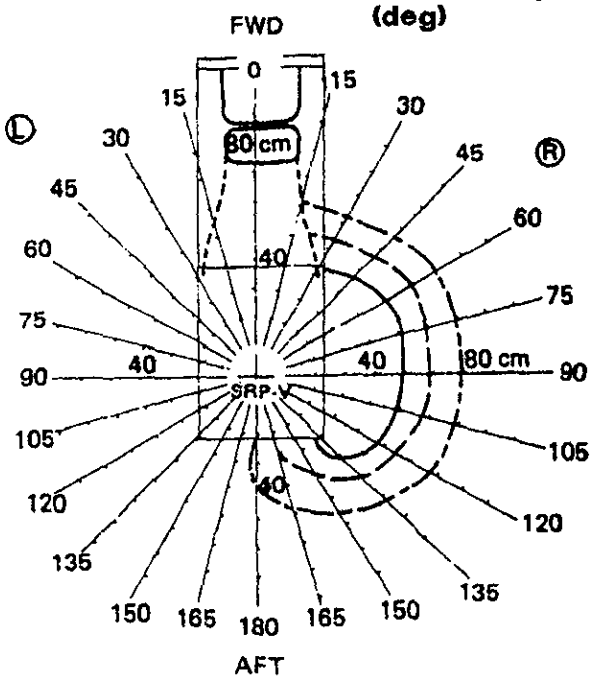

Women — 0 cm (SRP) Horizontal plane (deg)

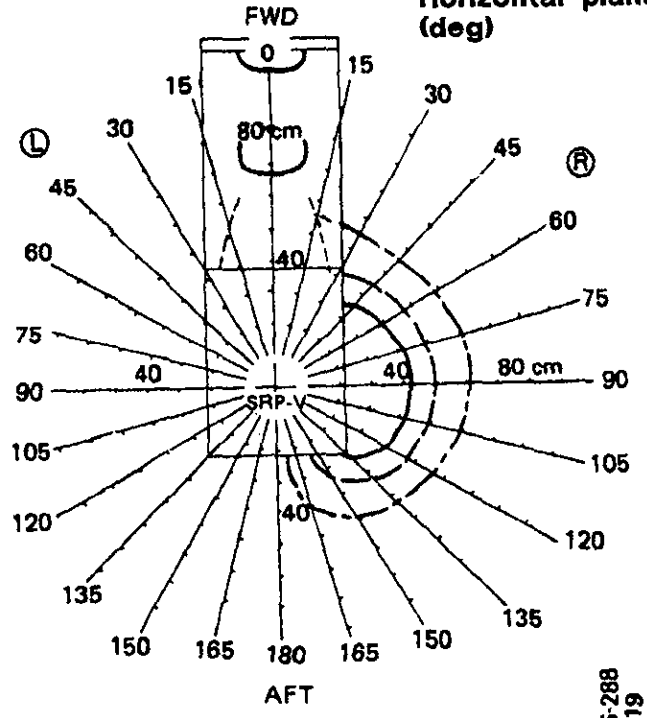

MSIS-288
2 of 19

Horizontal Plane

Men

+15 cm Horizontal plane (deg)

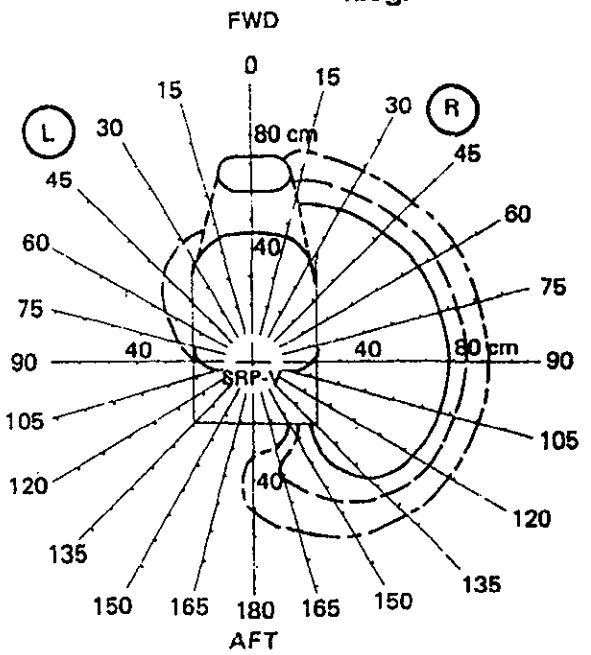

Women

+15 cm Horizontal plane (deg)

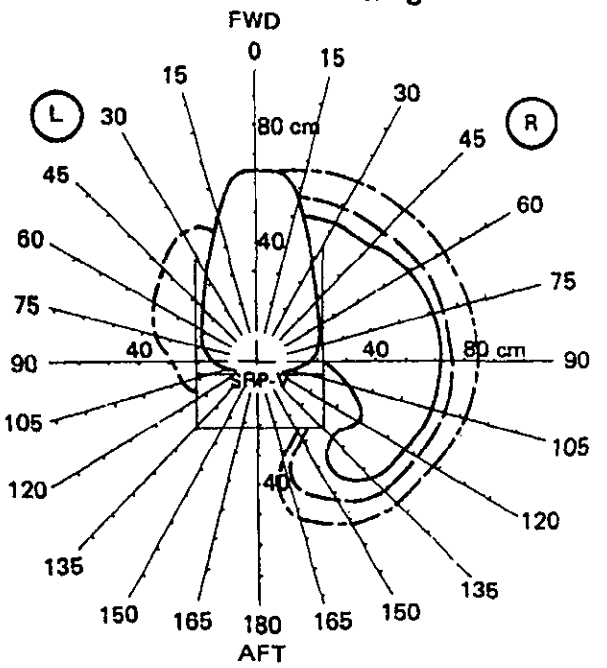

Men

+30 cm Horizontal plane (deg)

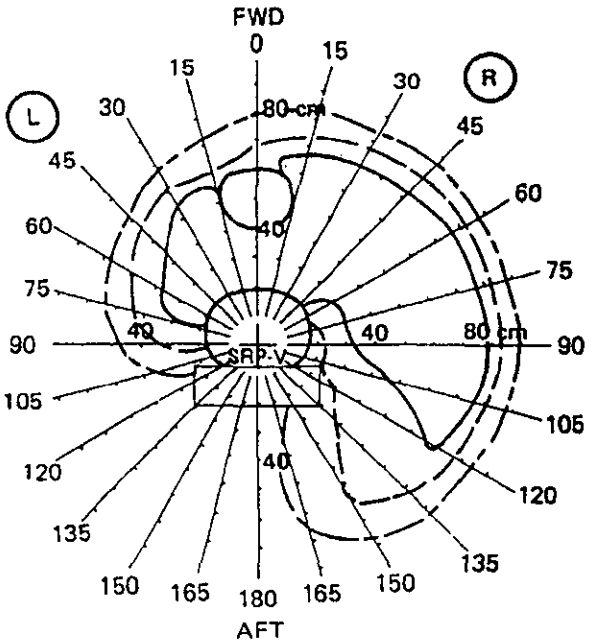

Women

+30 cm Horizontal plane (deg)

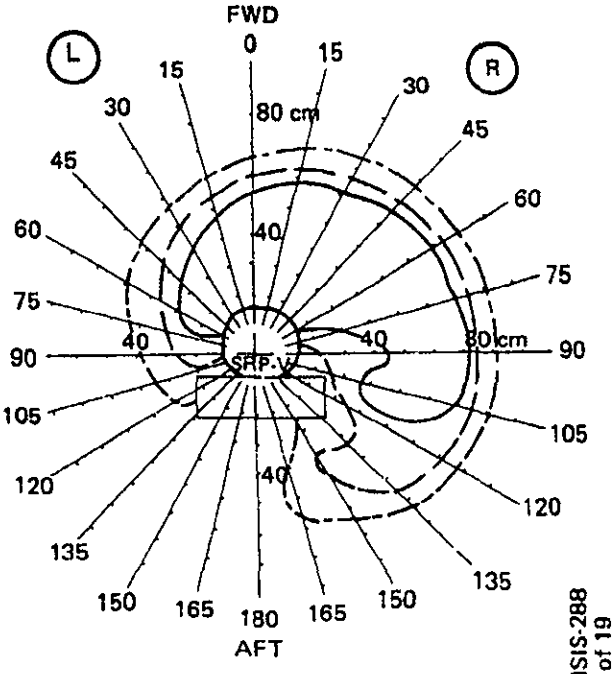

MSIS-288
3 of 19

Horizontal plane

Men — **+46 cm Horizontal plane (deg)**

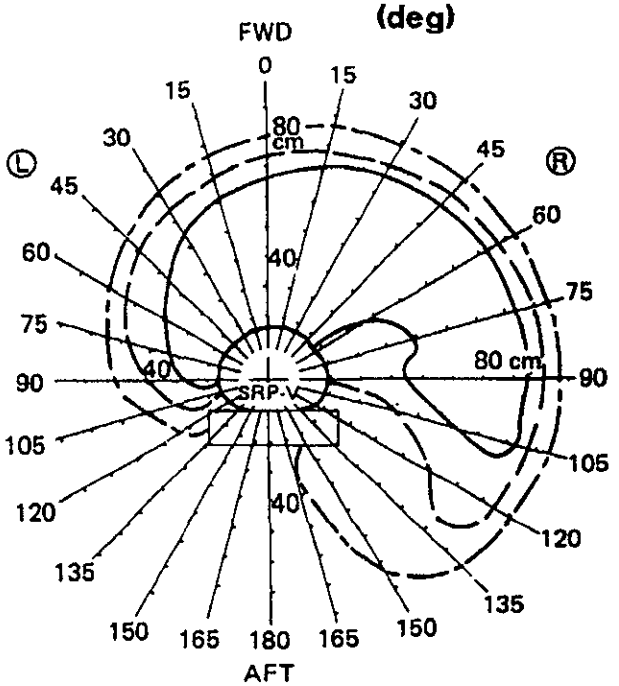

Women — **+46 cm Horizontal plane (deg)**

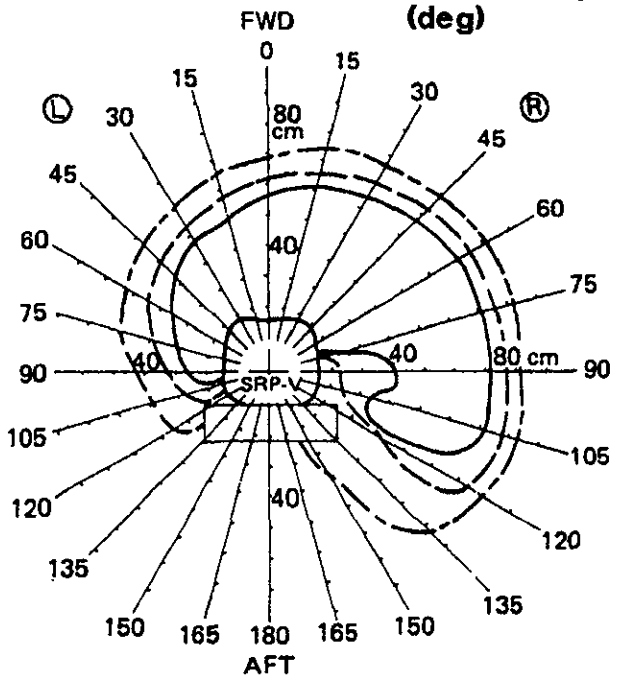

Men — **+61 cm Horizontal plane (deg)**

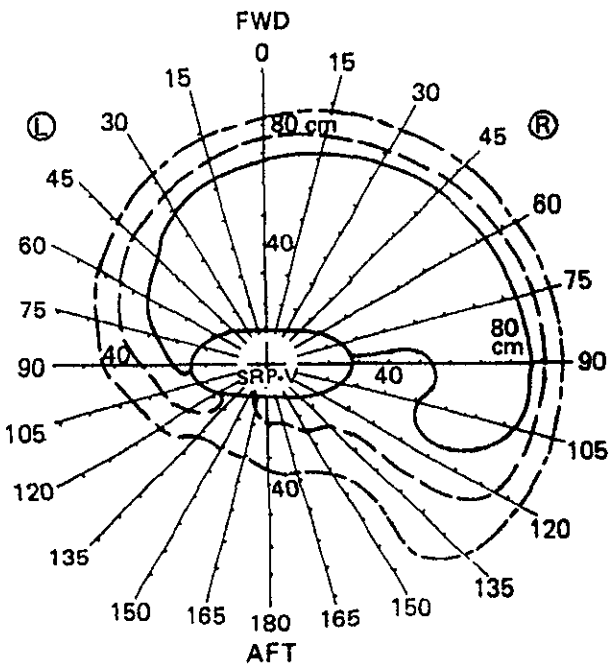

Women — **+61 cm Horizontal plane (deg)**

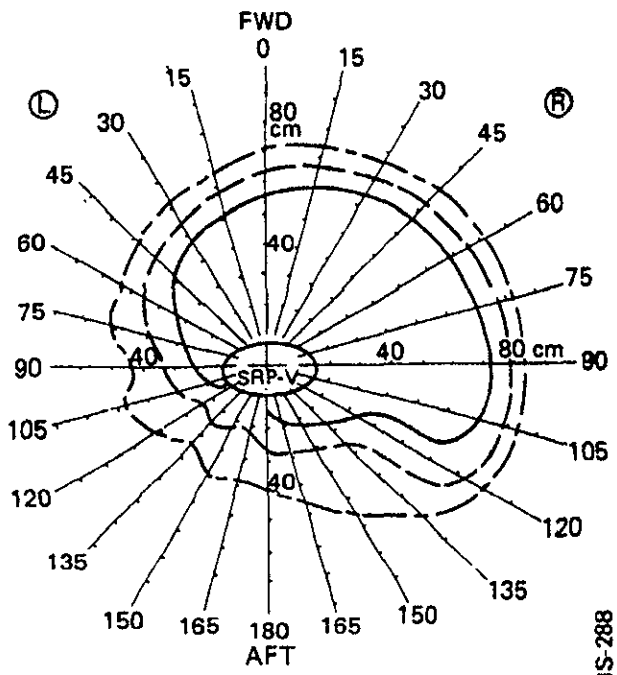

MSIS-288
4 of 19

Horizontal Plane

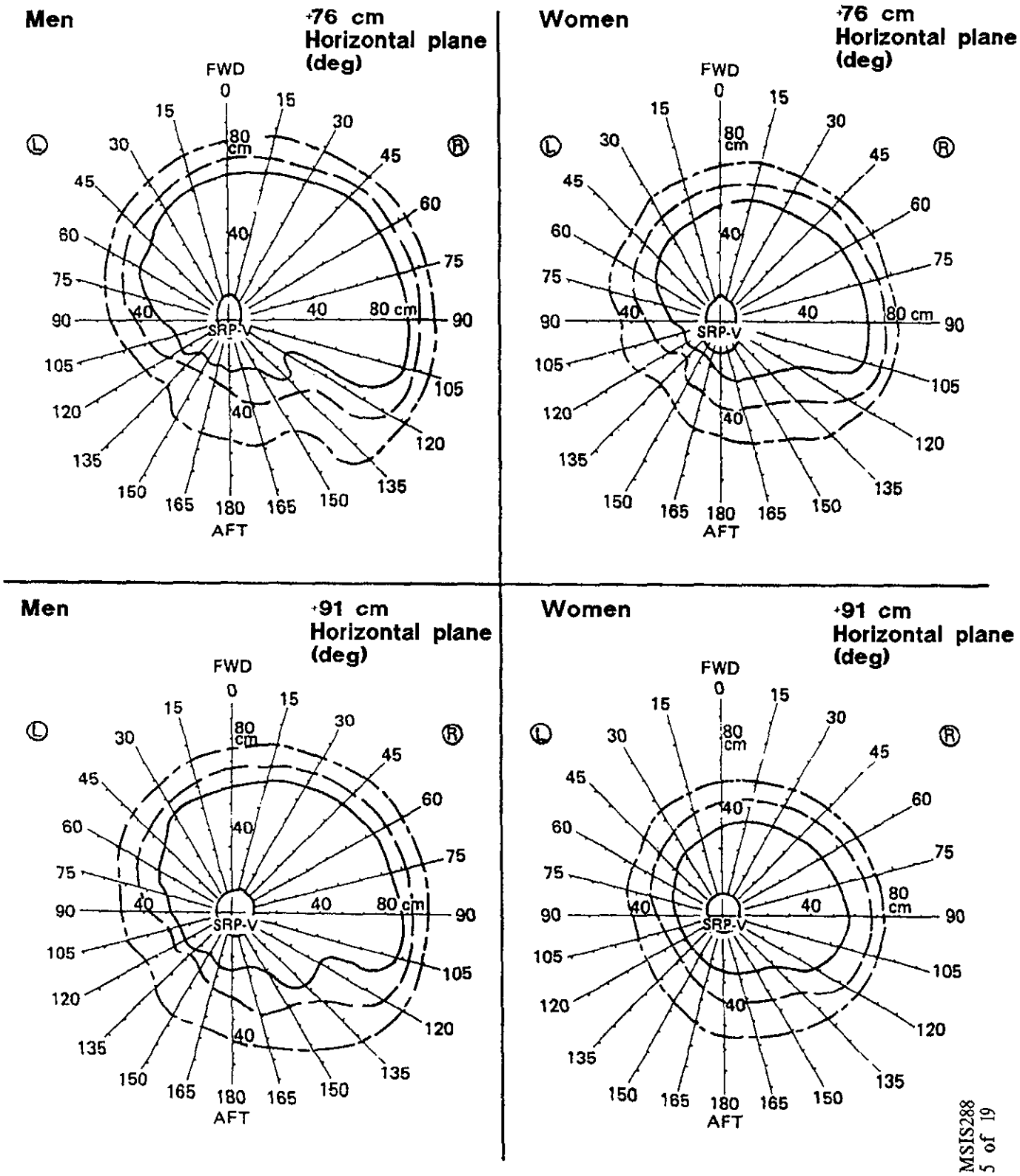

Horizontal Plane

Men

+107 cm
Horizontal plane
(deg)

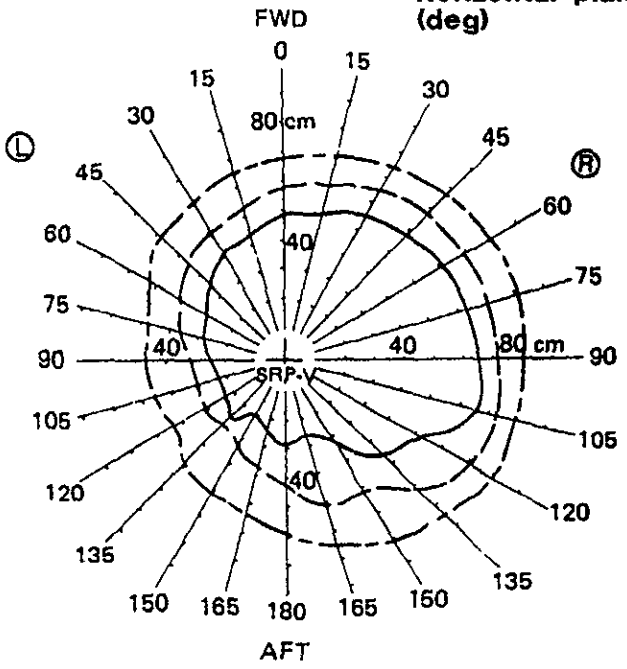

Women

+107 cm
Horizontal plane
(deg)

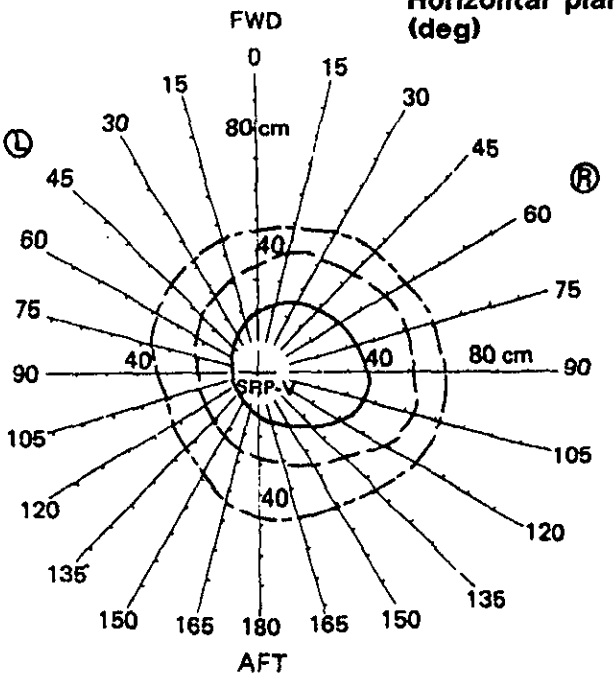

Men

+122 cm
Horizontal plane
(deg)

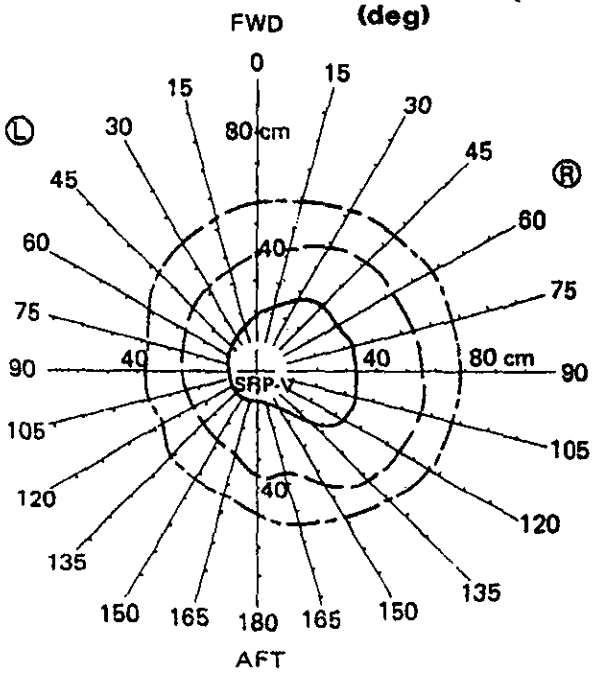

Women

+122 cm
Horizontal plane
(deg)

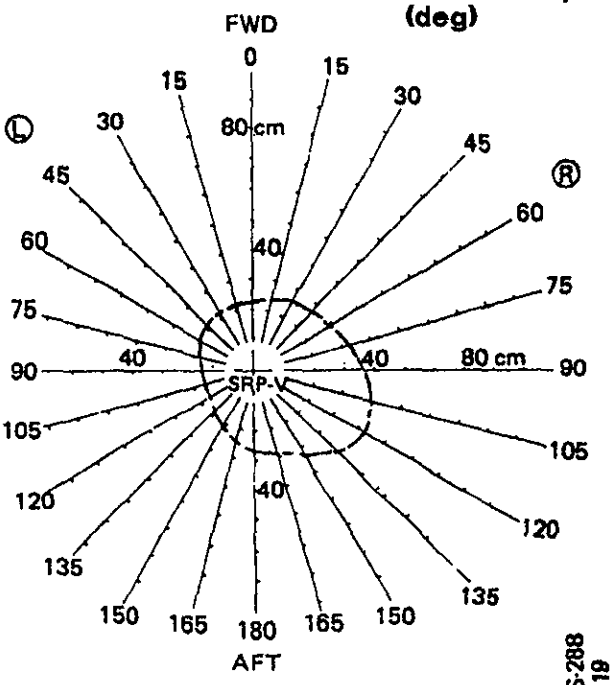

MSIS-288
8 of 19

Horizontal Plane

Men

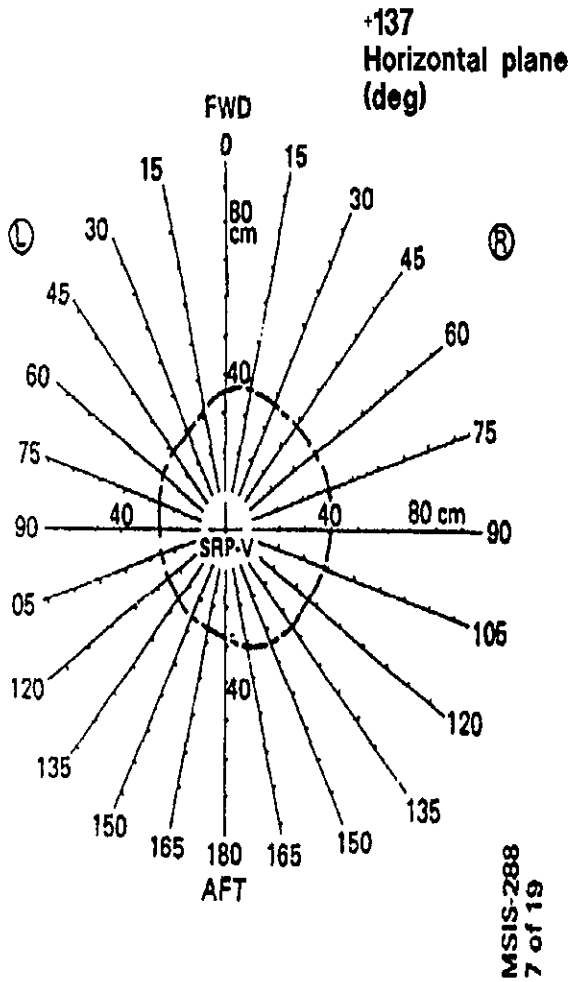

XZ Plane

Thumb and forefinger grasp boundaries for varying dimensions of A (A positive left of SRP)

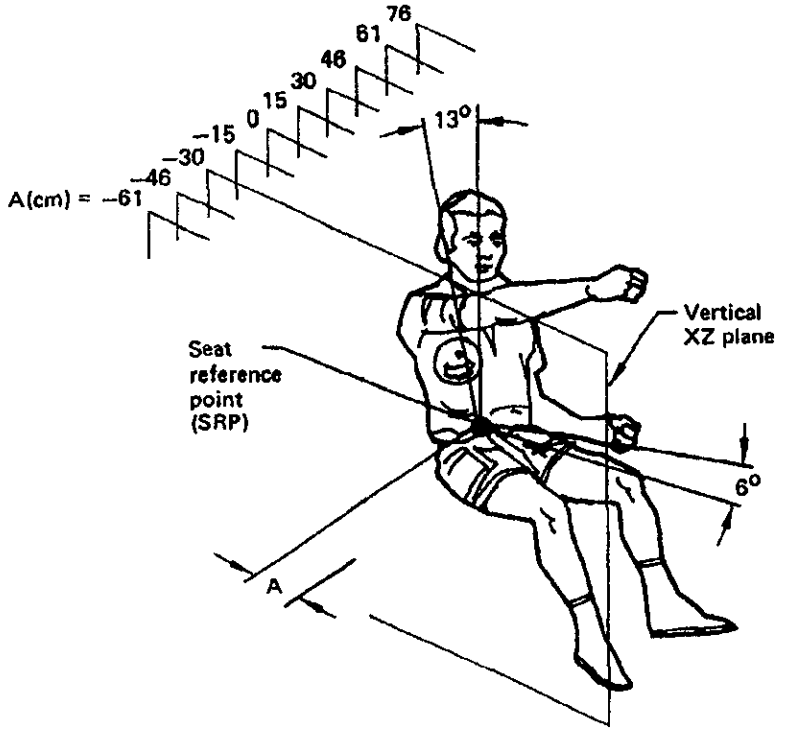

5th percentile outer boundary and inner boundary (innner curve)

50th percentile outer boundary

95th percentile outer boundary

Reference: 310, Pages 35 to 52

Notes:

a. Gravity conditions - the boundaries apply to 1-G conditions only. Microgravity will cause the spine to lengthen, and adjustments should be made based on a new shoulder pivot location.

b. Subjects - the subjects used for this study are representative of the 1967 Air Force population estimates defined in Reference 16, Chapter III

MSIS-288
14 of 19

Figure 3.3.3.3.1-1. Grasp Reach Limits With Right Hand for American Male and Female Populations (Continued)

XZ Plane

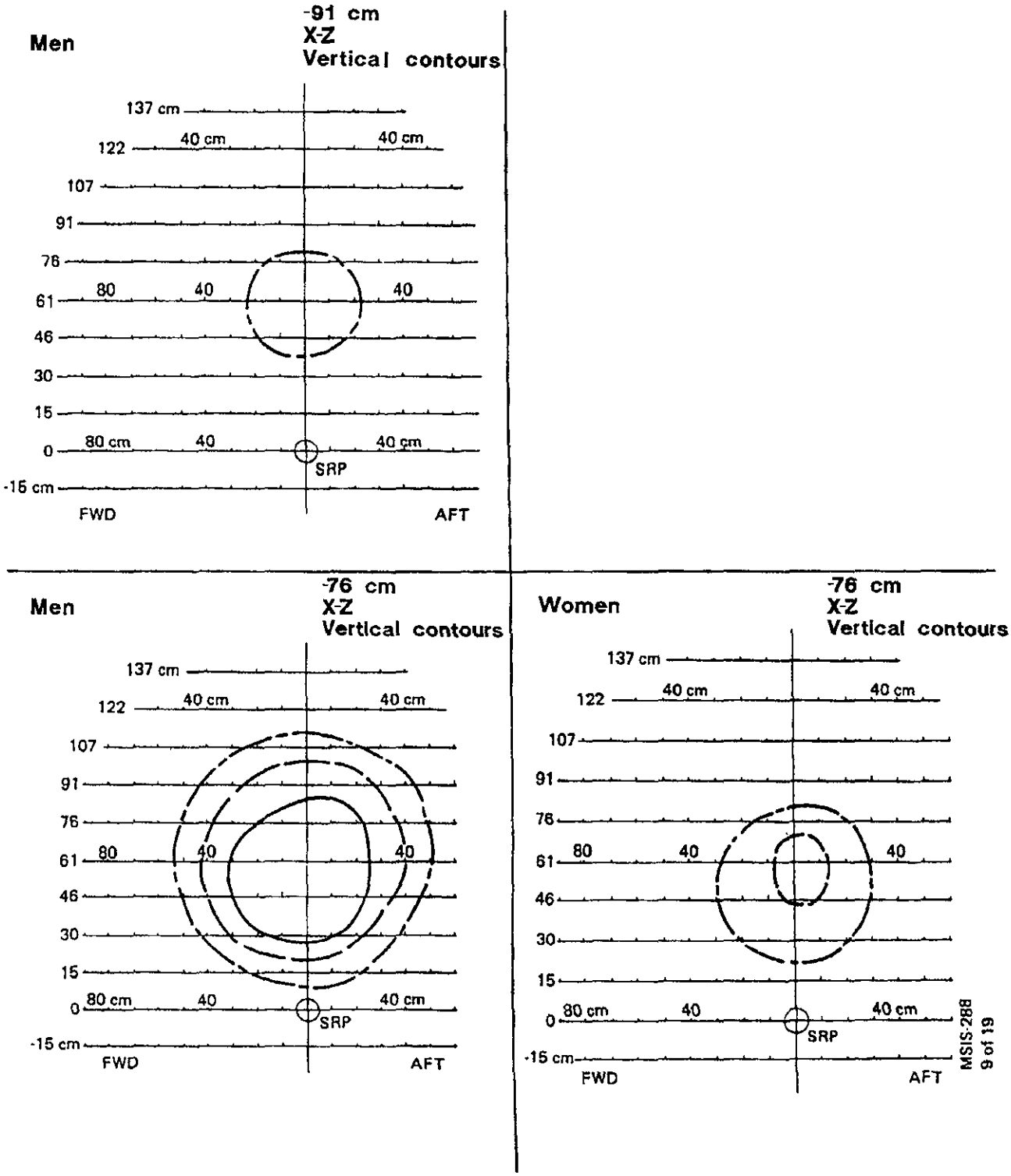
Men
-91 cm
X-Z
Vertical contours
137 cm
122
107
91
76
61
46
30
15
0
-15 cm
40 cm
40 cm
80
40
40
80 cm
40
40 cm
SRP
FWD
AFT
Men
-76 cm
X-Z
Vertical contours
137 cm
122
107
91
76
61
46
30
15
0
-15 cm
40 cm
40 cm
80
40
40
80 cm
40
40 cm
SRP
FWD
AFT
Women
-76 cm
X-Z
Vertical contours
137 cm
122
107
91
76
61
46
30
15
0
-15 cm
40 cm
40 cm
80
40
40
80 cm
40
40 cm
SRP
FWD
AFT
MSIS-288
9 of 19

XZ Plane

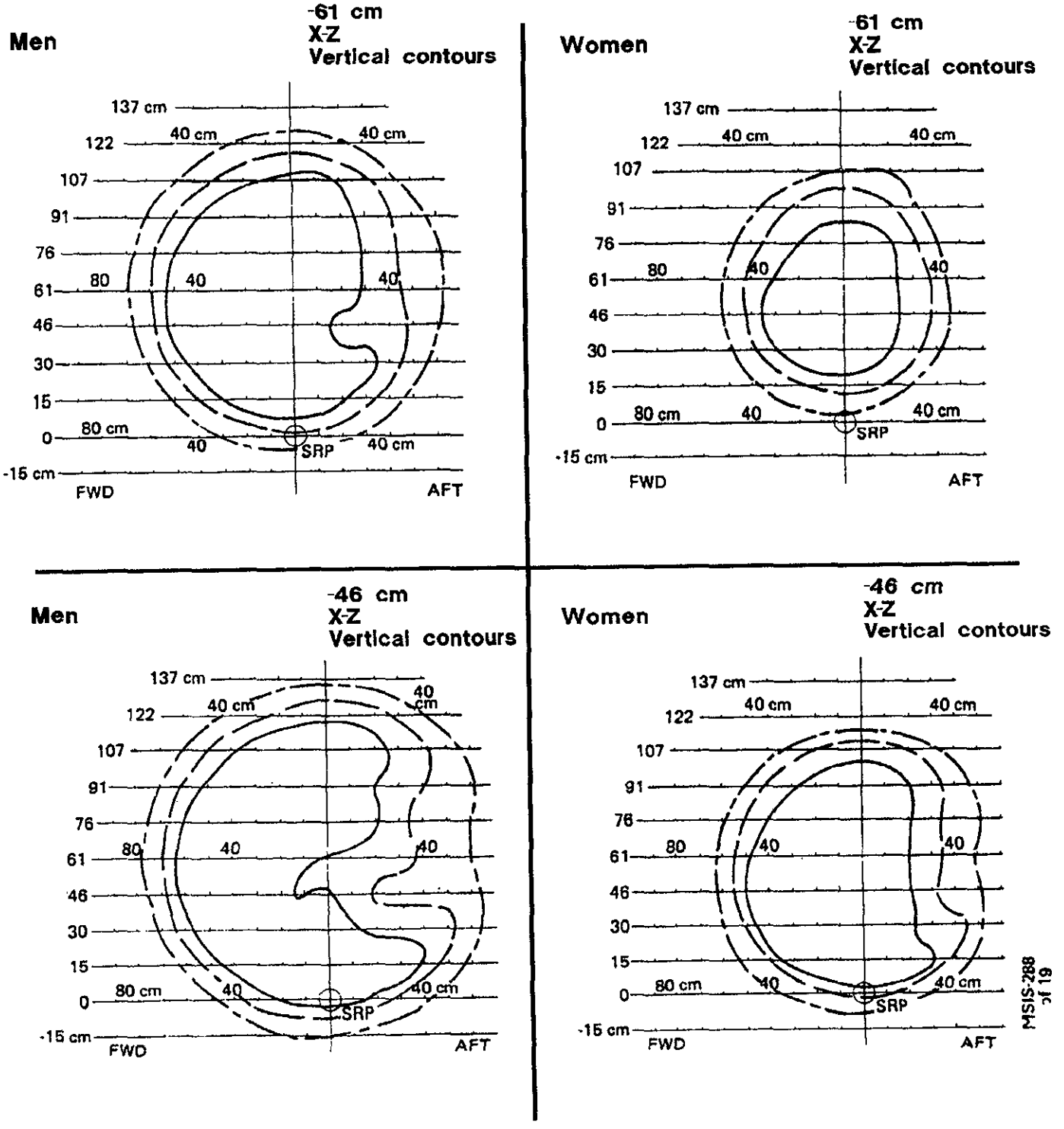
Men
-61 cm
X-Z
Vertical contours
137 cm
122
107
91
76
61
46
30
15
0
-15 cm
40 cm
40 cm
80
40
40
80 cm
40
SRP
40 cm
FWD
AFT
Women
-61 cm
X-Z
Vertical contours
137 cm
122
107
91
76
61
46
30
15
0
-15 cm
40 cm
40 cm
80
40
40
80 cm
40
SRP
40 cm
FWD
AFT
Men
-46 cm
X-Z
Vertical contours
137 cm
122
107
91
76
61
46
30
15
0
-15 cm
40 cm
40 cm
80
40
40
80 cm
40
SRP
40 cm
FWD
AFT
Women
-46 cm
X-Z
Vertical contours
137 cm
122
107
91
76
61
46
30
15
0
-15 cm
40 cm
40 cm
80
40
40
80 cm
40
SRP
40 cm
FWD
AFT
MSIS-288
3 of 19

XZ Plane

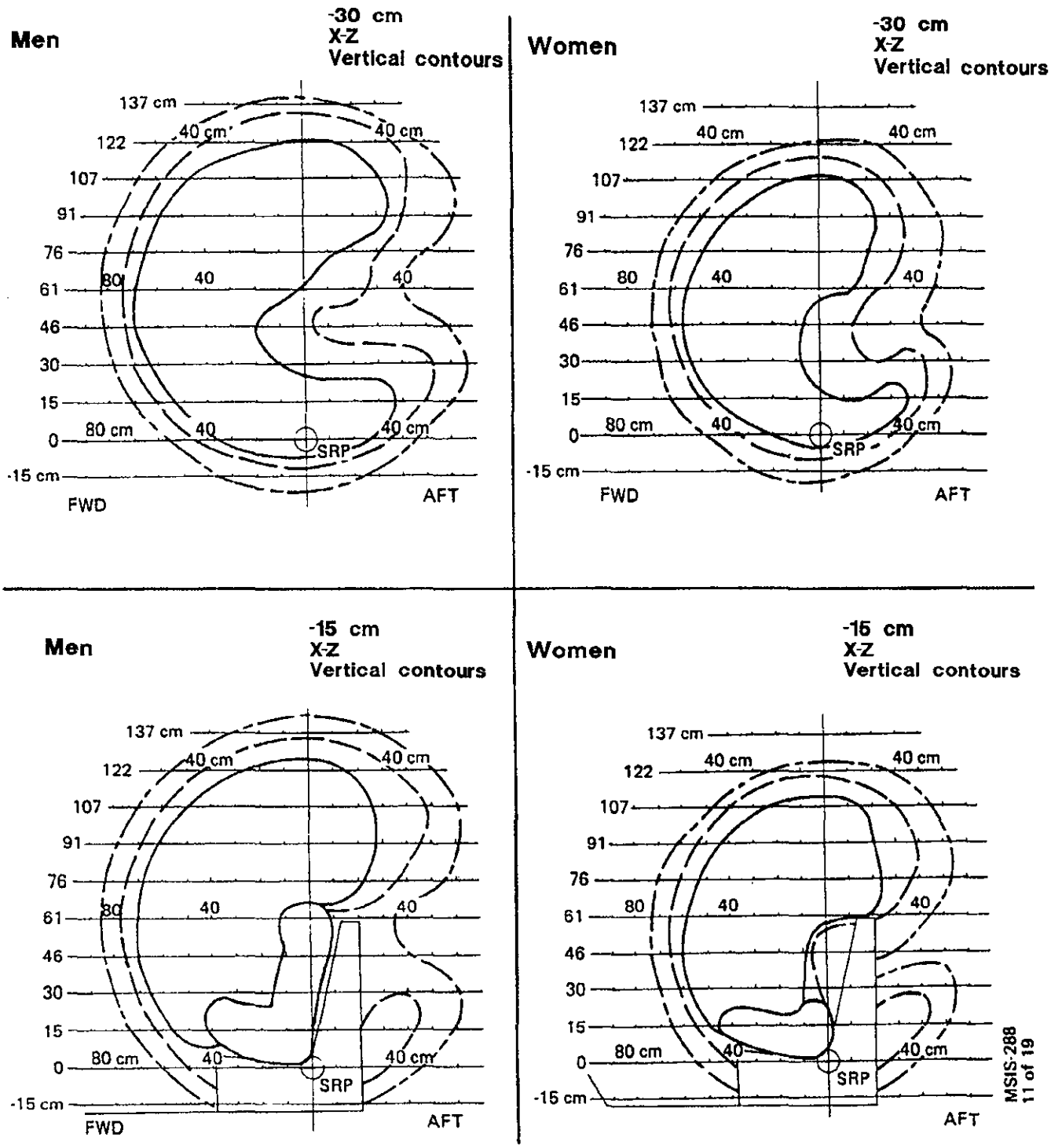
Men
-30 cm
X-Z
Vertical contours
137 cm
122
107
91
76
61
46
30
15
0
-15 cm
40 cm
40 cm
80
40
40
80 cm
40
40 cm
SRP
FWD
AFT
Women
-30 cm
X-Z
Vertical contours
137 cm
122
107
91
76
61
46
30
15
0
-15 cm
40 cm
40 cm
80
40
40
80 cm
40
40 cm
SRP
FWD
AFT
Men
-15 cm
X-Z
Vertical contours
137 cm
122
107
91
76
61
46
30
15
0
-15 cm
40 cm
40 cm
80
40
40
80 cm
40
40 cm
SRP
FWD
AFT
Women
-15 cm
X-Z
Vertical contours
137 cm
122
107
91
76
61
46
30
15
0
-15 cm
40 cm
40 cm
80
40
40
80 cm
40
40 cm
SRP
AFT
MSIS-288
11 of 19

XZ Plane

Men

0 cm
X-Z
Vertical contours

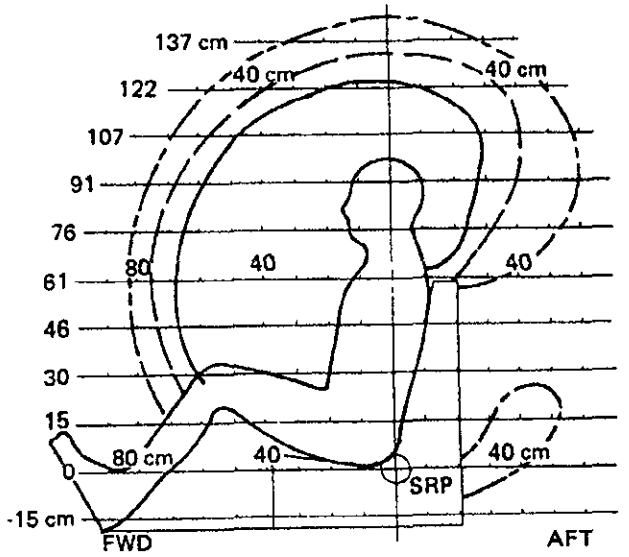

Women

0 cm
X-Z
Vertical contours

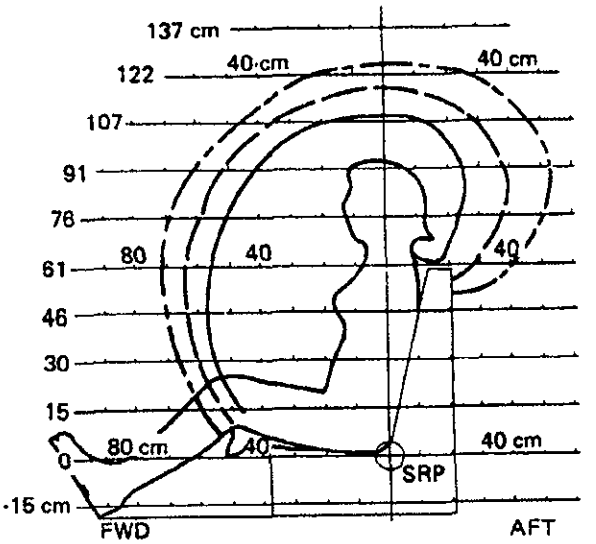

Men

+15 cm
X-Z
Vertical contours

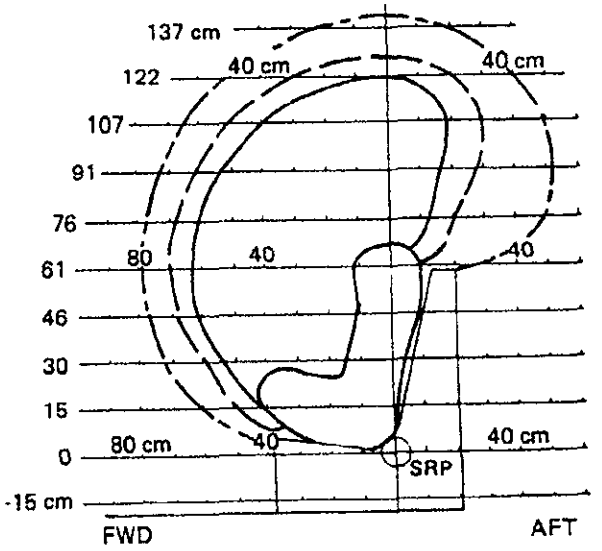

Women

+15 cm
X-Z
Vertical contours

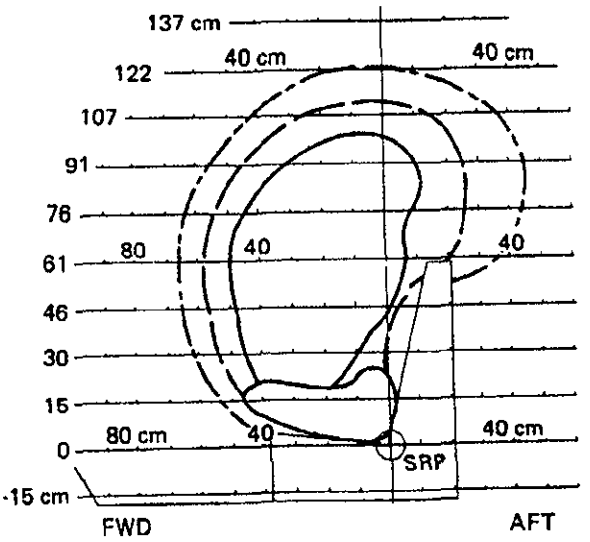

SIS-288 of 19

XZ Plane

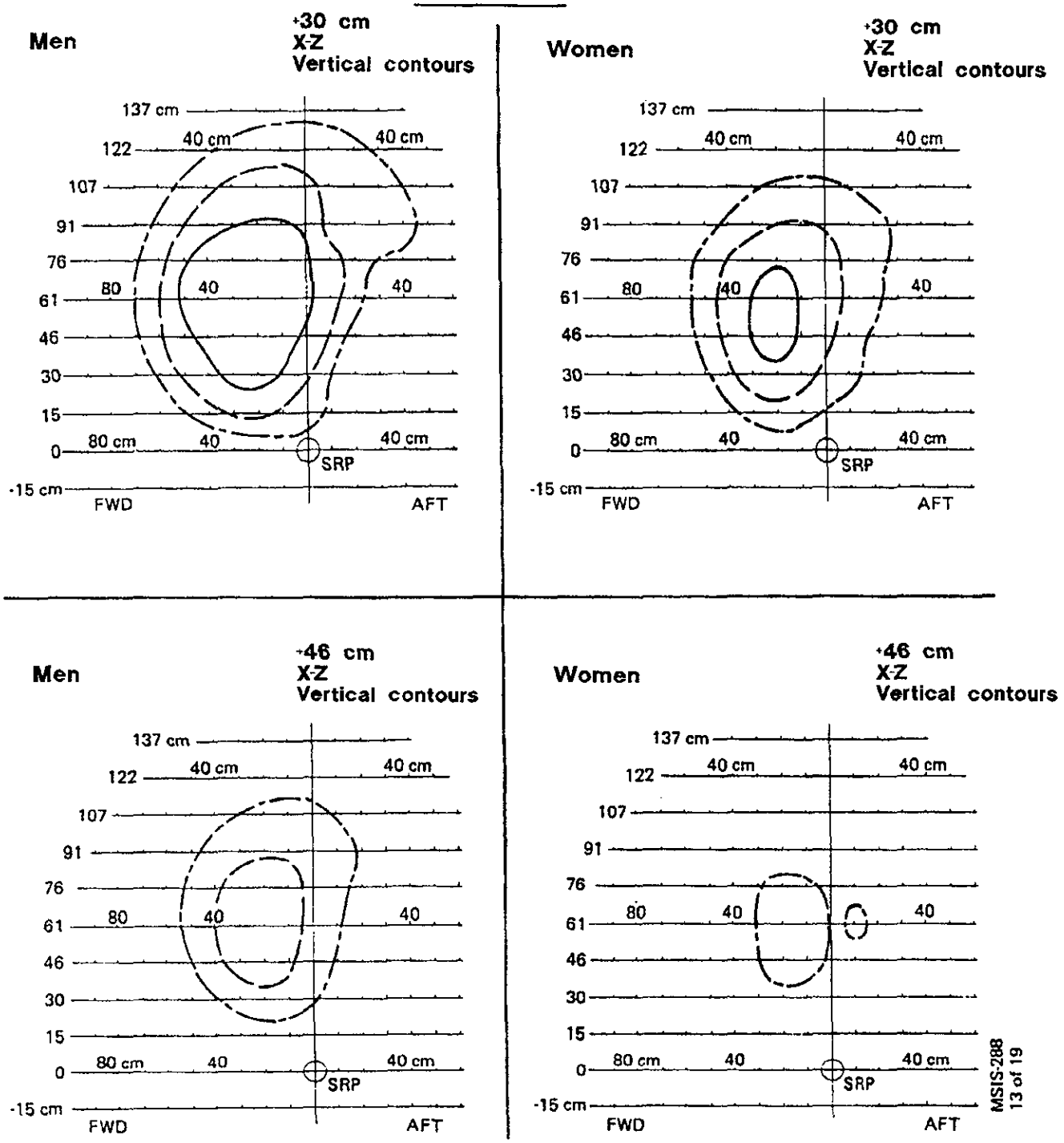
Men
+30 cm
X-Z
Vertical contours
137 cm
122
107
91
76
61
46
30
15
0
-15 cm
40 cm
40 cm
80
40
40
80 cm
40
40 cm
SRP
FWD
AFT
Women
+30 cm
X-Z
Vertical contours
137 cm
122
107
91
76
61
46
30
15
0
-15 cm
40 cm
40 cm
80
40
40
80 cm
40
40 cm
SRP
FWD
AFT
Men
+46 cm
X-Z
Vertical contours
137 cm
122
107
91
76
61
46
30
15
0
-15 cm
40 cm
40 cm
80
40
40
80 cm
40
40 cm
SRP
FWD
AFT
Women
+46 cm
X-Z
Vertical contours
137 cm
122
107
91
76
61
46
30
15
0
-15 cm
40 cm
40 cm
80
40
40
80 cm
40
40 cm
SRP
FWD
AFT
MSIS-288
13 of 19

YZ Plane

Thumb and forefinger grasp boundaries for varying dimensions of A (A positive fwd of SRP)

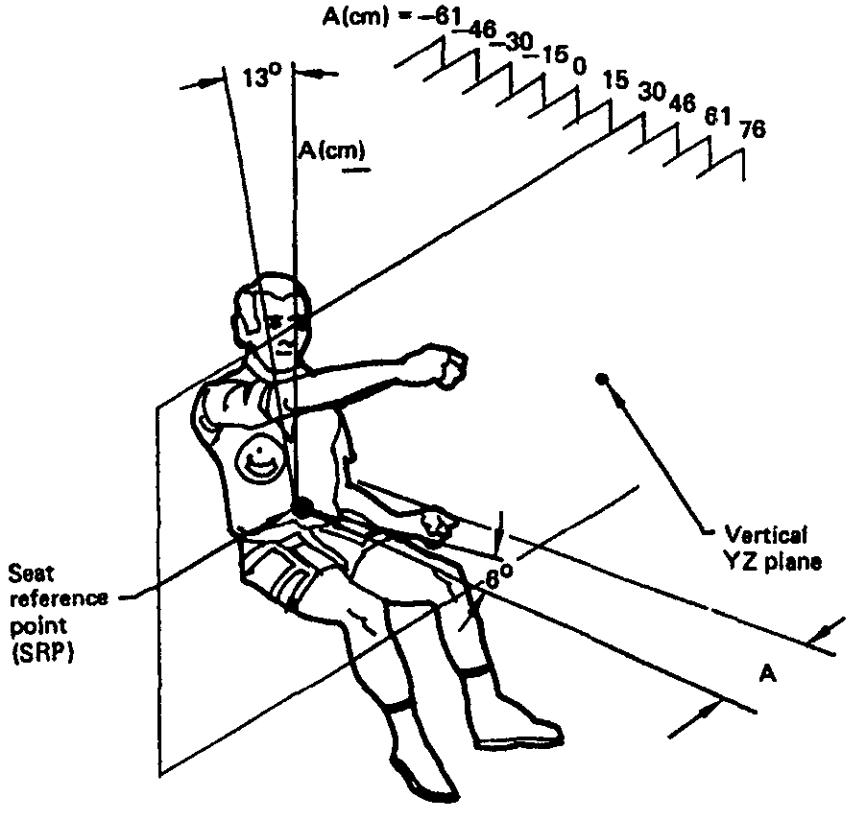

5th percentile outer boundary and inner boundary (innner curve)

50th percentile outer boundary

95th percentile outer boundary

Reference: 310, Pages 35 to 52

Notes:

a. Gravity conditions - the boundaries apply to 1-G conditions only. Microgravity will cause the spine to lengthen, and adjustments should be made based on a new shoulder pivot location.

b. Subjects - the subjects used for this study are representative of the 1967 Air Force population estimates defined in Reference 16, Chapter III

Figure 3.3.3.3.1-1. Grasp Reach Limits With Right Hand for American Male and Female Populations (Continued)

MSIS-288
8 of 19

YZ Plane

Men

-61 cm
Y-Z
Vertical contours

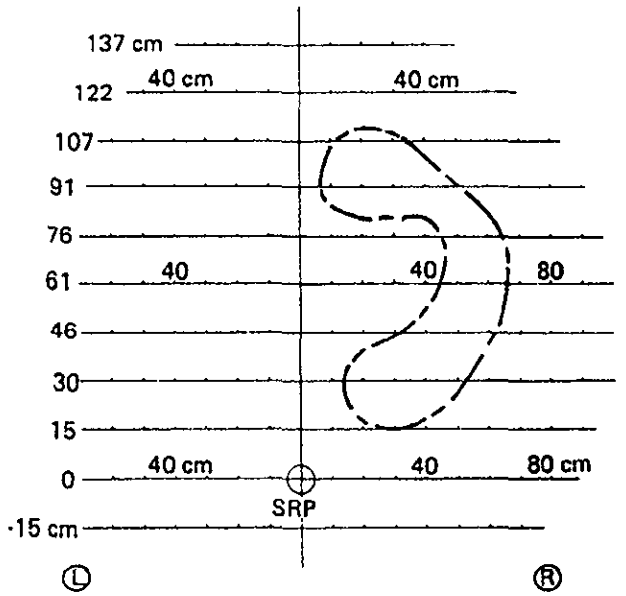

Men

-46 cm
Y-Z
Vertical contours

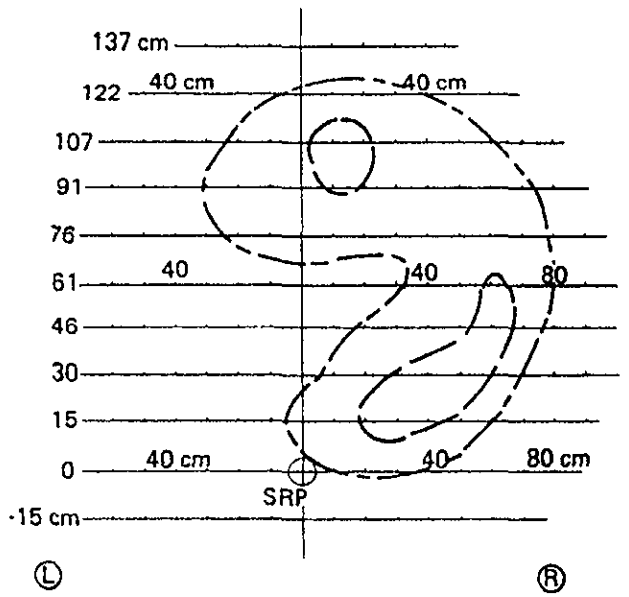

Women

-46 cm
Y-Z
Vertical contours

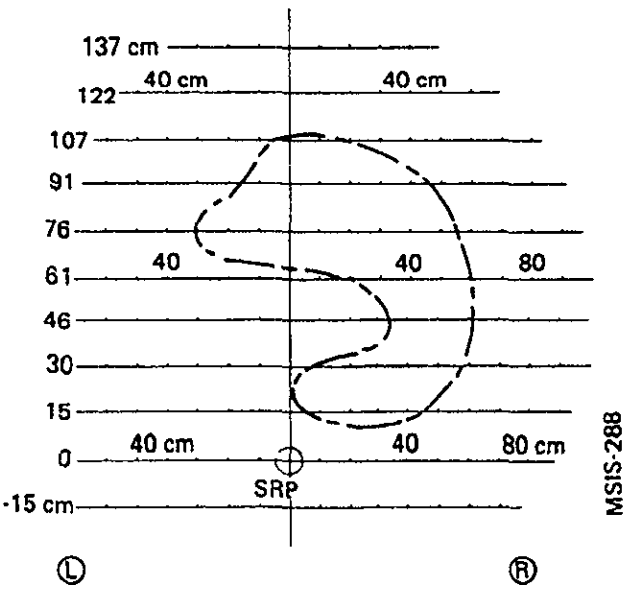

MSIS-288
15 of 19

Y Z Plane

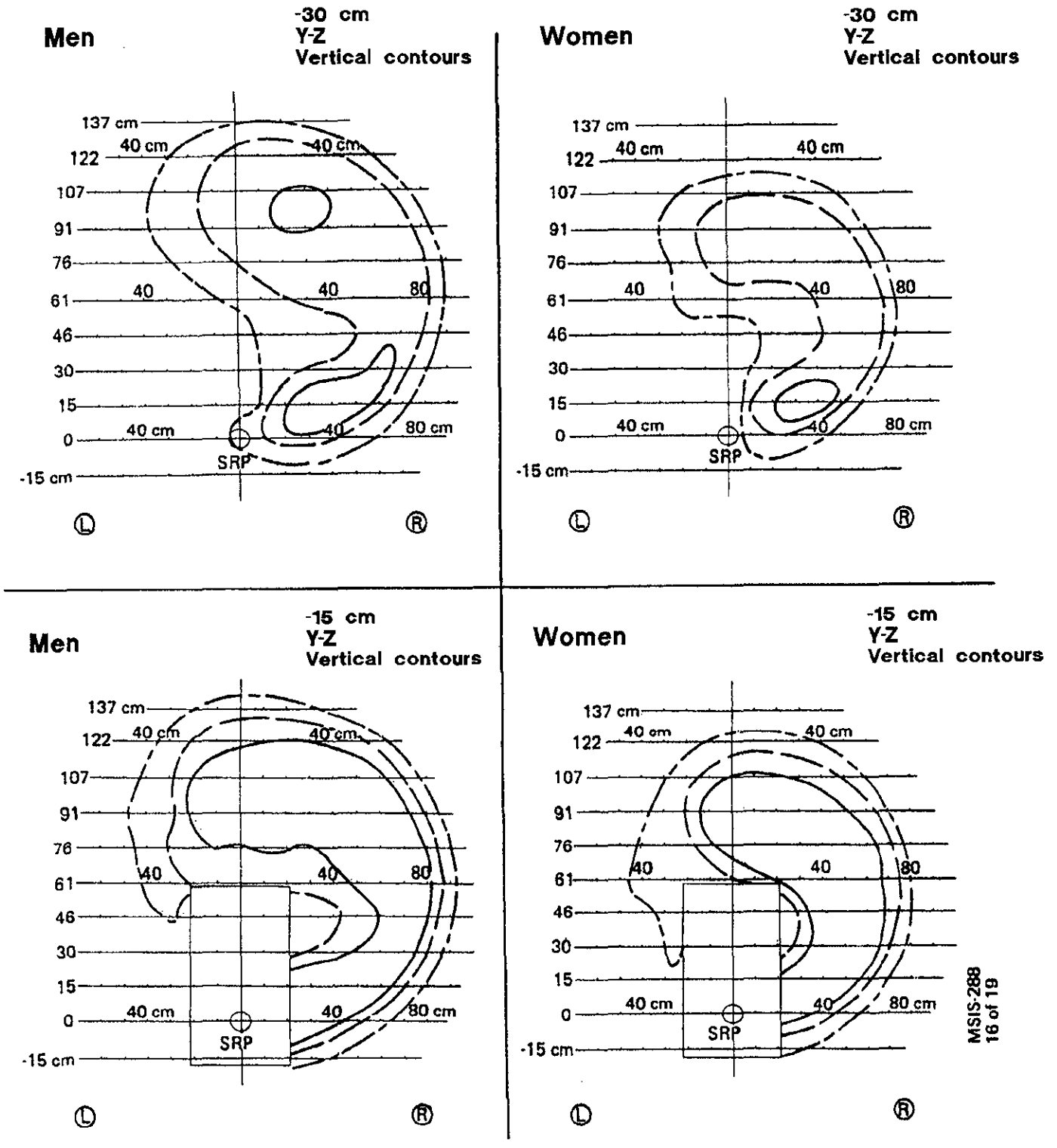

MSIS-288
16 of 19

Y Z Plane

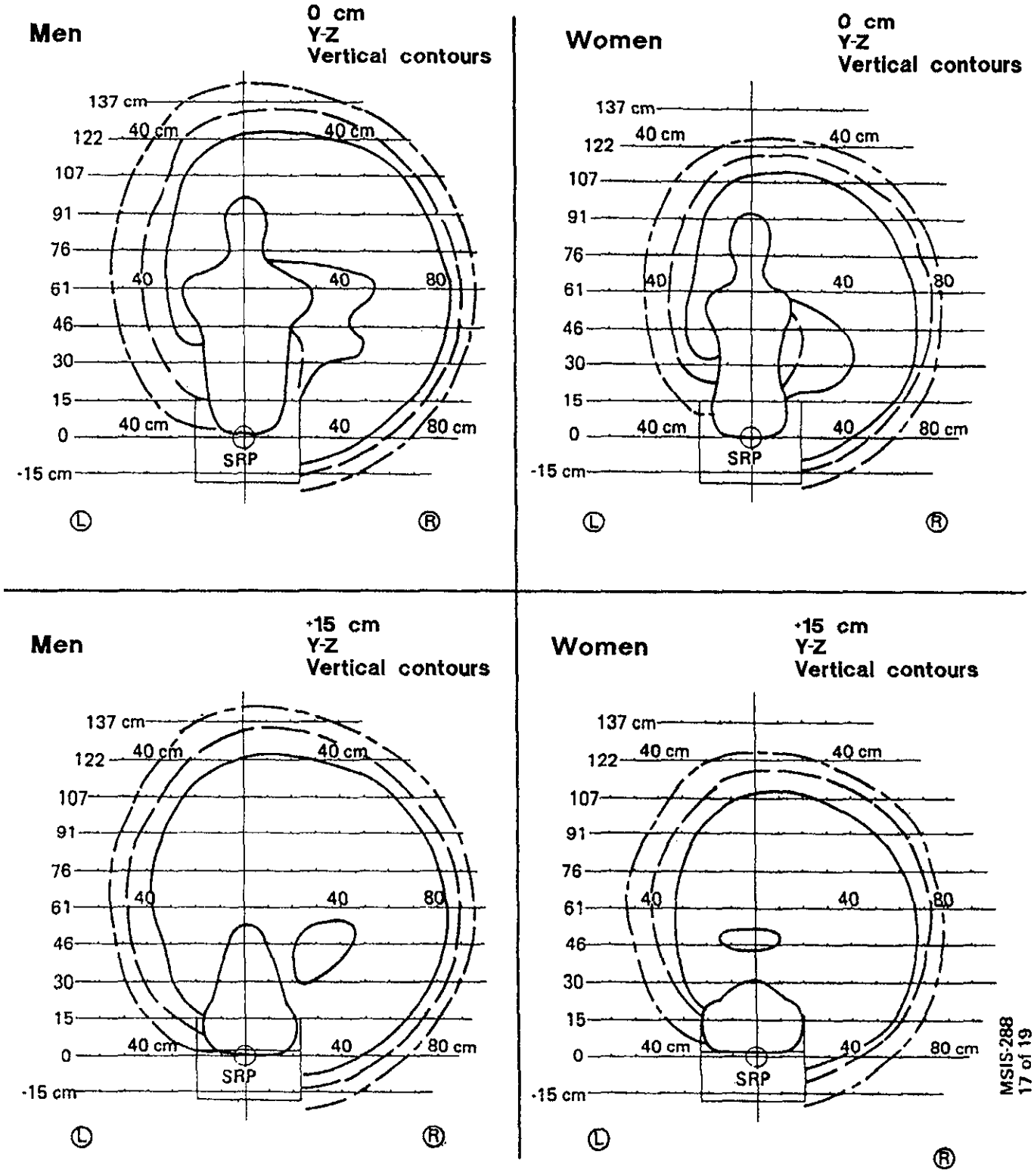
Men
0 cm
Y-Z
Vertical contours
Women
0 cm
Y-Z
Vertical contours
Men
+15 cm
Y-Z
Vertical contours
Women
+15 cm
Y-Z
Vertical contours
137 cm
122
107
91
76
61
46
30
15
0
-15 cm
40 cm
40
80
80 cm
SRP
L
R
MSIS-288
17 of 19

YZ Plane

Men

+30 cm
Y-Z
Vertical contours

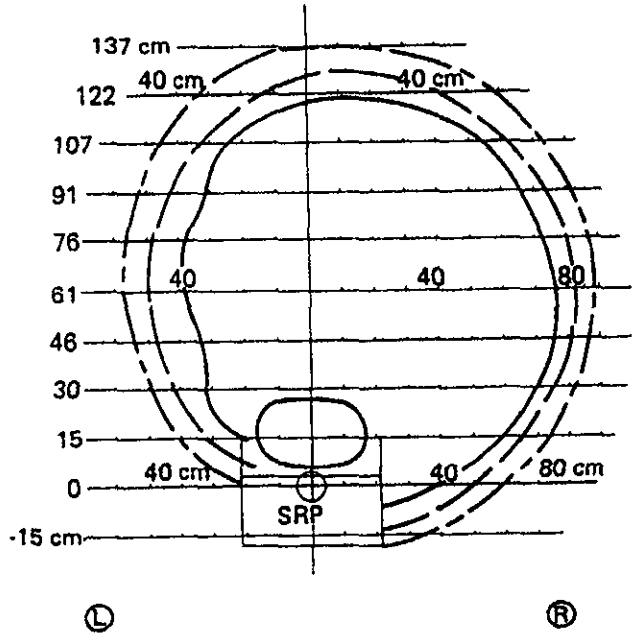

Women

+30 cm
Y-Z
Vertical contours

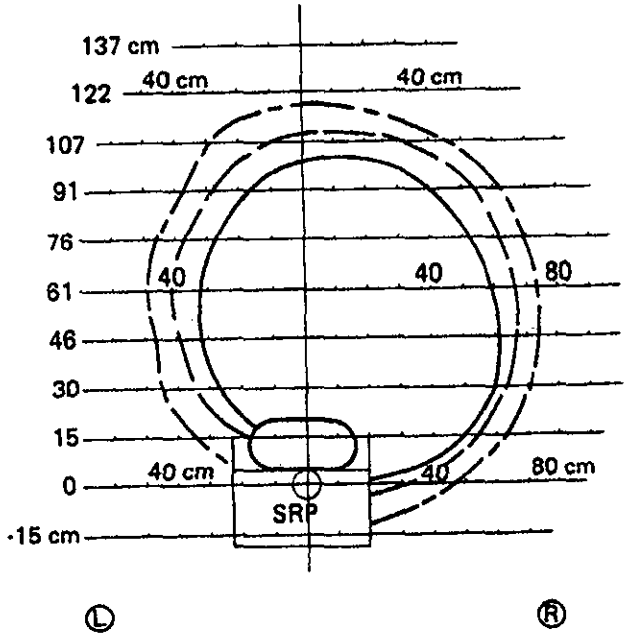

Men

+46 cm
Y-Z
Vertical contours

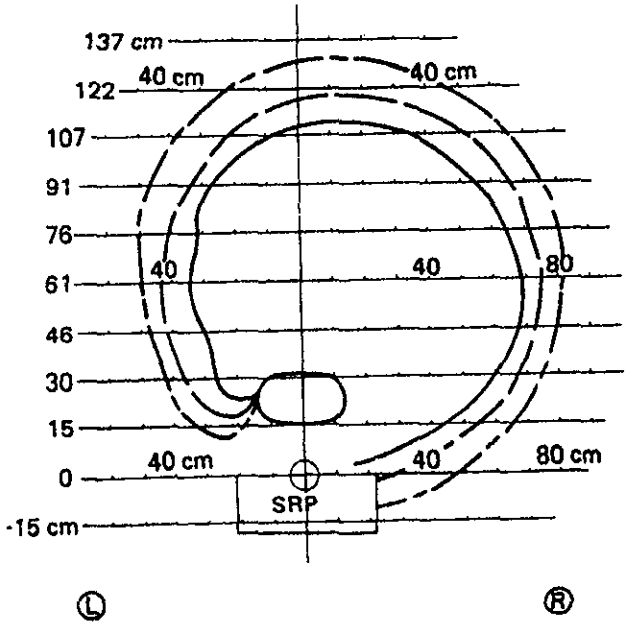

Women

+46 cm
Y-Z
Vertical contours

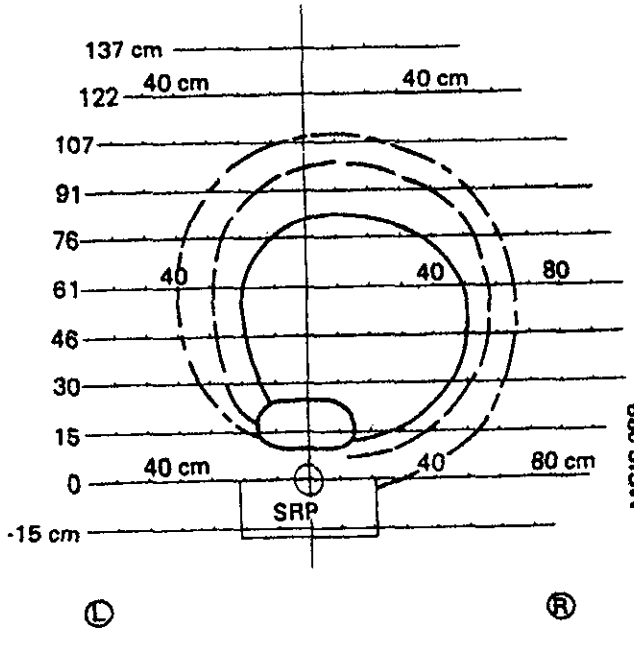

MSIS-288
18 of 19

XZ Plane

Men

+61 cm
Y-Z
Vertical contours

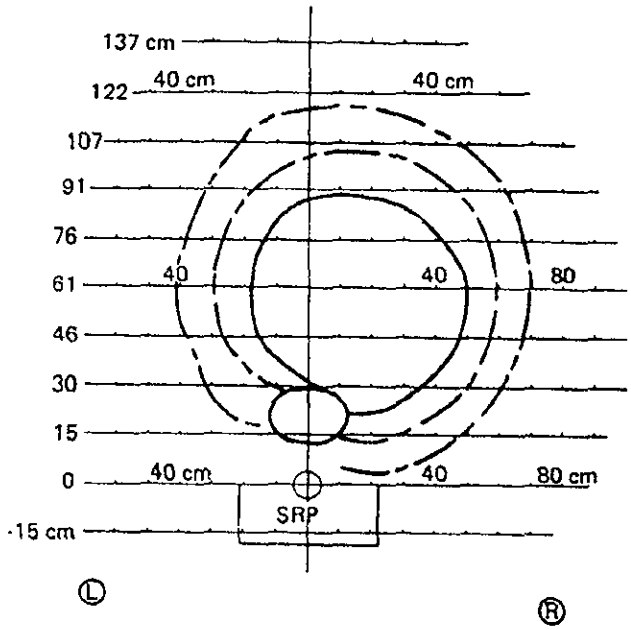

Women

+61 cm
Y-Z
Vertical contours

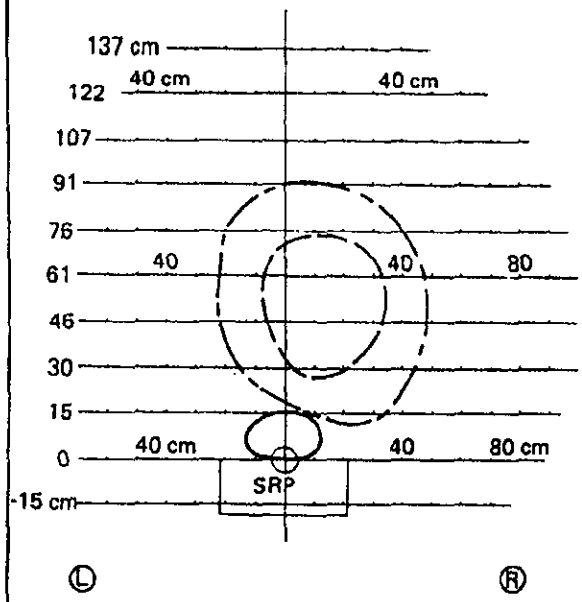

Men

+76 cm
Y-Z
Vertical contours

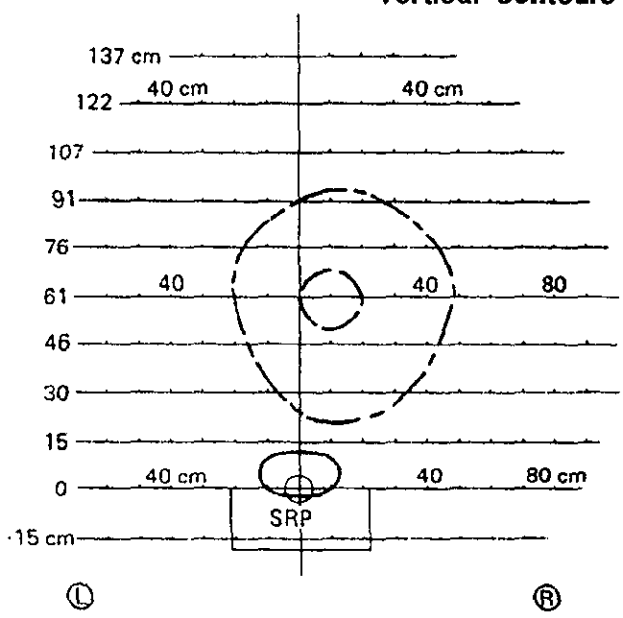

MSIS-288
19 of 19

Direction of arm reach (from 0 deg or "straight ahead," to 90 deg to the right) (deg)	Approximate changes in reach for each single degree of change in backrest angle (reach increases as backrest angle moves to vertical, and vice versa)
0	±1.02 cm (±0.40 in)
15	±1.27 cm (±0.50 in)
30	±1.14 cm (±0.45 in)
45	±0.94 cm (±0.37 in)
60	±0.66 cm (±0.26 in)
75	±0.36 cm (±0.14 in)
90	±0.25 cm (±0.10 in)

Reference: 16, Volume 1, page V-61

MSIS-287

Figure 3.3.3.3.1-2. Changes in Arm Reach Boundaries as a Function of Variation in Backrest Angle of 13 Degrees From Vertical

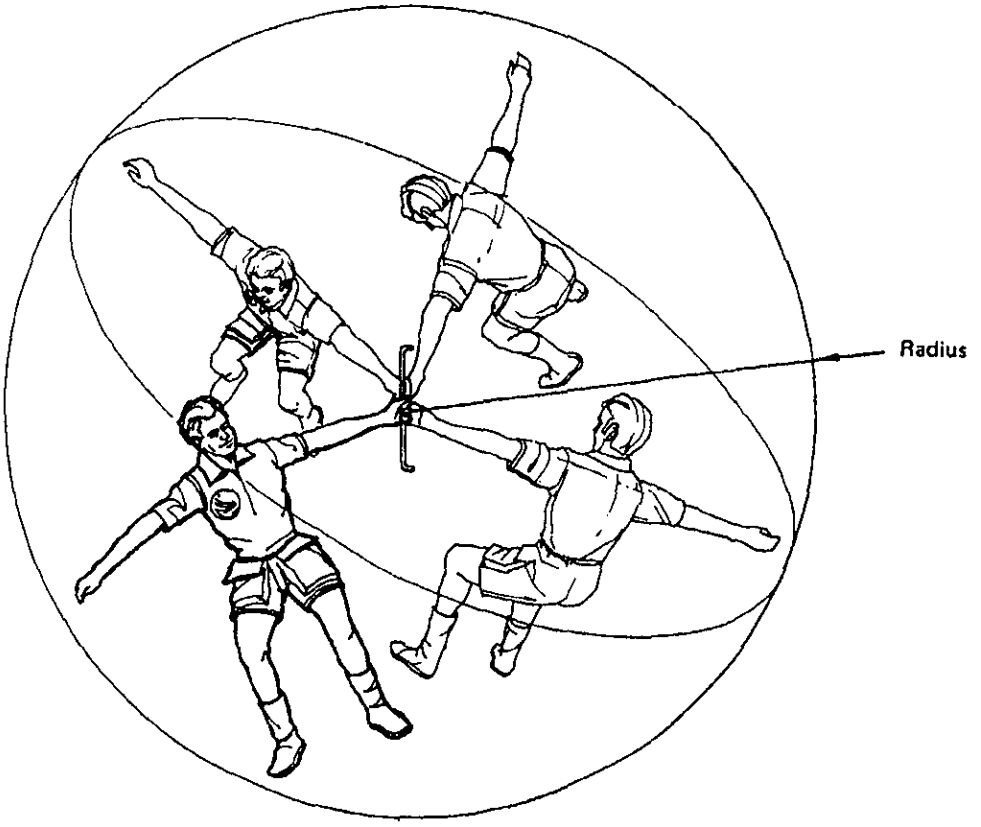

	Radius of fingertip reach boundary
95th percentile male	195 cm (77 inches)
5th percentile female	150 cm (63 inches)

Reference: 351

Notes:

a. Subjects - These data were generated using a computer-based anthropometric model. The computer model was developed using a sample of 192 male astronaut candidates and 22 female astronaut candidates measured in 1979 and 1980 (Reference 365). The 5th percentile stature of the male population is 167.9 cm (66.1 inches) and the 95th percentile male stature is 189.0 cm (74.4 inches. The 5th percentile stature of the female population is 157.6 cm (62.0 in.) and the 95th percentile female is 175.7 cm (69.2 in.)

b. Gravity conditions - Although the motions apply to a microgravity condition, the effects of spinal lengthening have not been considered.

MSIS-286

Figure 3.3.3.3.1-3. Microgravity Handhold Restraint Reach Boundaries

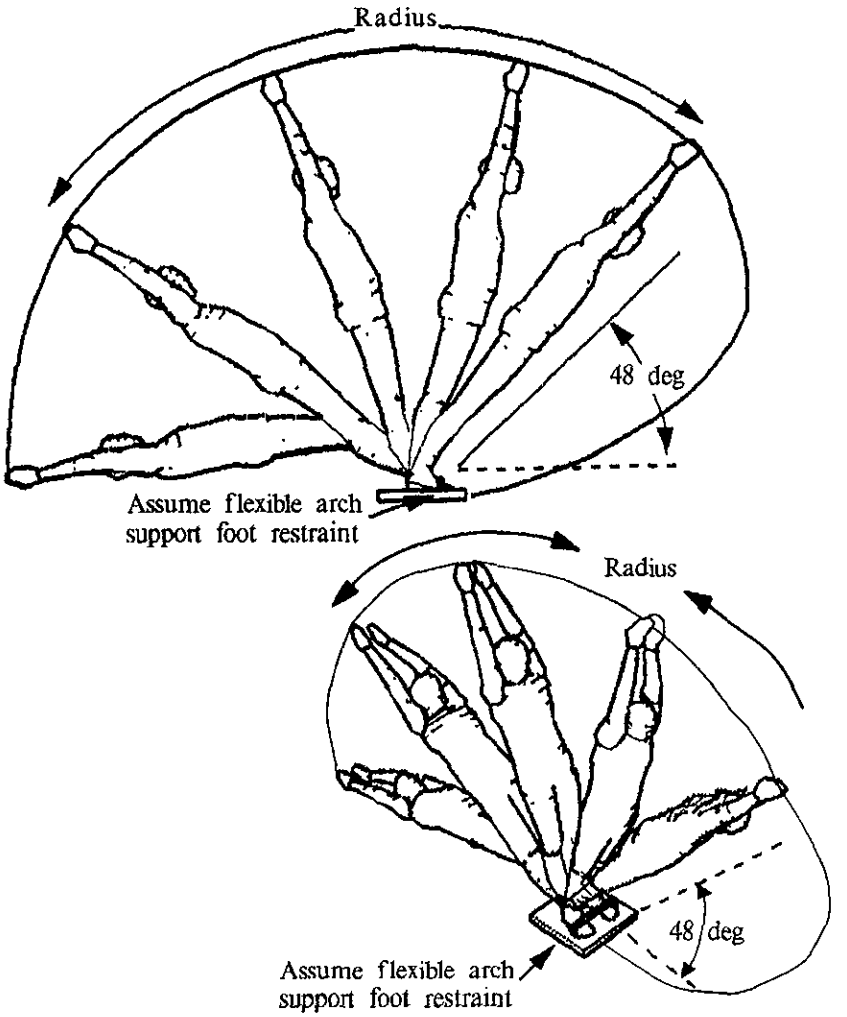

	Radius of reach fingertip boundary in X-Z plane	
	Flexible arch *support foot restraint*	Fixed "flat" foot *restraint*
95th percentile male	222 cm (87 in)	212 cm (83 in)
5th percentile female	188 cm (74 in)	172 cm (68 in)

Reference: 320
Notes:

a. Subjects - These data were generated using a computer-based anthropometric model. The computer model was developed using a sample of 192 male astronaut candidates and 22 female astronaut candidates measured in 1979 and 1980 (*Reference 365*). The 5th percentile stature of the male population is 167.9 cm (66.1 inches) and the 95th percentile male stature is 189.0 cm (74.4 inches). The 5th percentile stature of the female population is 157.6 cm (62.0 in.) and the 95th percentile female is 175.7 cm (69.2 in)

b. Gravity conditions - Although the motions apply to a microgravity condition, the effects of spinal lengthening have not been considered.

c. Restraint configuration - two sets of dimensions are given for the fore/aft reach boundary. One set, the larger dimensions, apply to a fairly snug, but flexible, arch support that allows the toes and heels to raise slightly from the floor. The other set of dimensions apply to a foot restraint that secures the feet flat to the floor.

MSIS337b
Rev. B

Figure 3.3.3.3.1-4 Microgravity Foot Restraint Reach Boundaries - Fore/Aft

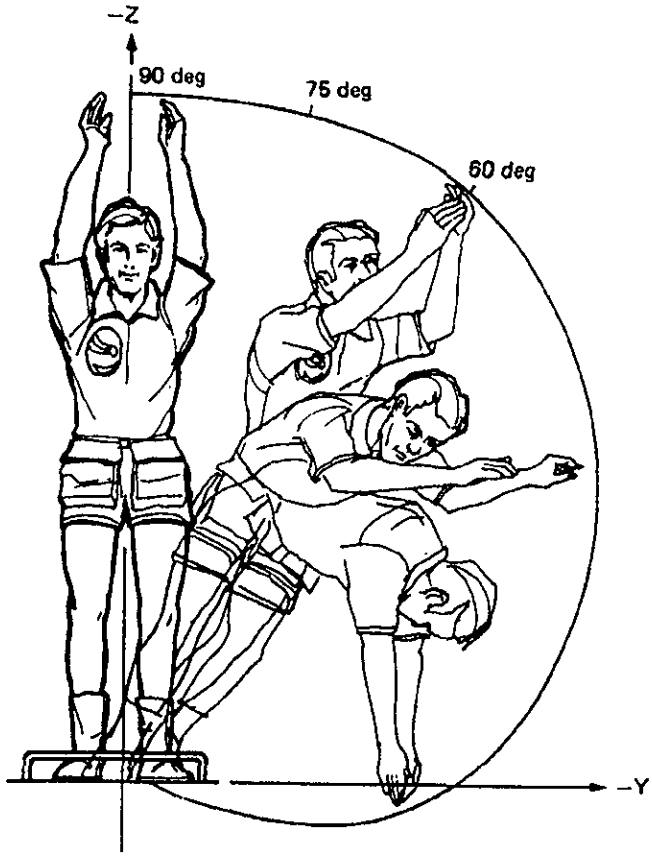

Dimensions of fingertip reach boundary in Y-Z plane			
	Angle (degrees)	Y-axis dimension	Z-axis dimension
95th percentile male	90	0	222 cm
	75	80 cm (31 in)	193 cm (76 in)
	60	110 cm (43in)	160 cm (63 in)
5th percentile male	90	0	188 cm (74 in)
	75	28 cm (11 in)	175 cm (69in)
	60	80 cm (31 in)	140 cm (55 in)

Reference: 320

Notes:

a. The angle is measured between the x-axis and a line drawn from the center of the foot restraint to the reach boundary
b. The full reach boundary (up to 0 degrees angle) will be provided in the next revision of this document.
c. These data were generated using a computer-based anthropomentric model. The computer model was developed using a sample of 192 male astronaut candidates and 22 female astronaut candidates measured in 1979 and 1980 (Reference 365). The 5th percentile stature of the male population is 167.9 cm (66.1 inches) and the 95th percentile male stature is 189.0 cm (74.4 inches). The 5th percentile stature of the female population is 157.6 cm (62.0 in) and the 95th percentile female is 175.7 cm (69.2 in).
d. Although the motions apply to a microgravity condition, the effects of spinal lengthening have not been considered.

MSIS-341

Figure 3.3.3.3.1-5. Microgravity Foot Restraint Reach Boundaries—Side to Side (Using Flexible Arch Support Foot Restraint Configuration

Type of task	Adjustment
Finger tip operation	+7.0 cm (2.8 in)
Full hand grasp	-5.5 cm (2.2 in)

Reference: 310, page 84

MSIS-274

Figure 3.3.3.3.1-6. Adjustment to Thumb and Forefinger Grasp Reach Boundaries for Other Types of Grasping Tasks

3.3.3.3.2 Strike Reach Envelope Data Design Requirements

{L}

If abrupt high accelerations are expected, items within the strike envelope shall be designed to minimize injury to the crewmember. Body strike envelopes as defined in Figures 3.3.3.3.2-1 and 3.3.3.3.2-2 shall be used as appropriate.

(Refer to Paragraph 6.3.3, Mechanical Hazards Design Requirements, for requirements for protection from mechanical hazards).

3.3.4 Neutral Body Posture

{O}

3.3.4.1 Introduction

{O}

This section describes the posture that the body assumes in microgravity. Implications for habitat and crew station design are given.

3.3.4.2 Neutral Body Posture Design Considerations

{O}

The crewmembers should not be expected to maintain a 1-G posture in a microgravity environment. Having to maintain some 1-G postures in microgravity may produce stress when muscles are called on to supply forces that were normally supplied by gravity. Stooping and bending are examples of positions that cause fatigue in microgravity. In microgravity, the body assumes a neutral body posture. The natural heights and angles of the neutral body posture must be accommodated. Some of the areas to be considered are as follows:

a. Foot Angle - Since the feet are tilted at approximately 111 degrees to a line through the torso, sloping rather than flat shoes or restraint surfaces should be considered.

b. Feet and Leg Placement - foot restraints must be placed under the work surface. The neutral body posture is not vertical because hip/knee flexion displaces the torso backward, away from the footprint. The feet and legs are positioned somewhere between a location directly under the torso (as in standing) and a point well out in front of the torso (as in sitting).

c. Height - The height of the crewmember in microgravity is between sitting and standing height. A microgravity work surface must be higher than one designed for 1-G or partial-gravity sitting tasks.

d. Arm and Shoulder Elevation - Elevation of the shoulder girdle and arm flexion in the neutral body posture also make elevation of the work surface desirable.

e. Head Tilt - In microgravity the head is angled forward and down, a position that depresses the line of sight and requires that displays be lowered.

(Refer to Paragraph 9.2.4, Human/Workstation Configuration for additional information on the design of microgravity workstations.

3.3.4.3 Neutral Body Posture Data Design Requirements

{A}

Space module crew stations shall be configured to accommodate the neutral body posture shown in Figure 3.3.4.3-1.

3.3.5 Body Surface Area

{A}

3.3.5.1 Introduction

{A}

This section provides a means of estimating the body skin surface based on body mass and body stature.

(Refer to Paragraph 3.3.7.3.1.1, Whole Body Mass Design Requirements for whole-body mass data.)

(Refer to Paragraph 3.3.1, Body Size Data Design Requirements, for stature data.)

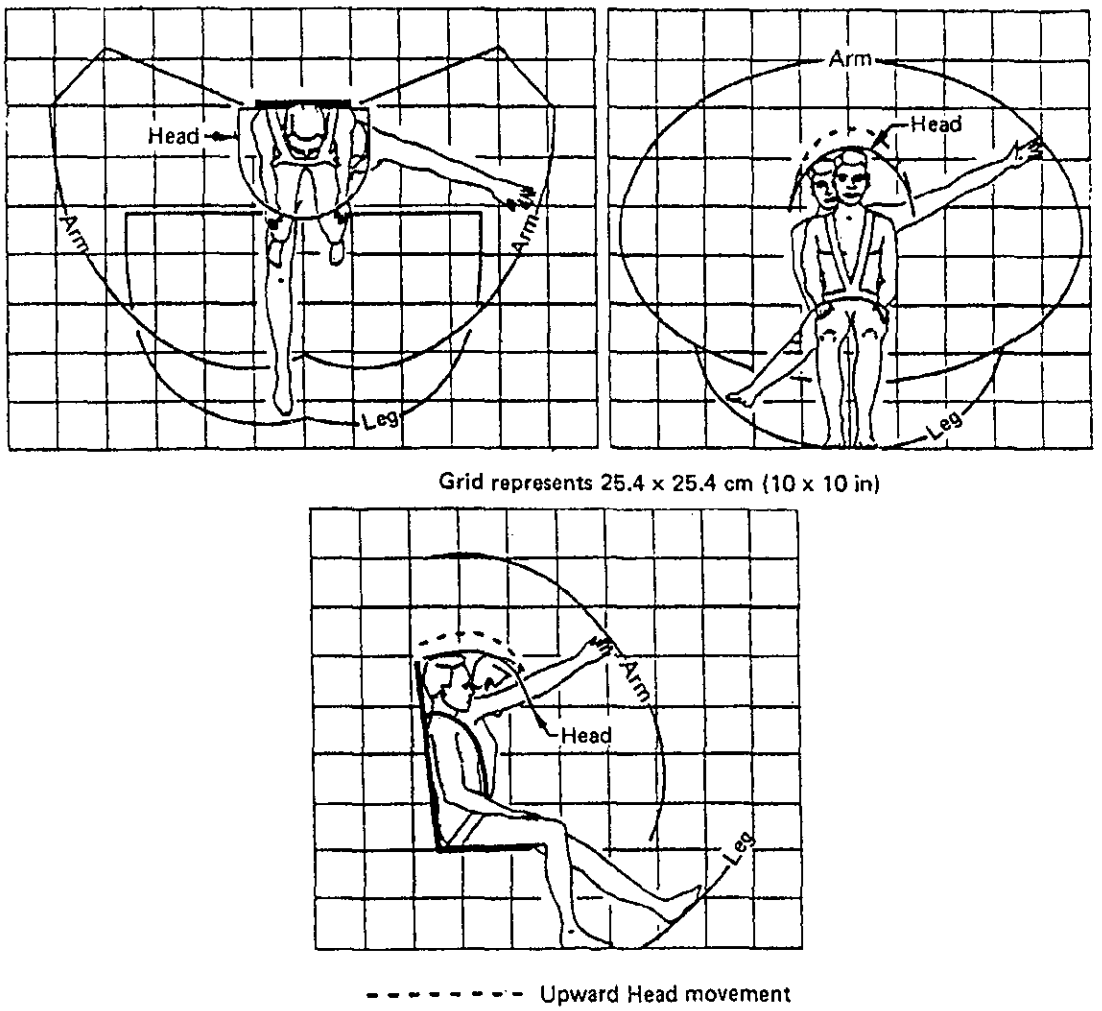

Reference: 21, Page DN3Q4, page 3

Note:
These figures show the envelope that the body extremities (arms, legs, head, and torso) could strike when the seated person is subjected to 4-G acceleration etiher fore and aft or to the side ($\pm G_x$ or $\pm G_y$). (Refer to Paragraph 5.3.1, Introduction, for acceleration vector reference conventions)

MSIS-334

Figure 3.3.3.3.2-1. 4-G Strike Reach Envelope of a Seated 95th Percentile Male Wearing Full Restraint (Seat Belt and Dual Shoulder Harness)

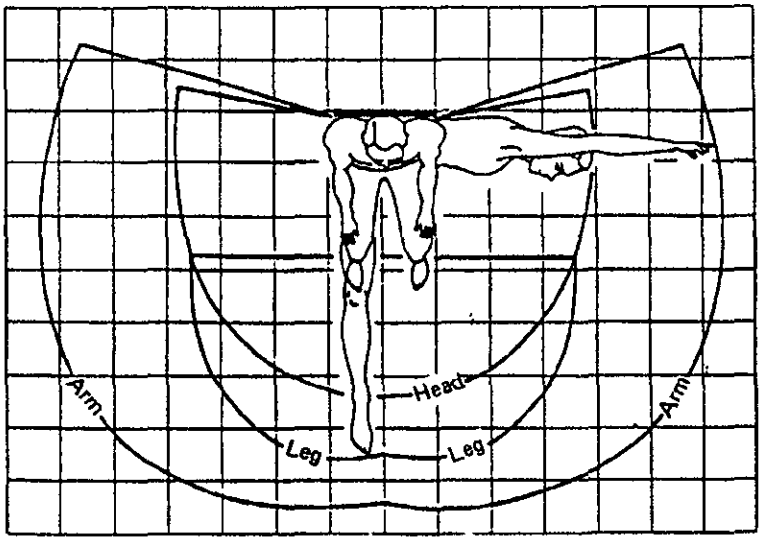

Grid represents 25.4 x 25.4 cm (10 x 10 in)

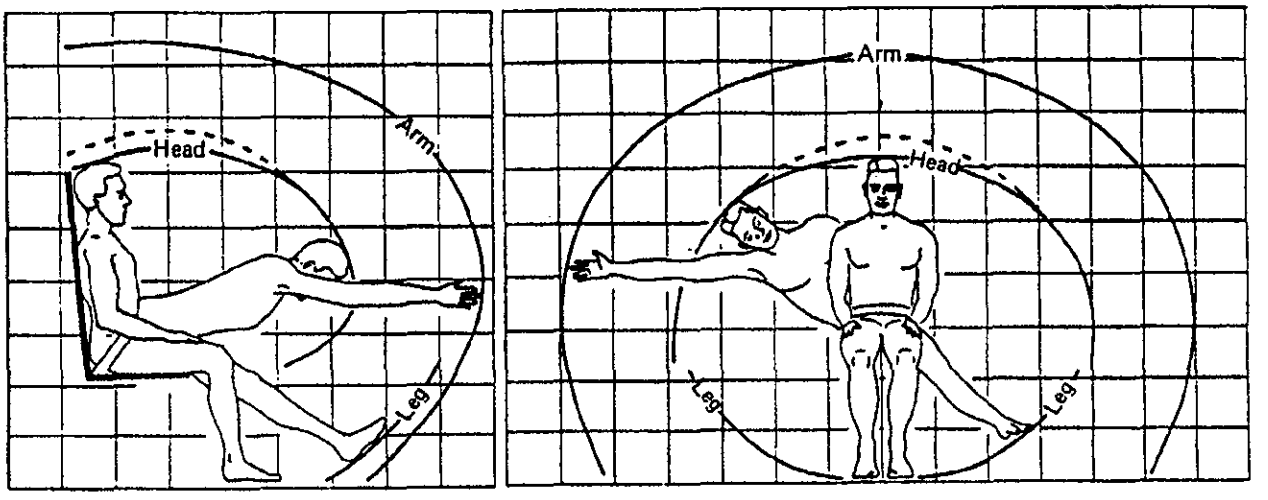

- - - - - - - - - - - Upward head movement

Reference: 21, Page DN3Q4, page 3

Note:
These figures show the envelope that the body extremities (arms, legs, head, and torso) could strike when the seated person is subjected to 4-G acceleration etiher fore and aft or to the side ($\pm G_x$ or $\pm G_y$). (Refer to Paragraph 5.3.1, Introduction, for acceleration vector reference conventions)

MSIS-335

Figure 3.3.3.3.2-2. 4-G Strike Reach Envelope of a Seated 95th Percentile Male Wearing Lap Belt Only

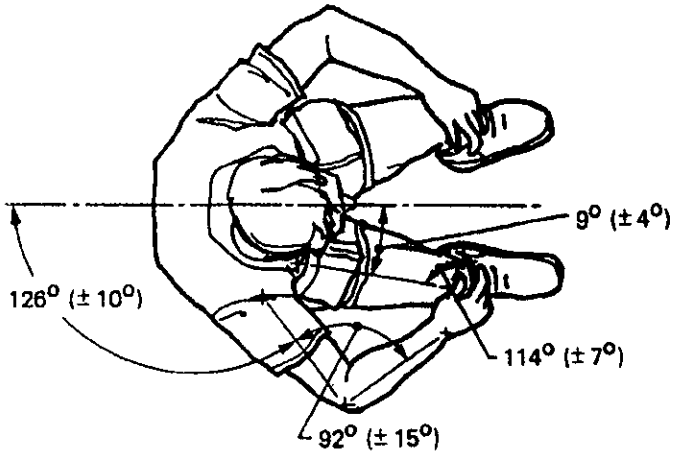

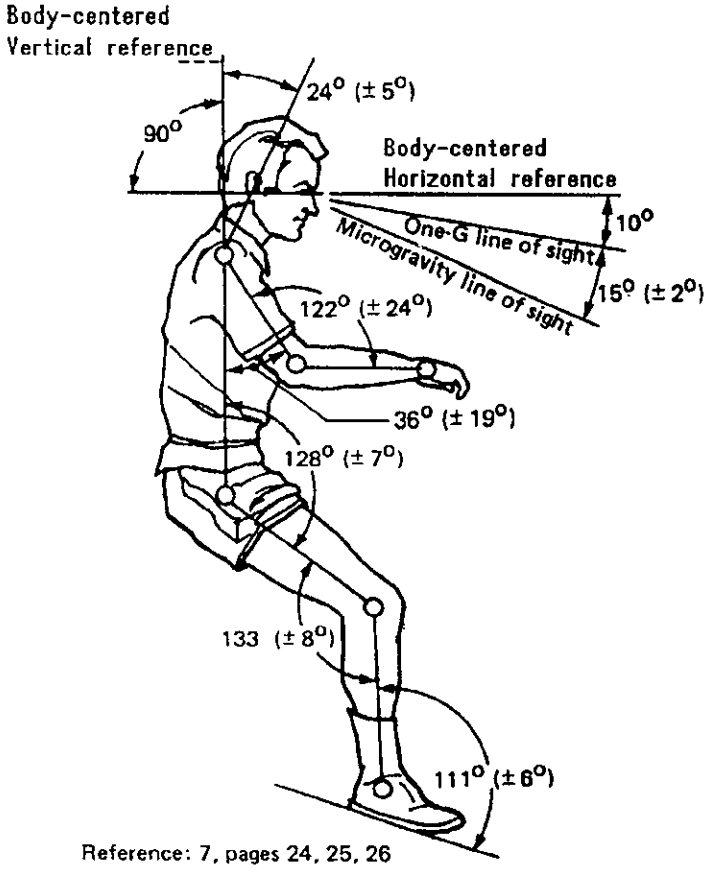

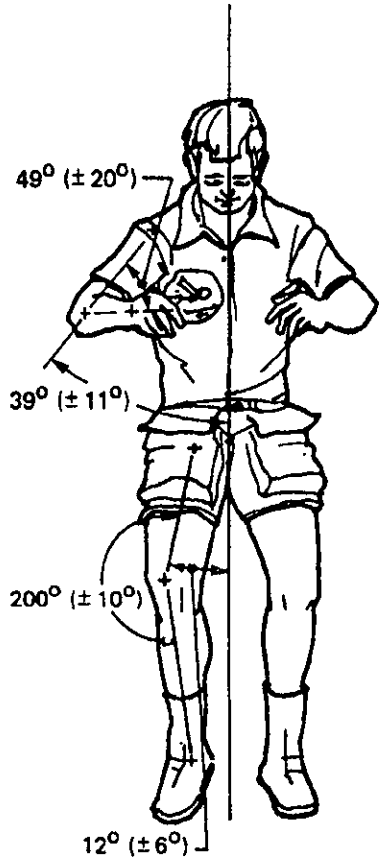

Reference: 7, pages 24, 25, 26
129, Figure 11

MSIS285
Rev. B

Note:
The segment angles shown are means. Values in parentheses are standard deviations about the mean. The data was developed in Skylab studies and is based on the measurement of 12 subjects.

Figure 3.3.4.3-1 Neutral Body Posture

3.3.5.2 Body Surface Area Design Considerations

{A}

The following are considerations for using the body surface area estimations:

a. Gravity Environment - Body surface area estimation equations apply to 1-G conditions only. They do not account for the fluid shifts and spinal lengthening in microgravity.

(Refer to Paragraph 3.2.3.1, Microgravity Effects Design Considerations, for a discussion of corrections for microgravity conditions.)

b. Population - The equations given are most accurate for the White or Black male and female body form. The equations should not be used to estimate the body surface area of the Asian Japanese female. Estimates for the body surface area of the Japanese female will be provided in the next revision of this document.

c. Application of Data - Body surface area data have several space module design applications. These include:

1. Thermal control - Estimation of body heat production for thermal environmental control.

2. Estimation of radiation dosage.

3.3.5.3 Body Surface Area Data Design Requirements

{A}

The body surface area data in Figure 3.3.5.3-1 shall be used as appropriate to achieve effective integration of the crew and space systems. These data apply to 1-G conditions only.

3.3.6 Body Volume

{A}

3.3.6.1 Introduction

{A}

The following section presents information on the volume displaced by the body as a whole and the body segments.

3.3.6.2 Body Volume Data Design Considerations

{A}

The following are considerations for using body volume data:

a. Gravity Environment - The data are based on 1-G conditions and does not account for fluid shifts or spinal lengthening due to weightlessness.

(Refer to Paragraph 3.2.3.1, Microgravity Effects Design Considerations, for a discussion of corrections for microgravity conditions.)

	American male crewmember body surface area
5th Percentile	17,600 cm^2 (2730 in^2)
50th Percentile	20,190 cm^2 (3130 in^2)
95th Percentile	22,690 cm^2 (3520 in^2)

Reference: 272, page 1

Notes:
a. American male crewmember population is defined in paragraph 3.2.1, Anthropometric Database Design Considerations.
b. Data apply to 1-G conditions.

MSIS-284

Figure 3.3.5.3-1. Estimated Body Surface Area of the American Male Crewmember

b. Population - The data provided in this paragraph apply only to the White or Black male body form. The data should not be used to estimate the body volume of the Asian Japanese female. Estimates for the body volume of the Japanese female will be provided in the next revision of this document.

3.3.6.3 Body Volume Data Design Requirements

{A}

The data in this section shall be used as appropriate to achieve effective integration of the crew and space module.

Body volume data for the Japanese female crewmember cannot be specified at this time due to insufficient data.

3.3.6.3.1 Whole-Body Volume Data Design Requirements

{A}

The whole-body volume data for the American male crewmember in 1-G are given in Figure 3.3.6.3.1-1.

3.3.6.3.2 Body Segment Volume Data Design Requirements

{A}

Body segment volume data for the American male crewmember in 1-G are given in Figure 3.3.6.3.2-1.

3.3.7 Body Mass Properties

{A}

3.3.7.1 Introduction

{A}

This section discusses the mass of the human body and engineering properties of the body mass. The following data are provided:

a. Body Mass - Both whole-body and body-segment mass data are provided.

b. Center of Mass - Center of mass locations are defined for both the whole body in defined positions and for body segments.

c. Body Moment of Inertia - Moment of inertia data are provided for the whole body in defined positions and for body segments.

All data are based 1-G measurements.

	American male crewmember body volume
5th Percentile	68,640 cm^3 (4190 in^3)
50th Percentile	85,310 cm^3 (5210 in^3)
95th Percentile	101,840 cm^3 (6210 in^3)

Reference: 276, pages 80, 81

Notes:

a. These data apply to 1-G conditions only.

b. American male crewmember population is defined in Paragraph 3.2.1, Anthropometric Database Design Considerations

MSIS-283

Figure 3.3.6.3.1-1 Whole Body Volume of American Male Crewmember

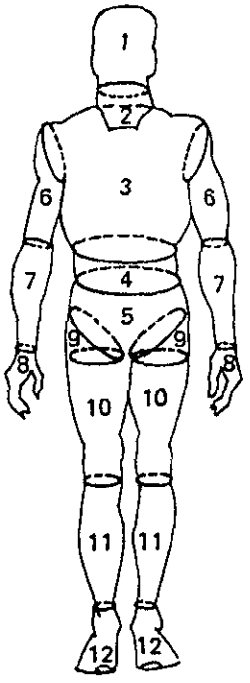

Segment		Volume, cm^3 (in^3)		
		5th percentile	50th percentile	95th percentile
1	Head	4260 (260)	4400 (270)	4550 (280)
2	Neck	930 (60)	1100 (70)	1270 (80)
3	Thorax	20420 (1250)	26110 (1590)	31760 (1940)
4	Abdomen	2030 (120)	2500 (150)	2960 (180)
5	Pelvis	9420 (570)	12300 (750)	15150 (920)
6	Upper arm *	1600 (100)	2050 (130)	2500 (150)
7	Forearm *	1180 (70)	1450 (90)	1720 (100)
8	Hand	460 (30)	530 (30)	610 (40)
9	Hip flap *	2890 (180)	3640 (220)	4380 (270)
10	Thigh minus flap *	5480 (330)	6700 (410)	7920 (480)
11	Calf *	3320 (200)	4040 (250)	4760 (290)
12	Foot *	840 (50)	1010 (60)	1180 (70)
5 + 4 + 3	Torso	31870 (1940)	40910 (2450)	49870 (3040)
9 + 10	Thigh *	8360 (510)	10340 (630)	12300 (750)
7 + 8	Forearm plus hand *	1640 (100)	1980 (120)	2320 (140)

Reference: 276, pages 32-79

Notes:
* Average of right and left sides
a. These data apply to 1-G conditions only.
b. The American male crewmember population is defined in Paragraph 3.2.1, Anthropometric Database Design Considerations

MSIS-282

Figure 3.3.6.3.2-1. Body Segments Volume of the American Male Crewmember

3.3.7.2 Body Mass Properties Design Considerations

{A}

The following are considerations for using the body mass properties data:

a. Effects of Microgravity on the Body - Microgravity causes fluids to shift upward in the body and leave the legs. This results in an upward shift of the center of mass for the whole body and a loss of mass in the leg segments.

(Refer to Paragraph 3.2.3.1, Microgravity Effects Design Considerations for information to estimate the impact of microgravity on the body mass data.)

b. Population - The only body mass data provided for the Japanese female is whole body mass. Japanese female crewmember center of mass and moment of inertia data cannot be specified at this time due to insufficient data.

c. Body Weight Versus Body Mass - Although body mass remains constant, body weight will depend on gravity conditions. In 1-G body weight is calculated as indicated below:

1. Weight in lbs/32.2 = Mass in slugs

2. Weight in Newtons = mass in Kg X 9.8.

d. Application of Dat - In microgravity, the body mass properties define body reaction to outside forces. These forces can be:

1. Reactive to forces exerted by the crewmember or a hand tool.

2. Active forces from devices such as the Manned Maneuvering Unit.

Both whole-body and body segment mass properties are given. The reaction of the body to a force depends on both the mass and the relative positions of the body segments. The whole-body center of mass and moment of inertia data are provided for 8 predefined positions. whole-body mass properties for other positions would have to be determined by mathematically combining the mass properties of the individual segments.

3.3.7.3 Body Mass Properties Data Design Requirements

{A}

The data in this section shall be used as appropriate to achieve effective integration of the crew and space systems.

3.3.7.3.1 Body Mass Data Design Requirements

{A}

3.3.7.3.1.1 Whole-Body Mass Data Design Requirements

{A}

Whole-body mass data for the crewmember population in 1-G are in Figure 3.3.7.3.1.1-1.

3.3.7.3.1.2 Body Segment Mass Data Design Requirements

{A}

Body segment mass data for the American male crewmember in 1-G are in Figure 3.3.7.3.1.2-1.

3.3.7.3.2 Center of Mass Data Design Requirements

{A}

3.3.7.3.2.1 Whole-Body Center of Mass Data Design Requirements

{A}

The whole body center of mass location data for the American male crewmember in 1-G are in Figure 3.3.7.3.2.1-1. Equations for locating the whole body center of mass in males of different sizes, are given in Figure 3.3.7.3.2.1-2.

Whole body mass of year 2000 crewmember population (age 40)

Male (American)			Female (Japanese)		
5th percentile	50th percentile	95th percentile	5th percentile	50th percentile	95th percentile
65.8 kg (145.1 lb)	82.2 kg (181.3 lb)	98.5 kg (217.2 lb)	41.0 kg (90.4 lb)	51.5 kg (113.5 lb)	61.7 kg (136.0 lb)

Reference: 16, pages III-92, III-85
308

Notes:

a. These data apply to 1-G conditions only. Fluid losses in microgravity reduce these masses.

b. Year-2000 crewmember population is defined in paragraph 3.2.1, Anthropometic Database Design Considerations.

MSIS-281

Figure 3.3.7.3.1.1-1. Whole Body Mass for Year 2000 Crewmember Population

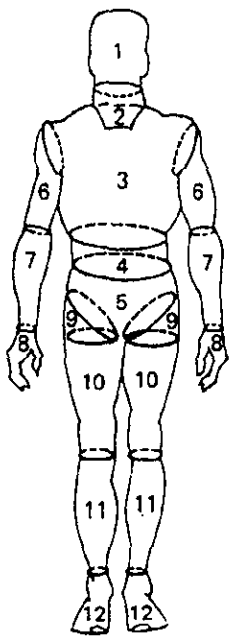

Segment		Mass, gm (oz, weight)		
		5th percentile	50th percentile	95th percentile
1	Head	4260 (150)	4400 (160)	4550 (160)
2	Neck	930 (30)	1100 (40)	1270 (40)
3	Thorax	20420 (720)	26110 (920)	31760 (1120)
4	Abdomen	2030 (70)	2500 (90)	2960 (100)
5	Pelvis	9420 (330)	12300 (430)	15150 (530)
6	Upper arm *	1600 (60)	2050 (70)	2500 (90)
7	Forearm *	1180 (40)	1450 (50)	1720 (60)
8	Hand	460 (20)	530 (20)	610 (20)
9	Hip flap *	2890 (100)	3640 (130)	4380 (150)
10	Thigh minus flap *	5480 (190)	6700 (240)	7920 (280)
11	Calf *	3320 (120)	4040 (140)	4760 (170)
12	Foot *	840 (30)	1010 (40)	1180 (40)
5 + 4 + 3	Torso	31870 (1120)	40910 (1440)	49870 (1760)
9 + 10	Thigh *	8360 (290)	10340 (360)	12300 (430)
7 + 8	Forearm plus hand *	1640 (60)	1980 (70)	2320 (80)

Reference: 276, pages 32-79 With Updates

Notes:
a. These data apply to 1-G conditions.
b. The American male crewmember population is defined in Paragraph 3.2.1, Anthropometric Database Design Considerations
* Average of right and left sides

MSIS 280
Rev. A

Figure 3.3.7.3.1.2-1. Mass of Body Segments for the American Male Crewmember

Whole body center of mass for the American male crewmember (1 gravity only) cm (in)				
	Dimension	5th percentile	50th percentile	95th percentile
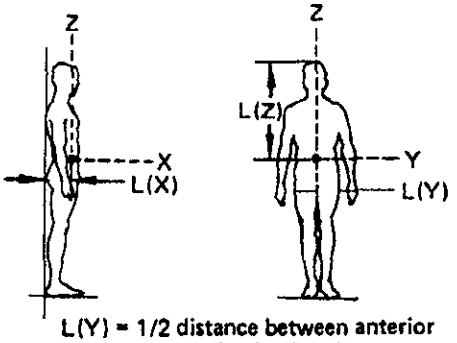 L(Y) = 1/2 distance between anterior superior iliac spine landmarks (1/2 bispinous breadth)				
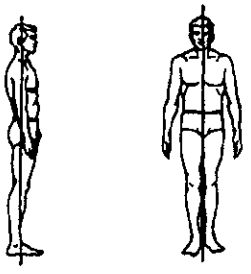 1. Standing	L(X)	8.6 (3.4)	9.1 (3.6)	9.6 (3.8)
	L(Y)	11.7 (4.6)	12.5 (4.9)	13.3 (5.2)
	L(Z)	75.7 (29.8)	80.2 (31.6)	84.7 (33.3)
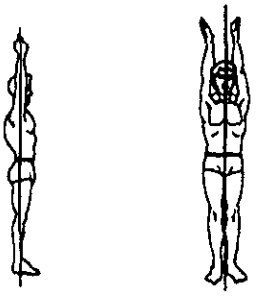 2. Standing, Arms Over Head	L(X)	8.7 (3.4)	9.0 (3.6)	9.4 (3.7)
	L(Y)	11.7 (4.6)	12.5 (4.9)	13.3 (5.2)
	L(Z)	69.9 (27.5)	73.9 (29.1)	77.9 (30.7)

Reference: 16, Chapter IV
250

Notes:

a. These data apply to 1-G conditions. To estimate center of mass location in microgravity, multiply the L(z) figure by 0.9.

b. The American male crewmember population is defined in Paragraph 3.2.1, Anthropometric Database Design Considerations

MSIS-278

Figure 3.3.7.3.2.1-1. Whole Body Center of Mass Location of the American Male Crewmember

Whole body center of mass for the American male crewmember (1 gravity only) cm (in)				
	Dimension	5th percentile	50th percentile	95th percentile
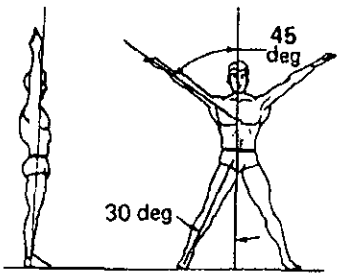 3. Spread Eagle	L(X)	8.2 (3.2)	8.6 (3.4)	9.0 (3.6)
	L(Y)	11.7 (4.6)	12.5 (4.9)	13.3 (5.2)
	L(Z)	69.4 (27.3)	73.5 (28.9)	77.5 (30.5)
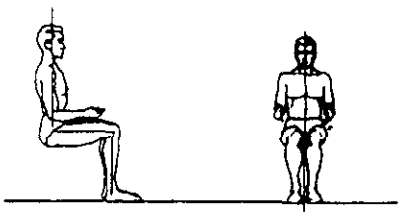 4. Sitting	L(X)	19.4 (7.7)	20.6 (8.1)	21.8 (8.6)
	L(Y)	11.7 (4.6)	12.5 (4.9)	13.3 (5.2)
	L(Z)	65.2 (25.7)	68.6 (27.0)	71.9 (28.3)
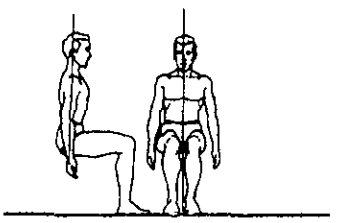 5. Sitting, Forearms Down	L(X)	18.9 (7.4)	20.0 (7.9)	21.1 (8.3)
	L(Y)	11.7 (4.6)	12.5 (4.9)	13.3 (5.2)
	L(Z)	66.0 (26.0)	69.3 (27.3)	72.5 (28.6)

Reference: 16, Chapter IV
250

Notes:
a. These data apply to 1-G conditions. To estimate center of mass location in microgravity, multiply the L(z) figure by 0.9
b. The American male crewmember population is defined in Paragraph 3.2.1, Anthropometric Database Design Considerations

MSIS-278 of 3

Figure 3.3.7.3.2.1-1. Whole Body Center of Mass Location of the American Male Crewmember (Continued)

Whole body center of mass for the American male crewmember (1 gravity only) cm (in)				
	Dimension	5th percentile	50th percentile	95th percentile
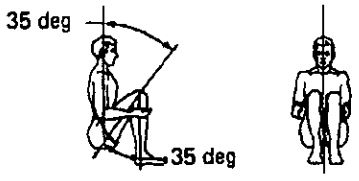 6. Sitting, Thighs Elevated	L(X)	17.6 (6.9)	18.8 (7.4)	20.1 (7.9)
	L(Y)	11.7 (4.6)	12.5 (4.9)	13.3 (5.2)
	L(Z)	57.3 (22.5)	59.4 (23.4)	61.5 (24.2)
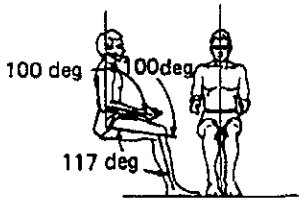 7. Mercury Configuration	L(X)	19.4 (7.6)	20.5 (8.1)	21.5 (8.5)
	L(Y)	11.7 (4.6)	12.5 (4.9)	13.3 (5.2)
	L(Z)	66.8 (26.3)	69.9 (27.5)	73.0 (28.7)
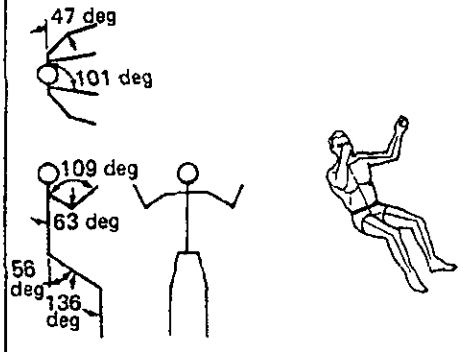 8. Relaxed (weightless)	L(X)	18.0 (7.1)	18.8 (7.4)	19.6 (7.7)
	L(Y)	11.7 (4.6)	12.5 (4.9)	13.3 (5.2)
	L(Z)	68.0 (26.8)	70.9 (27.9)	73.7 (29.0)

Reference: 16, Chapter IV
250

Notes:
a. These data apply to 1-G conditions. To estimate center of mass location in microgravity, multiply the L(z) figure by 0.9.
b. The American male crewmember population is defined in Paragraph 3.2.1, Anthropometric Database Design Considerations

MSIS-278

Figure 3.3.7.3.2.1-1. Whole Body Center of Mass Location of the American Male Crewmember (Continued)

Location of center of mass, cm = [A x (stature, cm)] + [B x (weight, lbs)] + [C]

Posture	Dimension	A	B	C	SE* (cm)	R**
1. Standing	L (X)	−0.035	0.024	11.008	0.33	0.7636
	L (Y)	0	0.021	8.609	0.89	0.4310
	L (Z)	0.486	−0.014	−4.775	1.33	0.9329
2. Standing (arms over head)	L (X)	−0.040	0.020	12.632	0.45	0.5823
	L (Y)	0	0.021	8.609	0.89	0.4310
	L (Z)	0.416	−0.007	0.305	1.52	0.8927
3. Spread eagle	L (X)	−0.031	0.020	10.443	0.36	0.6706
	L (Y)	0	0.021	8.609	0.89	0.4310
	L (Z)	0.392	0.002	2.547	1.48	0.8921
4. Sitting	L (X)	0.080	0.010	4.450	0.56	0.7900
	L (Y)	0	0.021	8.609	0.89	0.4310
	L (Z)	0.344	−0.004	7.327	1.46	0.8632
5. Sitting (thighs elevated)	L (X)	0.041	0.022	7.405	0.66	0.7104
	L (Y)	0	0.021	8.610	0.89	0.4310
	L (Z)	0.212	−0.002	21.582	1.24	0.7801
6. Sitting (with arms down)	L (X)	0.075	0.010	4.628	0.51	0.8030
	L (Y)	0	0.021	8.609	0.89	0.4310
	L (Z)	0.355	−0.010	7.389	1.56	0.8489
7. Mercury configuration	L (X)	0.076	0.008	5.253	0.54	0.7828
	L (Y)	0	0.021	8.609	0.89	0.4310
	L (Z)	0.311	−0.002	14.425	1.80	0.7841
8. Weightless	L (X)	0.077	0.001	4.692	0.60	0.6973
	L (Y)	0	0.021	8.609	0.89	0.4310
	L (Z)	0.218	0.017	28.552	3.16	0.5015

MSIS-279

Reference: 250

Notes:
– Refer to Figure 3.3.7.3.2.1-1 for measurement landmarks

*SE = Standard error of the estimate

**R = Multiple correlation coefficient

a. These data apply only to 1-G conditions. To estimate center of mass location in microgravity, multiply the L (z) figure by 0.9.
b. The American male crewmember population is defined in paragraph 3.2.1, Anthropometric Database Design Considerations.

Figure 3.3.7.3.2.1-2. Whole Body Center of Mass Location for American Male Crewmembers of Different Sizes

3.3.7.3.2.2 Body Segments Center of Mass Data Design Requirements

{A}

Center of mass of body location data for body segments of the American male crewmember in 1-G are in Figure 3.3.7.2.2-1.

3.3.7.3.3 Moment of Inertia Data Design Requirements

{A}

3.3.7.3.3.1 Whole-Body Moment of Inertia Data Design Requirements

{A}

Whole-body moments of inertia data for the American male crewmember in 1-G are in Figure 3.3.7.3.3.1-1.

3.3.7.3.3.2 Body Segments Moment of Inertia Data Design Requirement

{A}

Body segment moments of inertia data for the American male crewmember in 1-G are in Figure 3.3.7.3.3.2-1.

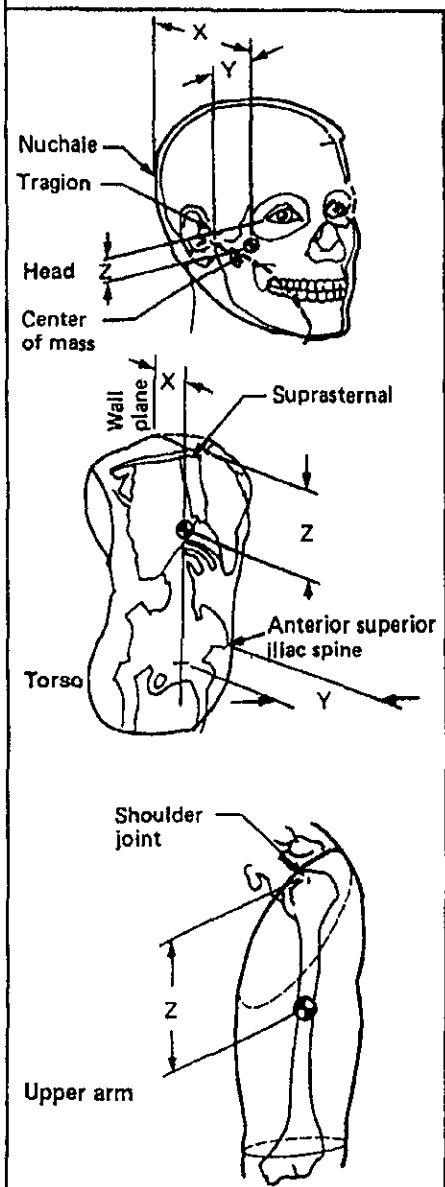

Center of mass location, cm (in)	5th percentile			50th percentile			95th percentile		
	X	Y	Z	X	Y	Z	X	Y	Z
Head	9.4 (3.7)	6.8 (2.7)	2.1 (0.8)	10.4 (4.1)	7.2 (2.8)	2.3 (0.9)	11.5 (4.5)	7.7 (3.0)	2.5 (1.0)
Torso	8.4 (3.3)	13.8 (5.4)	21.0 (8.3)	10.0 (3.9)	15.8 (6.2)	21.8 (8.6)	11.6 (4.6)	17.8 (7.0)	22.6 (8.9)
Upper arm	*	*	14.1 (5.6)	*	*	14.9 (5.9)	*	*	15.7 (6.2)

Reference: 16, Chapter IV

Notes:
a. These data apply to 1-G conditions only.
b. The American male crewmember population is defined in Paragraph 3.2.1, Anthropometric Database Design Considerations
* Assume symmetry

MSIS-277
1 of 2

Figure 3.3.7.3.2.2-1 Body Segment of Mass for American Male Crewmember

	Center of mass location, cm (in)								
	5th percentile			50th percentile			95th percentile		
	X	Y	Z	X	Y	Z	X	Y	Z
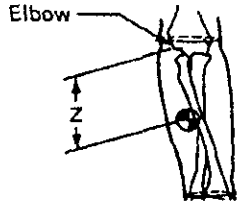 Forearm	*	*	10.9 (4.3)	*	*	11.5 (4.5)	*	*	12.1 (4.8)
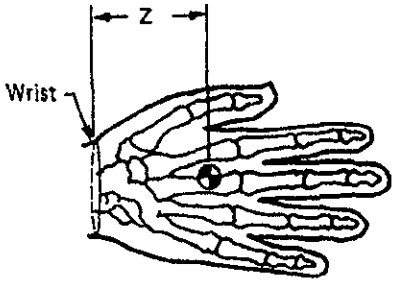 Hand	*	*	5.1 (2.0)	*	*	5.6 (2.2)	*	*	6.0 (2.4)
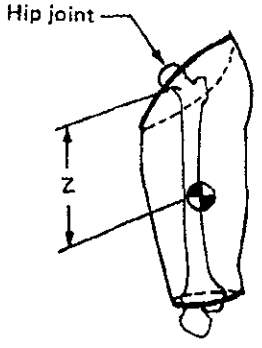 Thigh	*	*	17.0 (6.7)	*	*	18.0 (7.1)	*	*	19.1 (7.5)

Reference: 16, Chapter IV

*Assume symmetry

Notes:
a. These data apply to 1-G conditions only.
b. The American male crewmember population is defined in Paragraph 3.2.1, Anthropometric Database Design Considerations
* Assume symmetry

MSIS-277
2 of 2

Figure 3.3.7.3.2.2-1 Body Segment of Mass for American Male Crewmember (Continued)

Moment of inertia, g-cm^2 x 10^6 (lb-in-sec^2)				
Posture	Axis	5th percentile	50th percentile	95 percentile
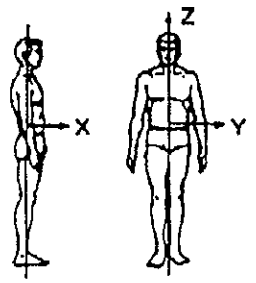 1. Standing	X	106.5 (94.2)	144.5 (101.3)	182.3 (161.2)
	Y	94.9 (83.9)	129.2 (114.3)	163.4 (144.5)
	Z	10.3 (9.1)	14.4 (12.7)	18.5 (16.4)
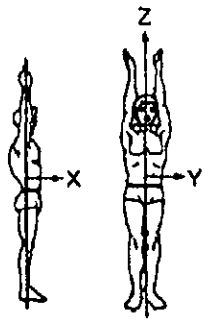 2. Standing, Arms Over Head	X	141.0 (124.7)	191.9 (169.7)	242.6 (214.6)
	Y	124.6 (110.2)	172.9 (152.9)	221.0 (195.5)
	Z	10.6 (9.4)	14.1 (12.5)	17.5 (15.5)
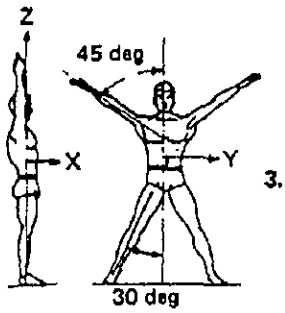 3. Spread Eagle	X	137.2 (121.3)	190.4 (168.4)	243.4 (215.3)
	Y	104.2 (92.2)	144.8 (128.1)	185.2 (163.8)
	Z	32.0 (28.3)	46.6 (41.2)	61.3 (54.2)
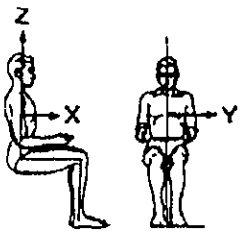 4. Sitting	X	57.3 (50.7)	76.9 (68.0)	96.5 (85.3)
	Y	62.0 (54.8)	83.2 (73.6)	104.3 (92.2)
	Z	30.7 (27.2)	42.4 (37.3)	54.0 (47.8)

Reference: 16, IV-42, IV-25

Notes:
a. These data apply to 1-G conditions only.
b. The American male crewmember population is defined in Paragraph 3.2.1, Anthropometric Database Design Considerations

MSIS-276

Figure 3.3.7.3.3.1-1. Whole Body Moment of Inertia for the American Male Crewmember

Moment of inertia, g-cm^2 x 10^6, (lb-in-sec^2)				
Posture	Axis	5th percentile	50th percentile	95 percentile
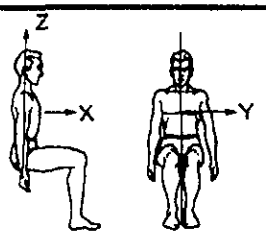 5. Sitting, Forearms Down	X	59.2 (52.4)	77.6 (68.6)	96.0 (84.9)
	Y	63.9 (56.5)	86.3 (76.3)	108.6 (96.0)
	Z	30.9 (27.3)	42.8 (37.9)	54.6 (48.3)
6. Sitting, Thighs Elevated 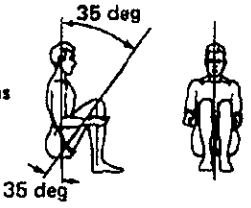	X	37.6 (33.3)	48.7 (43.1)	59.8 (52.9)
	Y	37.2 (32.9)	46.6 (41.2)	55.8 (49.3)
	Z	23.9 (21.1)	33.7 (29.8)	43.5 (38.5)
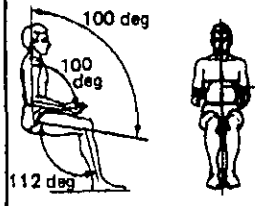 7. Mercury Configuration	X	62.5 (55.3)	82.2 (72.7)	101.8 (90.0)
	Y	69.6 (61.6)	95.5 (84.5)	121.3 (107.3)
	Z	31.9 (28.2)	43.0 (38.0)	54.0 (47.8)
8. Relaxed (Weightless) (Does not account for spinal lengthening) 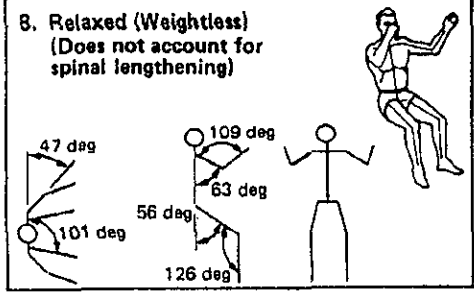	X	88.0 (77.8)	114.5 (101.3)	140.9 (124.6)
	Y	84.1 (74.4)	109.6 (96.9)	134.8 (119.2)
	Z	39.8 (35.2)	50.5 (44.7)	61.2 (54.1)

Reference: 16, IV-42, IV-25

Notes:
a. These data apply to 1-G conditions only.
b. The American male crewmember population is defined in Paragraph 3.2.1, Anthropometric Database Design Considerations

MSIS-276 of 2

Figure 3.3.7.3.3.1-1. Whole Body Moment of Inertia for the American Male Crewmember (Continued)

Moment of inertia, g-cm^2 x 10^3, (lb-in-sec^2 x 10^3)				
Segment	Axis	5th percentile	50th percentile	95th percentile
Head 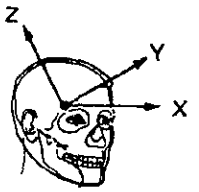	X	195.2 (172.7)	207.1 (183.2)	218.9 (193.6)
	Y	221.8 (196.2)	236.8 (209.4)	251.6 (222.6)
	Z	144.9 (128.1)	153.2 (135.5)	161.4 (142.7)
Neck 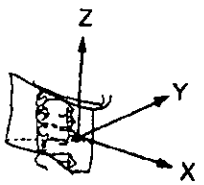	X	13.4 (11.9)	18.2 (16.1)	23.0 (20.3)
	Y	16.6 (14.7)	22.0 (19.5)	27.4 (24.2)
	Z	20.3 (17.9)	27.5 (24.3)	34.6 (30.6)
Thorax 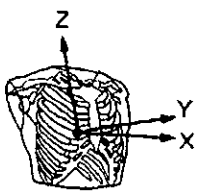	X	3509.6 (3103.9)	5312.0 (4697.9)	7100.2 (6279.4)
	Y	2556.3 (2260.8)	3920.6 (3467.4)	5274.0 (4664.3)
	Z	2153.8 (1904.8)	3320.1 (2936.3)	4475.5 (3958.1)
Abdomen 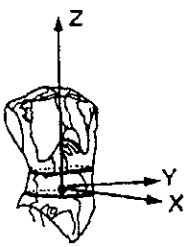	X	116.6 (103.1)	175.2 (155.0)	233.2 (206.2)
	Y	63.3 (56.0)	98.2 (86.8)	132.6 (117.3)
	Z	173.6 (153.5)	265.4 (234.7)	356.1 (315.0)
Pelvis 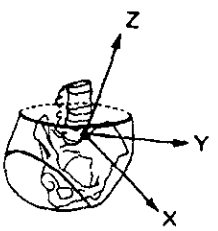	X	713.7 (631.2)	1123.4 (993.6)	1528.9 (1352.1)
	Y	646.4 (571.7)	1033.5 (914.0)	1416.4 (1252.7)
	Z	820.0 (752.2)	1303.6 (1152.9)	1782.0 (1576.0)

Reference: 276, pages 32-79

Notes:
a. These data apply to 1-G conditions only.
b. The American male crewmember population is defined in Paragraph 3.2.1, Anthropometric Database Design Considerations

MSIS-275
1 of 6

Figure 3.3.7.3.3.2-1. Body Segment Moment of Inertia for the American Male Crewmember

Moment of inertia, g-cm^2 x 10^3, (lb-in-sec^2 x 10^3)				
Segment	Axis	5th percentile	50th percentile	95th percentile
Torso 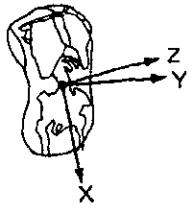	X	10731.4 (9490.9)	15957.8 (14113.0)	21141.0 (18697.1)
	Y	2556.3 (2260.8)	3920.6 (3467.4)	5274.0 (4664.3)
	Z	2153.8 (19004.8)	3320.1 (2936.3)	5274.0 (4664.3)
Right upper arm 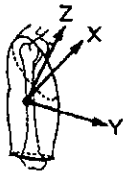	X	92.6 (81.9)	141.7 (125.4)	190.5 (168.6)
	Y	97.6 (86.3)	151.2 (133.7)	204.4 (180.8)
	Z	18.5 (16.3)	29.2 (25.8)	39.8 (35.2)
Left upper arm 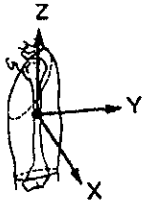	X	89.1 (78.8)	137.2 (121.43)	185.0 (163.6)
	Y	93.3 (82.5)	145.7 (128.9)	197.8 (174.9)
	Z	17.8 (15.8)	28.2 (24.9)	38.4 (34.0)
Right forearm 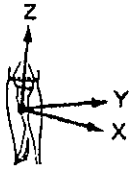	X	65.3 (57.7)	93.9 (83.1)	122.4 (108.3)
	Y	66.3 (58.6)	95.6 (84.6)	124.8 (110.4)
	Z	9.6 (8.5)	14.2 (12.6)	18.8 (16.6)
Left forearm 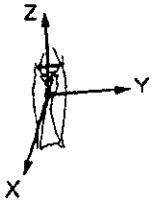	X	63.7 (56.3)	88.9 (78.6)	113.9 (100.7)
	Y	65.4 (57.8)	91.5 (80.9)	117.4 (103.9)
	Z	8.9 (7.9)	12.9 (11.4)	16.9 (14.9)

Reference: 276, pages 32-79

Notes:
a. These data apply to 1-G conditions only.
b. The American male crewmember population is defined in Paragraph 3.2.1, Anthropometric Database Design Considerations

MSIS-275
2 of 6

Figure 3.3.7.3.3.2-1. Body Segment Moment of Inertia for the American Male Crewmember (Continued)

Moment of inertia, g-cm^2 x 10^3, (lb-in-sec^2 x 10^3)							
Segment	Axis	5th percentile		50th percentile		95th percentile	
Right hand 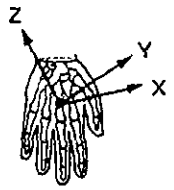	X	10.7	(9.4)	13.8	(12.2)	16.8	(14.9)
	Y	8.7	(7.7)	11.2	(9.9)	13.7	(12.1)
	Z	3.4	(3.0)	4.5	(4.0)	5.5	(4.9)
Left hand 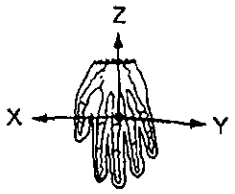	X	10.8	(9.5)	13.6	(12.0)	16.4	(14.5)
	Y	9.0	(7.9)	11.3	(10.0)	13.6	(12.0)
	Z	3.5	(3.1)	4.4	(3.9)	5.3	(4.7)
Right hip flap	X	88.8	(78.5)	134.1	(118.6)	178.9	(158.2)
	Y	116.3	(102.8)	173.1	(153.1)	229.4	(202.9)
	Z	150.4	(133.1)	226.5	(200.3)	301.7	(266.9)
Left hip flap 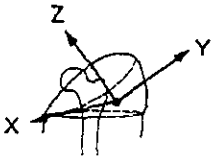	X	85.0	(75.1)	128.8	(133.9)	172.2	(152.3)
	Y	113.4	(100.3)	169.2	(149.7)	224.5	(198.5)
	Z	146.7	(129.8)	219.2	(193.8)	290.8	(257.2)

Reference: 276, pages 32-79

Notes:
a. These data apply to 1-G conditions only.
b. The American male crewmember population is defined in Paragraph 3.2.1, Anthropometric Database Design Considerations

MSIS-275
3 of 6

Figure 3.3.7.3.3.2-1. Body Segment Moment of Inertia for the American Male Crewmember (Continued)

Moment of inertia, g-cm^2 x 10^3, (lb-in-sec^2 x 10^3)				
Segment	Axis	5th percentile	50th percentile	95th percentile
Right thigh minus flap 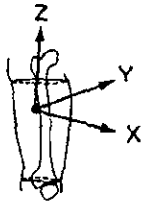	X	453.6 (401.2)	653.1 (577.6)	852.3 (753.8)
	Y	469.2 (415.0)	673.4 (595.6)	877.3 (775.9)
	Z	178.4 (157.8)	255.2 (225.7)	331.3 (293.0)
Left thigh minus flap 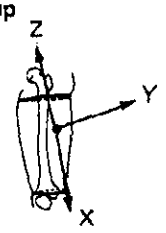	X	437.3 (386.8)	620.9 (549.1)	804.0 (711.1)
	Y	460.7 (407.5)	653.4 (577.9)	845.7 (747.9)
	Z	172.3 (152.4)	246.9 (218.3)	321.0 (283.8)
Right calf 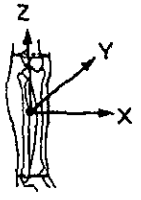	X	430.7 (381.0)	618.1 (546.6)	804.8 (711.8)
	Y	437.7 (387.1)	627.1 (554.6)	816.0 (721.7)
	Z	51.8 (45.8)	72.0 (63.7)	92.1 (81.5)
Left calf 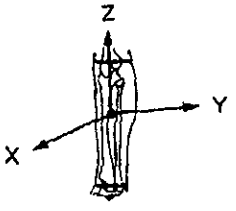	X	434.1 (383.9)	629.6 (556.8)	824.7 (729.4)
	Y	441.4 (390.3)	639.7 (565.8)	837.7 (740.9)
	Z	50.7 (44.9)	72.8 (64.4)	94.7 (83.7)

Reference: 276, pages 32-79

Notes:
a. These data apply to 1-G conditions only.
b. The American male crewmember population is defined in Paragraph 3.2.1, Anthropometric Database Design Considerations

MSIS-275
4 of 6

Figure 3.3.7.3.3.2-1. Body Segment Moment of Inertia for the American Male Crewmember (Continued)

Moment of inertia, g-cm^2 x 10^3, (lb-in-sec^2 x 10^3)								
Segment	Axis	5th percentile		50th percentile		95th percentile		
Right foot 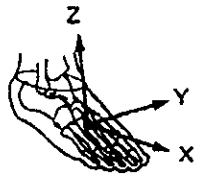	X	6.5	(5.7)	8.7	(7.7)	10.9	(9.6)
	Y	33.8	(29.9)	46.1	(40.7)	58.3	(51.5)
	Z	36.0	(31.8)	48.8	(43.2)	61.7	(54.5)
Left foot 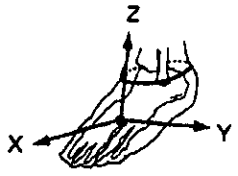	X	6.1	(5.4)	8.3	(7.4)	10.6	(9.3)
	Y	32.4	(28.6)	44.7	(39.5)	57.0	(50.4)
	Z	34.2	(30.2)	47.0	(41.6)	59.8	(52.9)
Right thigh 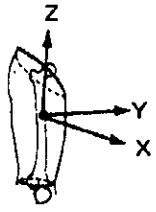	X	1163.7	(1029.2)	1689.8	(1494.4)	2213.9	(1958.0)
	Y	1225.4	(1083.8)	1780.9	(1575.0)	2334.2	(2064.4)
	Z	316.5	(279.9)	464.6	(410.9)	611.3	(540.6)
Left thigh 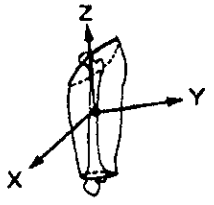	X	1122.6	(992.6)	1623.0	(1435.4)	2121.1	(1875.9)
	Y	1186.3	(1049.2)	1713.2	(1515.1)	2237.5	(1978.8)
	Z	306.2	(270.8)	448.5	(396.6)	589.5	(521.3)

Reference: 276, pages 32-79

Notes:
a. These data apply to 1-G conditions only.
b. The American male crewmember population is defined in Paragraph 3.2.1, Anthropometric Database Design Considerations

MSIS-275

Figure 3.3.7.3.3.2-1. Body Segment Moment of Inertia for the American Male Crewmember (Continued)

Moment of inertia, g-cm^2 x 10^3, (lb-in-sec^2 x 10^3)								
Segment	Axis	5th percentile		50th percentile		95th percentile	
Right forearm plus hand 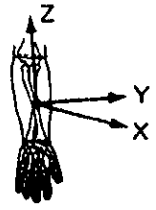	X	238.5	(210.9)	327.8	(289.9)	416.7	(368.5)
	Y	237.5	(210.0)	326.5	(288.8)	415.1	(367.2)
	Z	13.4	(11.9)	19.2	(17.0)	25.0	(22.1)
Left forearm plus hand 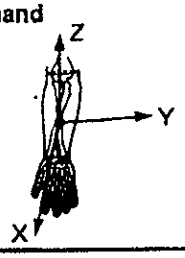	X	234.1	(207.0)	314.1	(277.8)	293.8	(348.3)
	Y	232.8	(205.9)	312.2	(276.1)	391.2	(346.0)
	Z	12.8	(11.4)	17.9	(15.9)	23.0	(20.3)

Reference: 276, pages 32-79

Notes:
a. These data apply to 1-G conditions only.
b. The American male crewmember population is defined in Paragraph 3.2.1, Anthropometric Database Design Considerations

MSIS-275

Figure 3.3.7.3.3.2-1. Body Segment Moment of Inertia for the American Male Crewmember (Continued)

Table of Contents

		Page
4.0	**HUMAN PERFORMANCE CAPABILITIES**	**4-1**
4.1	**INTRODUCTION**	**4-1**
4.2	**VISION**	**4-1**
4.2.1	Introduction	4-1
4.2.2	Vision Design Considerations	4-1
4.3	**AUDITORY SYSTEM**	**4-3**
4.3.1	Introduction	4-3
4.3.2	Auditory System Design Considerations	4-3
4.3.2.1	Auditory Response	4-3
4.3.2.2	Noise Design Considerations	4-3
4.4	**OLFACTION AND TASTE**	**4-5**
4.4.1	Introduction	4-5
4.4.2	Olfaction and Taste Design Considerations	4-5
4.4.2.1	Olfaction	4-5
4.4.2.2	Taste	4-5
4.5	**VESTIBULAR SYSTEM**	**4-5**
4.5.1	Introduction	4-5
4.5.2	Vestibular System Design Considerations	4-6
4.5.2.1	Spatial Disorientation	4-6
4.5.2.2	Space Adaptation Syndrome	4-6
4.6	**KINESTHESIA**	**4-7**
4.6.1	Introduction	4-7

4.6.2	Kinesthestic Design Considerations	4-7
4.7	**REACTION TIME**	**4-8**
4.7.1	Introduction	4-8
4.7.2	Reaction Time Design Considerations	4-8
4.8	**MOTOR SKILLS (Coordination)**	**4-8**
4.8.1	Introduction	4-8
4.8.2	Motor Skills (Coordination) Design Considerations	4-8
4.9	**STRENGTH**	**4-9**
4.9.1	Introduction	4-9
4.9.2	Strength Design Considerations	4-9
4.9.3	Strength Design Requirements	4-10
4.10	**WORKLOAD**	**4-14**
4.10.1	Introduction	4-14
4.10.2	Workload Design Considerations	4-14
4.11	Effects of Deconditioning	4-20
4.11.1	Introduction	4-20
4.11.2	Effects of Deconditioning Design Considerations	4-20
4.11.3	Effects of Deconditioning Design Requirements	4-20

4.0 HUMAN PERFORMANCE CAPABILITIES
{A}

4.1 INTRODUCTION
{A}

The user must keep in mind that much is still unknown about the over-all, long term effects of various space environments on performance capabilities. The data included here were derived from past experience with high-performance aircraft, and the relatively limited experience, particularly with respect to long orbital stays, with past space programs. A lot of the information in this chapter has been derived from one-g data to which trend information from the sources cited above was applied. Although less than perfect or complete data were compiled for this chapter, it is the best information in this field known to exist at this time.

This chapter is based on the premise that designers and mission planners will do a better job if they are familiar with the capabilities of the people for whom they are designing. When people go into space their performance capabilities may change in important ways. The purpose of this chapter is to document these changes.

The voluminous data that exists on human performance capabilities under 1-*G* (Earth) conditions are not included here. This material is covered in other sources (see refs. 4, 19, 143, and especially 336).

4.2 VISION
{A}

4.2.1 Introduction
{A}

This section discusses aspects of visual performance that are, or are likely to be, modified by space travel. For more general information on vision, consult the references provided in Paragraph 4.1.

4.2.2 Vision Design Considerations
{A}

Space-related factors that may affect visual perception as listed below.

a. Acceleration - The effects of acceleration on vision depend on the direction of the force vector.

(Refer to Paragraph 5.3, Acceleration, for additional information on the affects of acceleration.)

1. $+G_z$ acceleration (eyeballs down) results in dimming of vision, followed by "tunnel vision" loss of sight which begins on the periphery and gradually narrows down until only macular (central) vision remains. This is followed by total blackout and then loss of consciousness.

2. $+G_x$ acceleration (eyeballs in) results in loss of peripheral vision. This typically occurs at slightly over 4-G (based on a rate of onset of 1-G per second). Complete loss of vision varies between individuals, and with physical conditioning, training, and experience.

3. $-G_z$ acceleration (eyeballs up) results in diminished vision, red-out (red vision), an increase in the time for the eyes to accommodate, and a blurring or doubling of vision.

4. When exposed to $-G_x$ acceleration (eyeballs out), crewmembers will experience visual symptoms associated with $-G_z$ acceleration (see "3" above).

5. Visual reaction time may be defined as the interval between the onset of a stimulus and the initiation of the crewmember's response. This interval is, in general, lengthened by increased G level.

6. Visual tracking is moderately degraded by increased G level.

b. Vibration - If vibration is sufficiently severe, visual performance will be degraded. The severity depends on the frequency and amplitude of the vibration along with the resonance frequency of the body part involved. Unfortunately, the times when vibration is most likely to be encountered (e.g., lift-off and landing) also tend to be times when vision is important. Displays that must be read during projected periods of high vibration should be designed accordingly. Design techniques to be considered should include display characters which are sufficiently large to be perceived even when blurred and sufficient illumination to avoid scotopic vision which results in a lower Critical Flicker Fusion Frequency.

(Refer to Paragraph 5.5.2.3, Human Response to Vibration, and reference 19 for additional information.)

c. Light in Space - Differences in light transmission and reflectance in space result in some significant differences in available perceptual cues in the extravehicular environment as compared to earth atmosphere.

1. Light Scatter - Atmospheric light scatter does not exist in space due to the lack of particulate and gaseous material. Thus, aerial perspective cues are absent. Figure-ground contrast is increased and shadows appear darker and more clearly defined. Loss of these cues along with other environmental consequences discussed below can degrade perception of object shape, distance, location and relative motion.

2. Luminance Range (Contrast) - The extravehicular environment is marked by a wider range of light intensities than normally encountered on Earth. Shifting gaze from a brighter to a substantially dimmer scene will require time for the eyes to adapt to the lower light level. For example, problems arise on EVA missions when crewmembers go from working in sunlight to working in shadows.

In Figure 4.2.2-1, adaptation time requirements are shown for shifting gaze from a brighter to a dimmer environment. For comparison, Figure 4.2.2-2 indicates luminance values for some typical visual stimuli.

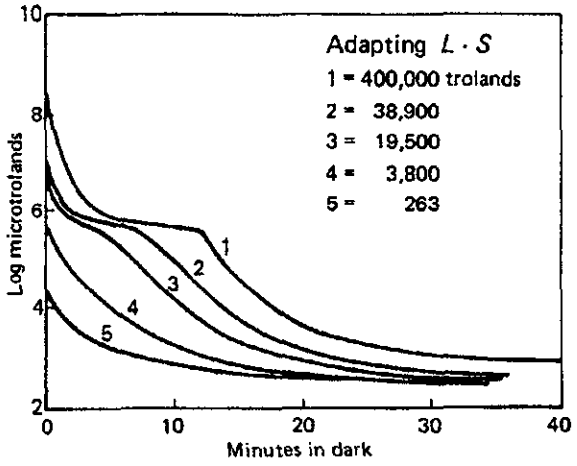

Reference: 338, page 187

Figure 4.2.2-1. Dark Adaptation Thresholds

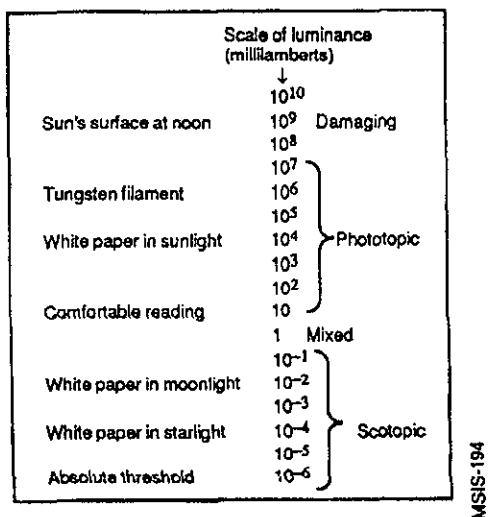

Reference: 337, page 26

Figure 4.2.2-2. Luminance Values for Typical Visual Stimuli

d. Absence of Other Earth Cues:

1. Absence of a Fixed Vertical Orientation - Recognition of familiar objects, faces, and areas (e.g., workstation) is poor when viewed from an orientation significantly different from the established vertical. The viewer must be oriented within approximately 45 degrees of this vertical to perceive the surroundings in a relatively normal fashion. This fact argues for the establishment of a local vertical for each living and working area within a space module.

2. Absence of Fixed Horizon and its accompanying foreground and background cues can be expected to degrade extravehicular perception of object shape, distance, location and relative motion.

3. Absence of a fixed, overhead sun position and its effects on shadow cues is expected to have similar effects as those in 2 (above).

e. Light Flashes - The perception of light flashes has been reported by many crewmembers during periods of darkness at specific orbital locations. The cause is thought to be cosmic rays and/or heavy-particle radiation traversing the head or eyes and triggering a neural response that results in these perceptions.

f. Potential deficits - While visual perception in space is normal in many respects, there are reports of various changes in vision (some of them contradictory) that point out the complex consequences of the above factors. These include Soviet reports of a shift in perceived colors and a reduction in contrast sensitivity, along with a seemingly contradictory report indicating improved visual acuity for distant objects. Some U.S. astronauts have indicated a reduction in near acuity with no apparent change in far acuity, while some crewmembers who wear reading glasses on Earth found they were more dependent on them while in space. Clearly, more research is needed before we can say more about these effects.

4.3 AUDITORY SYSTEM

{A}

4.3.1 Introduction

{A}

There is no evidence that human auditory functioning changes in space. However, there are several factors (e.g., the effects of noise) that should be considered in designing the space habitat.

(Requirements pertaining to acceptable noise levels are described in Paragraph 5.4.3, Acoustic Design Requirements.)

4.3.2 Auditory System Design Considerations

{A}

4.3.2.1 Auditory Response

{A}

Figure 4.3.2.1-1 shows human auditory responses as a function of frequency.

4.3.2.2 Noise Design Considerations

{A}

Noise can have many adverse effects on humans and must be considered when designing the human habitat. Considerations include:

a. Extreme Noise - Extreme noise can cause pain and temporary or permanent hearing loss. The adverse effects of pure tones occur at a level about 10 dB lower than for broadband noise.

b. Extended Exposure - Exposure to loud noise for extended periods of time can cause permanent hearing loss. The degree of exposure that will result in damage depends on intensity and individual sus

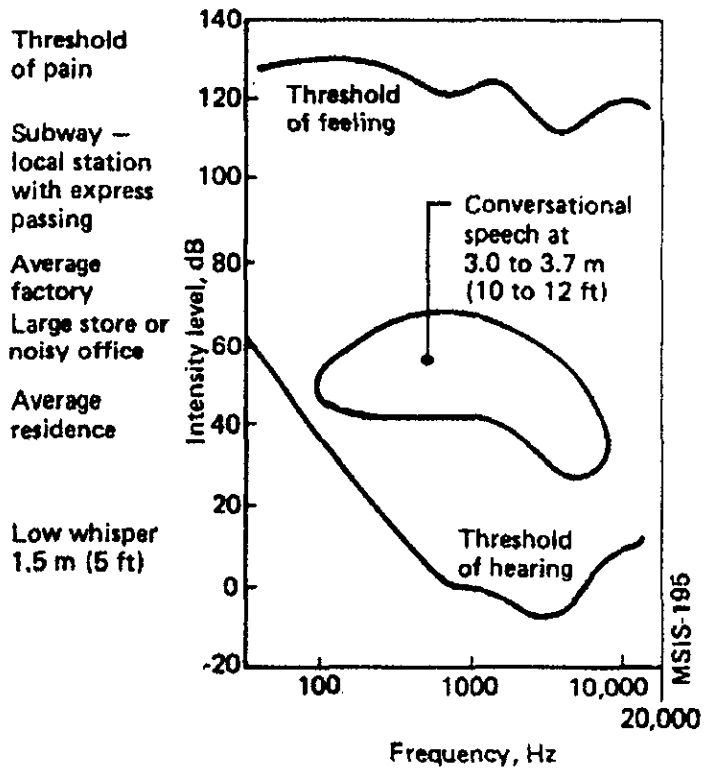

Reference: 335

Figure 4.3.2.1-1. Human Auditory Response as a Function of Frequency

ceptibility.

(Refer to Paragraph 5.4.3.2, Noise Exposure Limits, for additional information.)

c. Communication - Even low levels of noise can interfere with communication.

(Refer to Paragraph 5.4.3.2, Noise Exposure Limits, for additional information.)

d. Task Complexity - Noise can adversely affect performance, with the effects being greater for more complex asks.

e. Intermittent Noise - Intermittent noise has more adverse effects than steady-state noise.

f. Adverse Effects - General effects of a noisy environment include fatigue, distractibility, sleep disturbance, irritation, and aggressive behavior.

(Refer to Paragraph 5.4.3.2, Noise Exposure Limits, for additional information.)

g. Psychological Factors - The level of annoyance that noise produces depends on a number of factors. Sensitivity varies greatly among individuals.

1. People are generally less sensitive to noise related to their well-being.

2. People are more sensitive to unpredictable noise.

3. People are more sensitive to noise they feel is unnecessary.

4. People who are most sensitive to noise become increasingly disturbed as the noise persists, whereas the annoyance level of less sensitive individuals remains constant over time.

5. The perceived abrasiveness of certain sounds is subjective and varies considerably among individuals (e.g., consider the potential conflict between opera and rock music lovers).

h. Cabin Pressure - Reduced cabin pressure causes a reduction in sound transmission. This means that crewmembers have to talk louder to be heard which can potentially lead to hoarseness on the part of some crewmembers. The problem becomes more noticeable as the distance between individuals increases.

(Refer to Paragraph 5.4, Acoustics, for additional information.)

4.4 OLFACTION AND TASTE
{A}

4.4.1 Introduction
{A}

Changes in our senses of smell and taste might occur in space. These changes are described below.

4.4.2 Olfaction and Taste Design Considerations
{A}

4.4.2.1 Olfaction
{A}

Aspects of olfaction (smell) that could influence design are presented below.

a. Decreased Sensitivity - There are frequently reported problems with nasal congestion while living in the microgravity environment.

b. Adverse Effects - Unpleasant odors have been associated with a number of medical symptoms including nausea, sinus congestion, headaches, and coughing. Such odors also contribute to general annoyance.

c. Microgravity Odors - Because particulate matter does not settle out in a weightless environment, odor problems in a space habitat may be more severe than under similar Earth conditions. Circulation and filtering will influence the extent of the problem.

d. Visual Cues and Odors - Responses to odors can be accentuated by the presence of visual cues. This increased responsiveness applies to pleasant and unpleasant odors and is something that a designer could potentially put to good use.

4.4.2.2 Taste
{O}

Generally there is a decrement in the sense of taste in microgravity. This is probably caused by the upward shift of body fluids and accompanying nasal congestion. Reports indicate that food judged to be adequately seasoned prior to flight tasted bland in space. Given the important role that food is likely to play in maintaining morale on extended space missions, attention should be paid to this problem.

4.5 VESTIBULAR SYSTEM
{A}

4.5.1 Introduction
{A}

Microgravity results in two categories of vestibular side effects: spatial disorientation and space adaptation syndrome (space sickness), both of which can impair crewmember performance.

4.5.2 Vestibular System Design Considerations
{O}

4.5.2.1 Spatial Disorientation
{O}

Spatial disorientation is experienced by some crewmembers and should be considered in the design of hardware and the planning of missions.

a. Spatial Disorientation - Responses include postural and movement illusions and vertigo. For example, stationary crewmembers may feel that they are tumbling or spinning. These illusions occur with the eyes open or closed.

b. Frequency of Occurrence - The percentage of crewmembers who experience spatial disorientation varies from mission to mission, but averages approximately 50%. The conditions that determine the likelihood and intensity of this disorientation are not well understood.

c. Duration - Some crewmembers may experience spatial disorientation for the first 2 to 4 days of a mission.

d. Activity Schedule - While spatial disorientation need not cause any serious problems, it is advisable not to schedule activities that depend heavily on spatial orientation early in a mission.

4.5.2.2 Space Adaptation Syndrome
{O}

Aspects of space adaptation syndrome (SAS) relevant to the design of space modules and mission planning are presented below.

a. Symptoms - SAS symptoms range from stomach awareness and nausea to repeated vomiting. Symptoms also include pallor and sweating.

b. Incidence and Duration - It appears that approximately 50% of the crewmembers are affected by SAS. Symptoms last for the first 2 to 4 days of flight.

c. Performance Decrements - A highly motivated crewmember may be able to maintain a high level of performance despite the presence of mild SAS. However, if motion sickness is severe, some crewmembers will be unable to work until the symptoms lessen.

d. Cause - The leading theory as to the cause of SAS is the sensory conflict theory. This theory states that space sickness occurs when patterns of sensory input to the brain from different senses (vestibular, other proprioceptive input, vision) are markedly rearranged, at variance with each other, or differ substantially from expectations.

e. Volume Effects - The severity of SAS tends to increase as the motion which induces sensory conflict and sickness (particularly head movements in the pitch and roll modes) increases. It follows then that as the volume in which a crewmember is working becomes larger, the chances for this sickness inducing motion increases.

f. Space and Motion Sickness - It is assumed that the mechanism of SAS and 1-G motion sickness are similar, but are similar, but it is not possible to predict an individual's susceptibility to space sickness from their susceptibility to Earth motion sickness.

g. Space Sickness Countermeasures.

1. Drugs - Anti-motion sickness pharmaceuticals (usually Scopedex) have reduced the severity of SAS symptoms for some crewmembers, but have appeared to be ineffective for others. It is likely that they would be more universally effective if they were administered prophylactically, either by

injection or orally. The drug should be taken before symptoms develop and absorption from the gut is severely hampered due to the cessation of propulsive motions of the stomach., If a swallowed drug becomes trapped in the stomach, little absorption will take place.

2. Head movements - In some cases restricting head movements has been found effective in reducing the incidence of, and ameliorating the symptoms of, space motion sickness.

4.6 KINESTHESIA

{A}

4.6.1 Introduction

{A}

Kinesthetic is the sense mediated by end organs located in muscles, tendons, and joints, and stimulated by body movements and tensions. Present knowledge of kinesthetic changes occurring when one enters microgravity is limited to estimation of mass and limb position sense.

4.6.2 Kinesthetic Design Considerations

{O}

One experiment has indicated that some kinesthetic sensitivity degradation occurs for a few crewmembers. The indications of this experiment are provided below.

a. Mass Versus Weight - In a weightless environment, increments in mass must be at-least twice as large as weight increments in a-1-G environment before they can be discriminated (see Figure 4.6.2-1).

b. Barely Noticeable Differences - For two masses to be perceived as different under microgravity conditions, they must differ by at least 10% (see Figure 4.6.2-1).

c. Mass and Acceleration - Differential sensitivity for mass under microgravity conditions can be improved by increasing the acceleration force imposed on the object.

d. Mass Estimation - Absolute judgements of mass tend to be lower under microgravity than under 1-G.

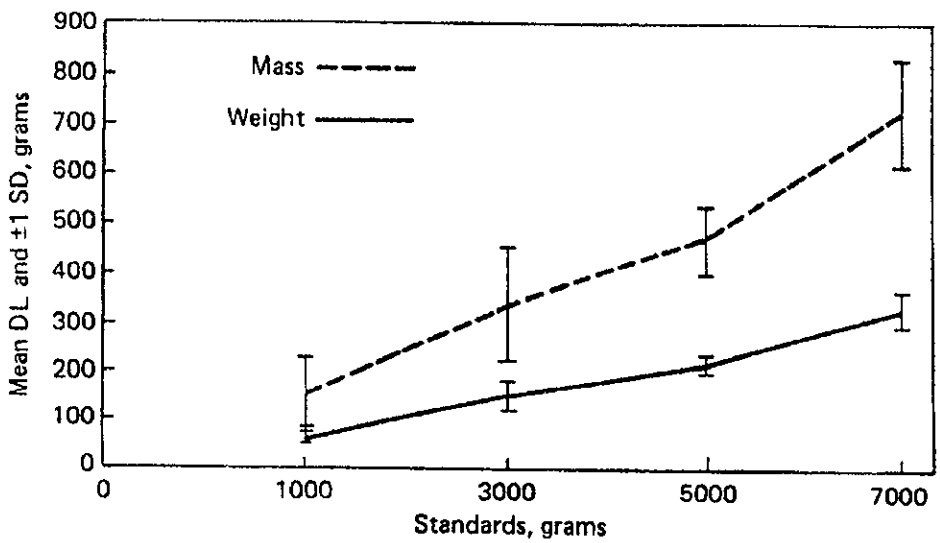

Reference: 78, page 1-90

MSIS-196

Figure 4.6.2-1. Mean Difference Thresholds (DL) and Associated Standard Deviations (SD) Plotted for Each Standard Under Both Weight and Mass Conditions

4.7 REACTION TIME
{A}

4.7.1 Introduction
{A}

There appears to be some slowing of reaction times in space, although little precise data are available.

The subject of this Section, 4.7.2, is actually Response Time. This time period consists of two phases: 1) Reaction Time which is the time between the presentation of a stimulus to a subject and the beginning of the response to that stimulus, and 2) the time during which the actual response to the stimulus is accomplished. It is believed that this section is actually referring to Response Time and the titles and references should be changed accordingly. However, Reaction Time should not be slowed in micro-gravity as it has more to do with motivation and the effects of microgravity on the subject's physiological and emotional states. A good definition of the difference between Response Time and Reaction Time would help in the solution of this dilemma.

4.7.2 Reaction Time Design Considerations
{O}

Information on reaction time that should be considered by designers is provided below.

a. Object Mass - The time required to move an object in microgravity increases as the mass of the object increases.

b. Control Operation - In microgravity, the speed of operating switches (pushbuttons, toggles, rotary switches) is significantly lower than in the 1-G condition.

(Refer to Ref. 171 for more information on visual reaction times; and Ref. 347, for 1-G muscular-reaction time information.)

4.8 MOTOR SKILLS (Coordination)
{O}

4.8.1 Introduction
{O}

There is a minor impairment of motor skills upon first entering microgravity. This decrement is reduced or eliminated after a short period of adaptation.

4.8.2 Motor Skills (Coordination) Design Considerations
{O}

Aspects of human motor skills in space that should be considered by individuals designing for space are provided below.

a. Adaptation Period - Motor skills are somewhat affected when crewmembers are first exposed to microgravity, although these effects tend to diminish or disappear with adaptation. During the period that the crew is adapting to microgravity, fine motor movements are more adversely affected than either medium or gross motor movements. Designers should minimize requirements for crewmembers to exercise fine motor control early in the mission. Switches should be easy to manipulate and care should be taken to preclude accidental activation.

During periods that motor coordination is adapted for the micro-g environment, short returns to an altered g-state (as in reentry, maneuvers, landings, etc.) may result in dyskinesia and dysmetria. This can cause undershooting when reaching for switches for buttons or applying force to control sticks, pedals, knobs, handles, etc.

b. Postural Changes - A change in body posture in microgravity results in a change in the relative position of body parts and can cause decrements in coordination until adaptation occurs. Changes in body

posture result from the crewmembers assuming the increase in height due primarily to spinal column expansion.

(Refer to Section 3, Anthropocentric and Mobility, for additional information on microgravity posture.)

c. Body Part Weight - When moving in microgravity, the muscular system does not have to compensate for the weight of body parts. This changes the muscular forces required for coordinated movement and requires the system to readapt.

d. Large Mass Handling - When properly planned, no difficulty has been encountered by crewmembers in moving large masses in a microgravity environment.

4.9 STRENGTH

{A}

4.9.1 Introduction

{A}

Physical work can be divided into two parts: power and endurance (anaerobic and aerobic performance).

The next section addresses the first of these (power), and how it can influence the design of facilities and equipment to achieve optimal crewmember performance. (Endurance is addressed in Paragraph 4.10.2a).

4.9.2 Strength Design Considerations

{A}

Aspects of human strength that should be understood and considered in designing for the space environment are presented below.

a. Strength - Strength is the ability to generate muscular tension and to apply it to an external object through the skeletal lever system. Sheer muscle mass (thus, body size) is a significant factor, with cross-sectional area of the muscle fibers being a major determinant of the maximum force that can be generated. Maximum muscular force (strength) can be exerted for only a few seconds.

b. Muscular Endurance - Muscular endurance is the duration a submaximal force may be held in a fixed position (Isometric), or the number of times a movement requiring a submaximal force may be repeated (Isotonic). The duration that a fixed percentage of maximum can be held is reasonably constant across individuals.

c. Counterforces - Microgravity does not have certain counterforces that allow people to effectively perform physical work in 1-G. Traction which depends on body weight is absent, as are forces that result from using body weight for counterbalance.

d. Working While Restrained - Crewmembers' work capabilities while restrained can approach the efficiency experienced on Earth-based tasks, but only where workstation design (including fixed and loose equipment) and task procedures are optimized for the microgravity environment.

e. Working Without Restraints - Without proper restraints, a crewmember's work capabilities will generally be reduced and the time to complete tasks increased.

f. Improved Performance - There are situations where a crewmember can achieve improved strength performance in microgravity. These situations occur when the crewmember uses the greater maneuverability of microgravity to achieve a more efficient body position to be able to push off solid surfaces.

g. Deconditioning - Experience in space indicates that both the strength and aerobic power of load bearing muscles in crewmembers decreases during missions

exposing them to microgravity. Exercise programs have been used to counter these deficits but to date have been only partially effective.

(Refer to Paragraph 7.2.3, Reduced Gravity Countermeasures, for information on maintaining strength in space.)

h. Kinematics - The linear motion of free-floating crewmembers can be described by relatively simple equations. The time crewmembers can exert force is governed by the distance they can push before losing physical contact. The force exerted during this time will typically vary as in Figure 4.9.2-1.

The important aspects of this curve are the impulse (Ô FÃdt, or the area under the curve), which will determine departure velocity; and the peak force, which will determine peak acceleration. In the simplest case, for a subject of mass m, an impulse I with a peak force F acting through the subject's center of mass will result in a velocity

v = I/m where v is in ft/x, I is in lbfÃs, and m is in slugs; or v is in m/x, I is in NÃs, and m is in kg and a peak acceleration

a=F/m where a is in ft/s2, F is in lbf, and m is in slugs; or a is in m/s2, F is in N, and m is in kg.

In reality, of course, an impulse will rarely go exactly through the center of mass to produce pure linear motion. For any offset of the force from the center of mass, a percentage of the impulse will go toward producing angular (tumbling) motion, with a corresponding decrease in linear velocity. This percentage depends on the offset distance and the subject's moment of inertia. (Moment of inertia varies considerably with body position, and so is difficult to analyze parametrically, but there will be some tumbling in practically all cases.)

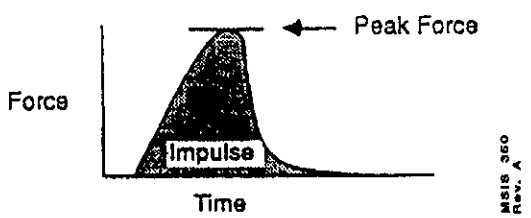

Figure 4.9.2-1. Representation of Force Generated by Free-Floating Crewmember Pushing Off

Figure 4.9.2-2 shows the time that a particular force can be exerted as a function of the magnitude of the force exerted, the mass of the individual, and the distance pushed. The velocity that the crewmember will have as they lose contact with the surface is also given.

4.9.3 Strength Design Requirements

{A}

Strength data that shall be used to guide design work are provided below. The weakest crew member in the specified design population shall be accommodated.

(Refer to Ref. 16 for additional data on 1-G strength.)

a. Grip Force:

1. Grip strength, as a function of the size of the gripped object, is provided for men in Figure 4.9.3-1.

2. Maximum grip strength for men (5th, 50th, and 95th percentile) is given in Figure 4.9.3-2.

3. Grip strength for females is shown in Figure 4.9.3-3.

b. Arm, Hand, and Thumb/Finger Strength - Figure 4.9.3-4 presents arm, hand and thumb/finger strength for fifth percentile males. These figures must be corrected for females (see Figure 4.9.3-5).

Time of force application and push-off velocity
(95th percentile American male — 99.3 kg (219 lb))

Force N (lb)	Time in sec. for 0.3 m (1 ft) push-off	Push-off velocity m/sec (ft/sec)	Time in sec. for 0.6m (2 ft) push-off	Push-off velocity m/sec (ft/sec)
4.45 (1)	3.66	0.16 (0.52)	5.18	0.23 (0.75)
22.25 (5)	1.64	0.37 (1.21)	2.31	0.52 (1.71)
44.50 (10)	1.16	0.52 (1.71)	1.64	0.73 (2.40)
89.00 (20)	0.82	0.73 (2.40)	1.16	1.04 (3.41)

Time of force application and push-off velocity
(72.6 kg (160 lb) individual)

Force N (lb)	Time in sec. for 0.3m (1 ft) push-off	Push-off velocity m/sec (ft/sec)	Time in sec. for 0.6m (2 ft) push-off	Push-off velocity m/sec (ft/sec)
4.45 (1)	3.12	0.19 (0.63)	4.42	0.27 (0.89)
22.25 (5)	1.40	0.43 (1.41)	1.98	0.61 (2.00)
44.50 (10)	0.99	0.61 (2.00)	1.40	0.86 (2.82)
89.00 (20)	0.70	0.86 (2.82)	0.99	1.21 (3.97)

Time of force application and push-off velocity
(5th percentile Japanese female — 40.3 kg (89 lb))

Force N (lb)	Time in sec. for 0.3m (1 ft) push-off	Push-off velocity m/sec (ft/sec)	Time in sec. for 0.6m (2 ft) push-off	Push-off velocity m.sec (ft/sec)
4.45 (1)	2.33	0.26 (0.85)	3.30	0.36 (1.18)
22.25 (5)	1.04	0.57 (1.87)	1.47	0.81 (2.66)
44.50 (10)	0.74	0.82 (2.69)	1.04	1.15 (3.77)
89.00 (20)	0.52	1.15 (3.77)	0.74	1.63 (5.35)

MSIS-197
REV. A

Reference: 335

Note: Please be aware that all of the above data was gathered under 1-g conditions.

Figure 4.9.2-2. Force Application and Push-Off Velocity

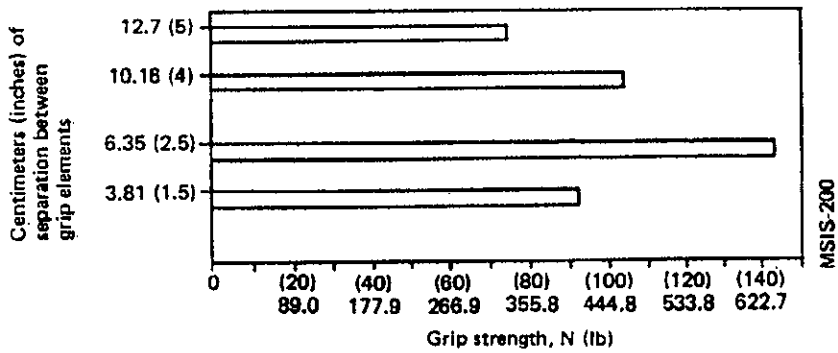

Reference: 1, page 2.5-19

Note:

44 subjects, all pilots or aviation cadets

Figure 4.9.3-1. Male Grip Strength as a Function of the Separation Between Grip Elements

Population	Percentiles, N (lb)			
	5th	50th or mean	95th	Population S.D.
U.S. Air Force personnel, aircrewmen:				
Right hand	467 (105)	596 (134)	729 (164)	80.1 (18.0)
Left hand	427 (96)	552 (124)	685 (154)	71.2 (16.0)

MSIS-201

Reference: 1, page 2.5-18

Figure 4.9.3-2. Grip Strength for Males

Population	Percentiles, N (lb)			
	5th	50th	95th	Population S.D.
U. S. Navy personnel Mean of both hands	258 (58)	325 (73)	387 (87)	39.1 (8.8)
U. S. Industrial workers: Preferred hand	254 (57)	329 (74)	405 (91)	45.8 (10.3)

MSIS-202

Reference: 1, page 2.5-18

Figure 4.9.3-3. Grip Strength for Females

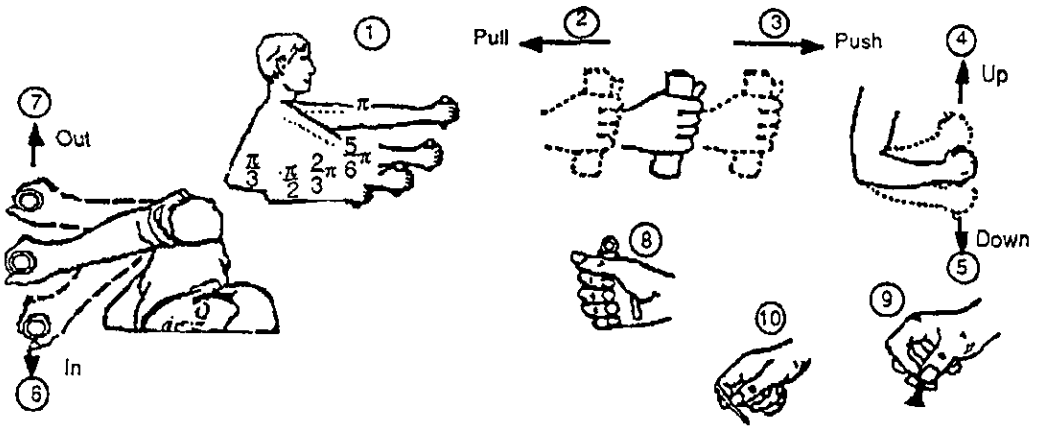

Arm strength (N)												
(1)	(2)		(3)		(4)		(5)		(6)		(7)	
Degree of elbow flexion (rad)	Pull		Push		Up		Down		In		Out	
	L**	R**	L	R	L	R	L	R	L	R	L	R
π	222	231	187	222	40	62	58	76	58	89	36	62
5/6 π	187	249	133	187	67	80	80	89	67	89	36	67
2/3 π	151	187	116	160	76	107	93	116	89	98	45	67
1/2 π	142	165	98	160	76	89	93	116	71	80	45	71
1/3 π	116	107	96	151	67	89	80	89	76	89	53	76

Hand and thumb-finger strength (N)				
	(8)		(9)	(10)
	Hand grip			
	L	R	Thumb-finger grip (Palmer)	Thumb-finger grip (tips)
Momentary hold	250	260	60	60
Sustained hold	145	155	35	35

* Elbow angle shown in radians
** L = Left; R = Right

Arm strength (lb)												
(1)	(2)		(3)		(4)		(5)		(6)		(7)	
Degree of elbow flexion (deg)	Pull		Push		Up		Down		In		Out	
	L	R*	L	R	L	R	L	R	L	R	L	R
180	50	52	42	50	9	14	13	17	13	20	8	14
150	42	56	30	42	15	18	18	20	15	20	8	15
120	34	42	26	36	17	24	21	26	20	22	10	15
90	32	37	22	36	17	20	21	26	16	18	10	16
60	26	24	22	34	15	20	18	20	17	20	12	17

Hand, and thumb-finger strength (lb)				
	(8)		(9)	(10)
	Hand grip			
	L	R	Thumb-finger grip (Palmer)	Thumb-finger grip (tips)
Momentary hold	56	59	13	13
Sustained hold	33	35	8	8

* Left; R = Right

2013

Reference: 2, page 113

Figure 4.9.3-4. Arm, Hand, and Thumb/Finger Strength (5th Percentile Male Data)

c. Male/Female Muscular Strength - Figure 4.9.3-5 provides a comparison of male and female muscular strength for different muscle groups. These data allow a more accurate extrapolation from male to female strength data than is provided by the old method of assuming females have two thirds the strength of men.

(Refer to Ref. 16 for more detailed male/female comparison data.)

d. Static Push Force - Maximal static push forces for adult males are shown in Figure 4.9.3-6. While these data were collected in a 1-G situation, the fact that they do not depend on friction resulting from body weight makes them applicable to microgravity. Corrections will have to be made for females (see Figure 4.9.3-5).

e. Leg Strength - Leg strength for the 5th percentile male as a function of various thigh and knee angles is reported in Figure 4.9.3-7. Estimates of female leg strength can be made from these data using the correction factors provided in Figure 4.9.3-5.

f. Torque Strength - Maximum hand torque data are provided in Figure 4.9.3-8.

4.10 WORKLOAD

{A}

4.10.1 Introduction

{A}

This section covers workload considerations including aerobic power, aerobic endurance, and aerobic efficiency, as well as design factors such as optimum workload, task selection, and task complexity..

4.10.2 Workload Design Considerations

{A}

Workload related factors that should be considered when designing for optimum crewmember performance are presented below.

a. Endurance (Aerobic Power) - Two complex factors determine the limits of an individual's capacity to produce work and generate the requisite power. One of these is the capacity to sustain output over a period of time (this is a function of aerobic power). The second is strength (discussed in Paragraph 4.9).

1. Aerobic power - Aerobic power is the total power that an individual generates. It is related to usable power output by an efficiency factor (see "5" below). Aerobic power is expressed as volume of oxygen used per unit time. It is also commonly expressed in food calories oxidized per unit time, when referring to workload for a given task.

2. Resting metabolic rate - At rest (zero external workload), the ratio of oxygen consumed to body mass has been found to be quite consistent across individuals [3.5 mL/kg/min (0.1 in3/lb/min)] and is called the resting metabolic rate or 1 MET.

3. Maximum aerobic power - An individual's maximum aerobic power can range from two times the resting rate for an invalid to 23 times for a champion marathon. The average person will have a maximum aerobic power of 8 to 12 times resting metabolic rate. As with rest, the energy demands for a given workload are reasonably consistent across individuals. Thus, their ability to perform becomes a function of the ratio of their capacity to the demand.

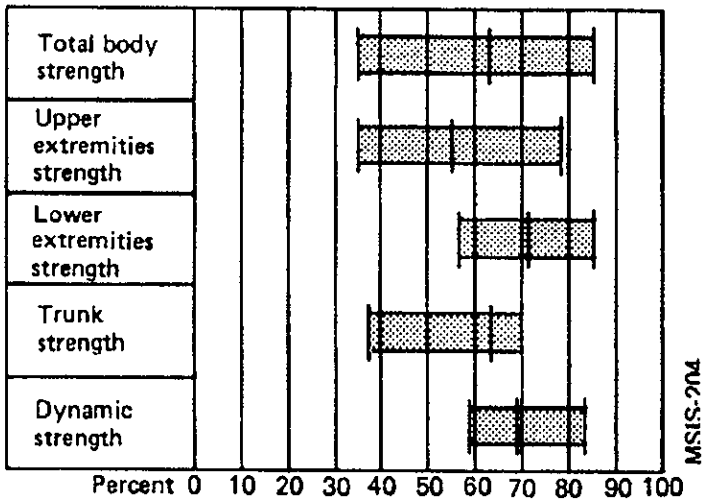

Reference: 16, page VII-50

Note:

Female strength as a percentage of male strength for different conditions. The vertical line within each shaded bar indicates the mean percentage difference. The end points of the shaded bars indicate the range.

Figure 4.9.3-5. Comparison of Female vs. Male Muscular Strength

	Force-plate (1) height	Distances (2)	Force, N (lbf) Means	Force, N (lbf) SD
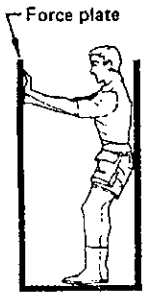	100 percent of shoulder height		Both hands	
		50	583 (131)	142 (32)
		60	667 (150)	160 (36)
		70	983 (221)	271 (61)
		80	1285 (289)	400 (90)
		90	979 (220)	302 (68)
		100	645 (145)	254 (57)
			Preferred hand	
		50	262 (59)	67 (15)
		60	298 (67)	71 (16)
		70	360 (81)	98 (22)
		80	520 (117)	142 (32)
		90	494 (111)	169 (38)
		100	427 (96)	173 (39)
		Percent of thumb-tip reach *		
	100 percent of shoulder height	50	369 (83)	138 (31)
		60	347 (78)	125 (28)
		70	520 (117)	165 (37)
		80	707 (159)	191 (32)
		90	325 (73)	133 (30)
		Percent of span **		

Reference: 1, page 2.5-5, -6

MSIS-205 1 of 2

Figure 4.9.3-6. Maximal Static Push Forces

Force-plate (1) height	Distances (2)	Force, N (lbf)	
		Means	SD
50	100	774 (174)	214 (48)
50	120	778 (175)	165 (37)
70	120	818 (184)	138 (31)
Percent of shoulder height		1-g applicable data	

Reference: 1, page 2.5-5, -6

MSIS 205
2 OF 2
REV. A

Figure 4.9.3-6. Maximal Static Push Forces (Continued)

Notes:

(1) Height of the center of the force plate — 200 mm (8 in.) high by 254 mm (10 in.) long — upon which force is applied.

(2) Horizontal distance between the vertical surface of the force plate and the opposing vertical surface (wall or footrest, respectively) against which the subject brace themselves.

* Thumb-tip reach — distance from backrest to tip of subject's thumb as thumb and fingertips are pressed together.

** Span - the maximal distance betwen a person's fingertips as he extends his arms and hands to each side.

(3) 1-g data

MSIS 205
3 of 3
REV. A

Figure 4.9.3-6. Maximal Static Push Forces (Continued)

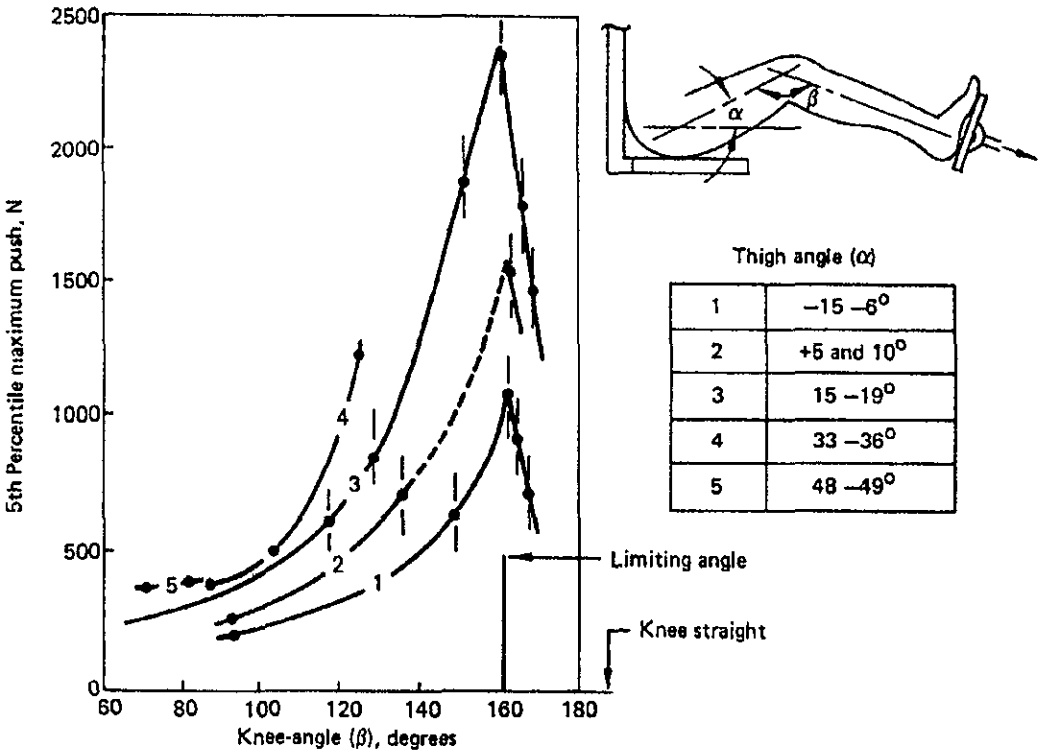

Reference: 2, page 115

MSIS-206

Figure 4.9.3-7. Leg Strength at Various Knee and Thigh Angles (5th Percentile Male Data)

	Unpressurized suit, bare handed	
	Mean	SD
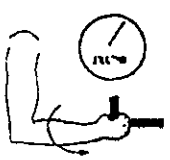 Maximum torque: Suppination, Nm (lb-in.)	13.73 (121.5)	3.41 (30.1)
Maximum torque: Pronation, Nm (lb-in.)	17.39 (153.9)	5.08 (45.0)

Reference: 1, page 2.5-20

MSIS-207 REV. A

Figure 4.9.3-8. Torque Strength

4. Aerobic endurance - Aerobic endurance is a function of the individual's maximum aerobic power, and determines how long an individual can perform tasks of moderate to heavy intensity. Maximum effort can be maintained for only a few minutes, while up to 40% of maximum can be maintained over an 8-hr work shift with typical rest breaks (see Figure 4.10.2-1). Most people would judge work requiring 40% of their maximum aerobic capacity as "moderate" to "heavy", but tolerable for 8 hours. Tasks that may be performed by any of a number of crewmembers should keep metabolic energy requirements 10 to 20% lower than that which would be considered tolerable by the least fit of the users.

5. Aerobic efficiency - In a shirt-sleeve environment on Earth, human efficiency ranges from approximately 35% to below 10%, depending on specific movement patterns. In cycling, for example, the human has an efficiency of about 21%. Thus, the useful power output for an individual expending 500 kcal/hr cycling would be

Aerobic endurance: duration and workload

Percent of individual's V_{O_2} max	Duration[2]	Crewmember mass[3]	28 mL/kg/min kcal/hr[4] (Btu/hr)	42 mL/kg/min kcal/hr[4] (Btu/hr)	56 mL/kg/min kcal/hr[4] (Btu/hr)
100	5 min	54	454 (1800)	680 (2700)	907 (3600)
		74	622 (2470)	932 (3700)	1243 (4930)
90	30 min	54	409 (1620)	621 (2470)	816 (3240)
		74	560 (2220)	839 (3330)	1119 (4440)
80	60 min	54	363 (1440)	544 (2160)	726 (2880)
		74	498 (1980)	746 (2960)	994 (3950)
50	3.5 hr	54	227 (900)	340 (1350)	454 (1800)
		74	311 (1230)	466 (1850)	622 (2470)
40	8.0 hr	54	182 (720)	272 (1080)	363 (1440)
		74	249 (990)	373 (1480)	497 (1970)

Reference: 351

Notes:

1 V_{O_2} = *aerobic power (consumed volume of O_2 per unit time)*
Exemplary fitness levels:
28 mL/kg/min (0.78 in^3 /lb/min) would be considered "fair" for the general female population and is below the average of the U.S. female astronauts selected to date.
42 mL/kg/min (1.16 in^3 /lb/min) would be considered "average" for males and approximates the average for U.S. male astronauts selected to date.
56 mL/kg/min (1.55 in^3 /lb/min) would be considered "high" for males and is well above average for the U.S. male astronauts selected to date.

2 Nominal durations that individuals can maintain aerobic power levels as percent of their maximums. Durations greater than one hour normally require 10 minutes rest per hour, greater than 4 hours a "lunch (rest) break" of approximately one hour.

3 Upper values assume a person of 54 kg (120 lb) and lower values one of 74 kg (163 lb).

4 Rate of caloric expenditure (kcal/hr) that can be maintained as tolerable for the corresponding duration.
(NOTE: EVA activities have averaged about 230 kcal/hr)

MSIS-208

Figure 4.10.2-1. Aerobic Endurance: Duration and Workload

122 W rather than the 581 W that would result from 100% efficiency. Most of the wasted energy results in metabolic heat that must be dissipated by the person.

b. Optimum Workloads - It is important to try to maintain work loads that are close to optimum for each individual. This is especially true on longer duration flights. Optimum work loads mean not only to avoid overloading the individual but also not to underload them. Both of these conditions have been shown to lead to decreased performance.

c. Biomedical Changes - Biomedical changes, such as diminished musculoskeletal strength and reduced cardiac activity, can adversely affect work capacity. Inflight decrements in exercise capacity approaching 10% have been observed in some astronauts. These effects are likely to be more severe on longer missions and should be controlled to the extent possible by inflight countermeasures such as exercise and diet.

d. Workload Prediction - It should be noted that a preponderance of evidence from previous flight experience implies several mechanisms which contribute to the difficulty of predicting workloads and task times during missions. These mechanisms include:

1. Effects of Space Adaptation Syndrome. These tend to increase task times due to the tendency for affected crewmembers to limit head motions. The effects are particularly evident during activation phases involving unstowage and frequent movements within the spacecraft, and are less evident with fully adapted crewmembers after the first few days in orbit.

2. Effects of Inappropriate Workstation Design - As noted in paragraph 4.9.2.d., workstation design can either support or confound task performance microgravity, with task difficulties ranging from "slightly easier" to "significantly more difficult" than the same task performed in one-g, depending on the success of the workstation design.

3. Proficiency Loss - Depending on the criticality of a task and its occurrence within the mission timeline, the length of time since a particular task was last performed in a training exercise may be significantly greater than the time between training sessions leading up to launch.

4. Adaptation to Microgravity Operations - This is a steep but significant "learning curve" associated with living and working in microgravity which often results in greatly decreased task times for second and subsequent performances of similar tasks as compared with the initial performance.

These mechanisms act independently and additively to increase task times, particularly during early portions of a mission. Designers and mission planners should anticipate these changes and should allow for task time increments of from 25% to 100% compared with one-g experience.

e. Task Complexity and Fatigue - Simple tasks can be performed effectively at much higher levels of fatigue than more complex tasks. Thus, in designing the daily schedules, it would be beneficial to place the complex tasks during periods of least fatigue.

4.11 Effects of Deconditioning
{A}

4.11.1 Introduction
{A}

4.11.2 Effects of Deconditioning Design Considerations
{A}

4.11.3 Effects of Deconditioning Design Requirements
{A}

Figure 4.11.3-1 presents design requirements and constraints for accommodating deconditioned crewmembers. In establishing these requirements, different levels of conservatism were applied to normal, and to backup/contingency activities. Activities normally required for safe return must assure success for highly deconditioned crews. Activities associated with off-nominal, low probability situations are based on more optimistic estimates of crew capability. In applying these requirements, the following must be observed:

a. Crew activities and implementation methods listed are not presented as requirements, but as a catalog of candidates for which the crew may be used if the associated requirements and constraints are met. If activities or implementation methods not listed herein are intended, they must be submitted to the emergency vehicle Project Office for approval and subsequent incorporation into this document.

b. For design purposes, deconditioning effects are assumed significant only during reentry and subsequent mission phases. For operations prior to entry interface (0.2g), other sections of this document are to be applied without derating for deconditioning.

c. All crewmembers will remain in their couches or seats appropriately restrained, throughout reentry and landing. After landing, the crew will not be required to leave their couches or seats or release their restraints until the vehicle is upright. For nominal mission, post landing activities must not require the crew to stand without assistance by ground personnel.

d. The crew shall not be required to perform any tasks during transient environments associated with parachute opening or disreefing, landing retrorocket firing, or landing impact.

e. "Not accommodated" as used in Figure 4.11.3-1 specifies that the crew shall not be required to perform the activity. This does not necessarily imply that the crew is not able to perform the activity.

f. Post Landing items 10 thru 14 are considered off-nominal/non-routine activities,.

Potential Crew Activity/Implementation	Design Requirements/Constraints	
	Environment	
	.2 < gx < 2	2 < gx < 4
1. Monitor displays: – Alpha–numeric – Graphical – Analog – Discrete	a. Displays must be within eye movement limits of Fig. 9.2.4.2.2-2 with lateral head movement of +/-30 and viewing distance limits of 9.2.4.2.2 a. b. Must not require lifting the head.	a. Displays must be within eye movement limits of Fig. 9.2.4.2.2-2 with lateral head movement of +/-30 and viewing distance limits of 9.2.4.2.2 a. b. Must not require lifting the head.
2. Read checklist data: a. Computer screen b. Hard copy	a. See 1. a, 1.b b. Hard copy must be within visibility limits of 2.a and reach envelope of 3.3.3.3.1 a.	a. See 1. a, 1.b b. Hard copy must be within visibility limits of 2.a and reach envelope of 3.3.3.3.1 a.
3. Actuate discrete controls: – Toggle – Pushbutton – Keyboard – Rotary	a. Controls must be within visibility limits of 1.a or meet the blind operation requirements specified in 9.3.3.1 g and within reah envelope of 3.3.3.3.1 a. b. Keystroke requirements should be minimized.	a. Controls must be within visibility limits of 1.a or meet the blind operation requirements specified in 9.3.3.1 g and within reah envelope of 3.3.3.3.1 a. b. Keystroke requirements should be minimized.
4. Actuate analog controls: a. Rotary b. Linear	a. See 3.a b. Specific applications must be approved.	a. Specific applications must be approved. b. Specific applications must be approved.
5. Communicate with Mission Control & SAR: a. Vox b. PTT	a. No constraints. b. See 3.a.	a. No constraints. b. See 3.a.
6. Monitor Physical cues: a. Vehicle motion b. Aural (alarms) c. Aural (equipment operation) d. Out the window visual	a. Not accommodated. b. Aural alarms must meet the requirements specified in 9.4.4. c. Specific applications must be approved. d. Specific applications must be approved.	a. Not accommodated. b. Aural alarms must meet the requirements specified in 9.4.4. c. Not accommodated. d. Not accommodated.
7. Monitor patient: a. Direct visual observation of patient b. Monitor medical support equipment	a. Attendant must be able to directly view the full side view of the patient from the waist up within the head and eye movement specified in 9.2.4.2.2c b. The medical support equip. must be visible within the field of view specified in 9.2.4.2.2c	a. Attendant must be able to directly view the full side view of the patient from the waist up within the head and eye movement specified in 9.2.4.2.2c. b. Not accommodated.

Figure 4.11.3-1 Capabilities of a Deconditioned Crew (continued) Re-entry Through Final Descent

MSIS 460A
Rev. B

Potential Crew Activity/ Implementation	Design Requirements/Constraints Environment	
	1g Upright	1g Inverted
1. Monitor displays: - Alpha-numeric - Graphical - Analog - Discrete	a. Displays must be within eye and head movement limits of 9.2.4.2.2.c., and viewing distance limits of 9.2.4.2.2.a. Rapid head movement should not be required.	a. Displays must be within eye and head movement limits of 9.2.4.2.2.c, and viewing distance limits of 9.2.4.2.2.a. Rapid head movement should not be required.
2. Read checklist data: a. Computer screen b. Hard copy	a. See 1.a. b. Hardcopy must be within visibility limits of 2.a, and reach envelope of 3.3.3.3.1.a.	a. See 1.a. b. Hardcopy must be within visibility limits of 2.a, and reach envelope of 3.3.3.3.1.a.
3. Actuate discrete controls: - Toggle - Push button - Keyboard - Rotary	a. Controls must be within visibility limits of 1.a or meet the blind operation actuation requirements of 9.3.3.1.g. and within reach envelope of 3.3.3.3.1.a.	a. Controls must be within visibility limits of 1.b. or meet the blind operation actuation requirements of 9.3.3.1.g. and within reach envelope of 3.3.3.3.1.a.
4. Actuate analog controls: a. Rotary b. Linear	a. See 3.a. b. Specific applications must be approved.	a. See 3.a. b. Specific applications must be approved.
5. Communicate with Mission Control & SAR: a. Vox b. PTT	a. No constraint. b. No constraint.	a. Crew must be restrained in couch or seat. b. Crew must be restrained in couch or seat.
6. Monitor physical cues: a. Vehicle motion b. Aural (alarms) c. Aural (equipment operation) d. Out the window (visual)	a. Only inverted or upright attitude determination is accommodated. b. Aural alarms must meet the requirements specified in 9.4.4. Crew must be able to discern cues from couch or seat. c. Specific applications must be approved. d. Specific applications must be approved.	a. Only inverted or upright attitude determination is accommodated b. Aural alarms must meet the requirements specified in 9.4.4. Crew must be able to discern cues from couch or seat. c. Specific applications must be approved. d. Specific applications must be approved. Crew must be able to discern cues from couch or seat.
7. Monitor patient a. Direct visual observation of patient. b. Monitor medical support equipment.	a. No constraint. b. No constraint.	a. Attendant must be able to directly view the full side view of the patient from the waist up within the head and eye movement specified in 9.2.4.2.2.c. b. Medical support equipment must be visible within the field of view specified in 9.2.4.2.2.c.

MSIS 460B
Rev. B

Figure 4.11.3-1 Capabilities of a Deconditioned Crew (continued) Post-Landing

Potential Crew Activity/ Implementation	Design Requirements/Constraints	
	Environment	
	1g Upright	1g Inverted
8. Adjust medical equipment and provide medical assistance to patient.	a. No constraint. b. Attendant may exit couch or seat to provide assistance. The crewmember must not be required to stand.	Not accommodated.
9. Assist patient in eating, drinking and personal hygiene.	a. No constraint. b. Attendant may exit couch or seat to provide manual assistance. The crewmember must not be required to stand.	Not accommodated.
10. Operate auxiliary equipment, retrieve supplies, and perform personal hygiene functions.	a. Crew may exit couch or seat to perform activities. b. Unrestrained mass should be less than 12 lbs. c. Control actuation must meet the requirements specified in 9.3.3. d. Crew strength capabilities should be as specified in 4.9.3. e. Contingency operations which require the crew member to stand must be approved.	Not accommodated.
11. Reconfigure couches, seats or panels after landing. Operate lock/ release mechanism, Raise or lower seat pan or equipment.	a. Crew may exit couch or seat to perform activity. b. Unrestrained mass should be less than: - Dynamic (water) envir. - 12 lbs. - Static (land) envir. - 20 lbs. c. Restrained loads should not exceed capabilities specified in 4.9.3. d. Contingency operations which require the crew member to stand must be approved.	Not accommodated

MSIS460C
Rev. B

Figure 4.11.3-1 Capabilities of a Deconditioned Crew (continued) Post-Landing

Potential Crew Activity/ Implementation	Design Requirements/Constraints	
	Environment	
	1g Upright	1g Inverted
12. Open hatch / Operate latch mechanism	a. Crew may exit couch or seat to perform activity b. No unrestrained mass. c. Restrained loads should not exceed crew strength capabilities specified in 4.9.3. d. Contingency operations which require the crew member to stand must be approved.	Not accommodated.
13. Egress without outside assistance	a. Crew may exit couch or seat to perform activity. b. Crew is assumed to have the physical capability and strength of a normally conditioned crew as stated in 4.9.3.	Not accommodated.
14. Deploy survival equipment	a. Single crew member should not be required to lift more than 20 lbs. overhead. b. Mass of single package of survival equipment should not exceed 50 lbs.	Not accommodated.

Figure 4.11.3-1 Capabilities of a Deconditioned Crew Post-Landing

MSIS 460D
Rev. B

Table of Contents

		Page
5.0	**NATURAL AND INDUCED ENVIRONMENTS**	**5-1**
5.1	**ATMOSPHERE**	**5-1**
5.1.1	Introduction	5-1
5.1.2	Atmosphere Design Considerations	5-1
5.1.2.1	Safe Atmospheres Design Considerations	5-3
5.1.2.1.1	Gas Composition and Pressure Design Considerations	5-4
5.1.2.1.2	Gas Pressure Design Considerations	5-5
5.1.2.1.3	Mission Related Design Considerations	5-5
5.1.2.1.4	Human Response to the Diluent Gas Environment Design Considerations	5-7
5.1.2.1.4.1	Metabolic Factors Design Considerations	5-7
5.1.2.1.4.2	Thermal Factors Design Considerations	5-8
5.1.2.1.4.3	Vocal Factors Design Considerations	5-8
5.1.2.2	Dangers Associated with Unsafe Atmospheres Design Considerations	5-9
5.1.2.2.1	Adaptive Physiological Responses Design Considerations	5-9
5.1.2.2.1.1	Hypoxia Design Considerations	5-9
5.1.2.2.1.2	Night Vision Abnormalities Design Considerations	5-9
5.1.2.2.1.3	Oxygen Toxicity (Hyperoxia) Design Considerations	5-9
5.1.2.2.1.4	Chronic CO_2 Toxicity Design Considerations	5-9
5.1.2.2.1.5	Acute CO_2 Toxicity Design Considerations	5-14
5.1.2.2.1.6	CO_2 Withdrawal Design Considerations	5-14
5.1.2.2.1.7	Dysbarism Sickness Design Considerations	5-16

5.1.2.2.1.7.1 Evolved Gas Dysbarism Design Considerations 5-16

5.1.2.2.1.7.2 Trapped Gas Dysbarism Design Considerations 5-18

5.1.2.2.1.7.3 Toxic Gaseous Contaminants Design Considerations 5-19

5.1.2.3 Atmosphere Monitoring Design Considerations 5-21

5.1.2.3.1 Atmosphere Toxicological Monitoring Design Considerations . . 5-21

5.1.2.3.2 Atmosphere Microbiological Monitoring Design Consideration . . 5-21

5.1.2.3.3 Baro-Thermal Monitoring Design Considerations 5-21

5.1.3 Long-Term Mission Atmosphere Design Requirements 5-22

5.1.3.1 Atmosphere Composition and PressureDesign Requirements . . 5-22

5.1.3.2 Atmosphere Monitoring Design Requirements 5-24

5.1.3.3 Atmosphere Toxicological Monitoring and Design Considerations 5-24

5.1.3.4 Atmosphere Microbiological Monitoring & Control Design Considerations 5-24

5.1.3.4.1 Microbial Decontamination Design Requirements 5-24

5.1.3.4.2 Verification Design Requirements 5-25

5.1.3.4.3 Cross Contamination Design Requirements 5-25

5.1.3.5 Baro-Thermal Monitoring Design Requirements 5-25

5.2 MICROGRAVITY 5-25

5.2.1 Introduction 5-25

5.2.2 Microgravity and Its Counterparts Design Considerations 5-26

5.2.2.1 Physiological Effects of Microgravity 5-26

5.2.2.2 Sleeping, Eating, and Mobility Changes in Microgravity 5-27

5.2.3 Microgravity Design Requirements 5-28

5.3	**ACCELERATION**	5-28
5.3.1	Introduction	5-28
5.3.2	Acceleration Design Considerations	5-31
5.3.2.1	Acceleration Environments	5-31
5.3.2.1.1	Linear Acceleration Environments	5-31
5.3.2.1.2	Rotational Acceleration Environments	5-31
5.3.2.1.3	Impact Acceleration Environments	5-31
5.3.2.2	Human Responses to Linear Acceleration	5-32
5.3.2.2.1	Factors Affecting Human Acceleration Tolerance	5-32
5.3.2.2.2	Subjective Effects of Linear Accelerations	5-32
5.3.2.2.3	Specific Effects of Linear Accelerations	5-34
5.3.2.3	Human Responses to Rotational Accelerations	5-35
5.3.2.4	Human Responses to Impact Accelerations	5-36
5.3.3	Acceleration Design Requirements	5-37
5.3.3.1	Linear Acceleration Design Requirements	5-37
5.3.3.1.1	Entry Acceleration Design Requirements	5-37
5.3.3.2	Rotational Acceleration Design Requirements	5-37
5.3.3.3	Impact Acceleration Design Requirements	5-39
5.4	**ACOUSTICS**	**5-41**
5.4.1	Introduction	5-41
5.4.2	Acoustics Design Considerations	5-41
5.4.2.1	Acoustic Environments Design Considerations	5-41
5.4.2.1.1	Launch Phase Acoustic Environment	5-43

5.4.2.1.2 On-Orbit Phase Acoustic Environment 5-43

5.4.2.1.3 Entry Phase Acoustic Environment 5-45

5.4.2.2 Propagation of Noise Design Considerations 5-45

5.4.2.3 Human Responses to Noise Design Considerations 5-45

5.4.2.3.1 Physiological Effects of Noise 5-45

5.4.2.3.2 Performance Effects of Noise 5-47

5.4.2.3.3 Annoyance Effects of Noise 5-50

5.4.2.4 Noise Exposure Limits Considerations 5-50

5.4.2.4.1 Hearing Conservation Criteria Considerations 5-50

5.4.2.4.1.1 Long-Term Hearing Conservation Criteria Considerations 5-50

5.4.2.4.1.1.1 Wide-Band, Long-Term Hearing Conservation Considerations . . 5-51

5.4.2.4.1.1.2 Narrow-Band, Long-Term Hearing Conservation Considerations . . 5-51

5.4.2.4.1.2 Short-Term Hearing Conservation Criteria Considerations 5-51

5.4.2.4.2 Voice Communications Criteria Considerations 5-51

5.4.2.4.2.1 Direct Voice Communications Criteria Considerations 5-51

5.4.2.4.2.2 Indirect Voice Communications Criteria Considerations 5-52

5.4.2.4.3 Annoyance Criteria Considerations 5-52

5.4.2.4.3.1 Long-Term Annoyance Noise Criteria Considerations 5-53

5.4.2.4.3.2 Short-Term Annoyance Noise Criteria Considerations 5-53

5.4.3 Acoustics Design Requirements 5-53

5.4.3.1 General Acoustic Design Requirements 5-53

5.4.3.2 Noise Exposure Requirements 5-53

5.4.3.2.1 Hearing Conservation Noise Exposure Requirements 5-54

5.4.3.2.1.1 Wide-Band, Long-Term Hearing Conservation Noise Exposure Requirements 5-54

5.4.3.2.1.2 Narrow-Band, Long-Term Hearing Conservation Noise Exposure Requirements 5-54

5.4.3.2.1.3 Impulse Hearing Conservation Noise Exposure Requirements . . 5-54

5.4.3.2.1.4 Infrasonic, Long-Term Annoyance Noise Exposure Requirements . 5-54

5.4.3.2.1.5 Ultrasonic, Long-Term Annoyance Noise Exposure Requirements . 5-54

5.4.3.2.2 Voice Communication Noise Exposure Requirements 5-55

5.4.3.2.2.1 Direct Voice Communications Noise Exposure Requirements . . 5-55

5.4.3.2.2.2 Indirect Voice Communications Noise Exposure Requirements . . 5-57

5.4.3.2.3 Annoyance Noise Exposure Requirements 5-57

5.4.3.2.3.1 Wide-Band, Long-Term Annoyance Noise Exposure Requirements . 5-57

5.4.3.2.3.2 Narrow-Band Annoyance Noise Exposure Requirements 5-58

5.4.3.2.3.3 Wide-Band, Short-Term Annoyance Noise Exposure Requirements 5-59

5.4.3.2.3.4 Impulse Annoyance Noise Exposure Requirements 5-59

5.4.3.2.4 Measurement of Noise Levels 5-59

5.4.3.2.5 Noise Reduction For Equipment Upgrades 5-59

5.4.4 Example Acoustics Design Solutions 5-59

5.4.4.1 Noise Control at the Source 5-59

5.4.4.2 Control of Noise Path Transmission 5-59

5.4.4.3 Hearing Protection 5-61

5.5 VIBRATION 5-61

5.5.1 Introduction 5-61

5.5.2 Vibration Design Considerations 5-61

5.5.2.1 Vibration Environments Design Considerations 5-62

5.5.2.1.1 Launch Phase Vibration Environment 5-62

5.5.2.1.2 On-Orbit Phase Vibration Environment 5-62

5.5.2.1.3 Entry Phase Vibration Environment 5-62

5.5.2.2 Vibration Propagation Design Considerations 5-63

5.5.2.3 Human Responses to Vibration Design Considerations 5-63

5.5.2.3.1 Physiological Effects of Vibration 5-63

5.5.2.3.2 Performance Effects of Vibration 5-65

5.5.2.3.3 Discomfort /Annoyance Effects of Vibration 5-65

5.5.2.4 Vibration Exposure Limits Design Considerations 5-67

5.5.2.4.1 Vibration Direction Criteria Design Considerations 5-67

5.5.2.4.2 Vibration Exposure Criteria Design Considerations (0.1 to 1Hz) . . 5-67

5.5.2.4.3 Vibration Exposure Criteria Design Considerations (1 to 80 Hz) . . 5-67

5.5.2.4.4 Vibration Duration Criteria Design Considerations 5-69

5.5.3 Vibration Design Requirements 5-70

5.5.3.1 General Vibration Design Requirements 5-70

5.5.3.2 Vibration Exposure (0.1 to 1 Hz) Design Requirements 5-70

5.5.3.2.1 Severe Discomfort Boundary 5-70

5.5.3.2.2 Decreased Proficiency Boundary 5-70

5.5.3.2.3 Reduced Comfort Boundary 5-72

5.5.3.2.4 Vibration Duration 5-72

5.5.3.2.5 Vibration Data From 0.63 to 1.0 Hz 5-72

5.5.3.3 Vibration Exposure (1 to 80 Hz) Design Requirements 5-72

5.5.3.3.1 Fatigue-Decreased Proficiency Boundary 5-72

5.5.3.3.2 Vibration Exposure Limit 5-75

5.5.3.3.3 Reduced Comfort Boundary 5-75

5.5.3.3.4 Vibration Duration 5-75

5.5.4 Example Vibration Design Solutions 5-75

5.5.4.1 Vibration Control at the Source 5-80

5.5.4.2 Control of Vibration - Path Transmission 5-82

5.5.4.3 Vibration Protection 5-82

5.6 (THIS PARAGRAPH WAS NOT USED) 5-83

5.7 RADIATION 5-83

5.7.1 Introduction 5-83

5.7.2 Ionizing Radiation 5-83

5.7.2.1 Ionizing Radiation Design Considerations 5-83

5.7.2.1.1 Types of Ionizing Radiation 5-83

5.7.2.1.2 Sources of Ionizing Radiation 5-84

5.7.2.1.2.1 Trapped Radiation Belts 5-85

5.7.2.1.2.2 Galactic Cosmic Radiation 5-88

5.7.2.1.2.3 Solar Cosmic Rays 5-89

5.7.2.1.2.4 Onboard Radiation Sources 5-94

5.7.2.1.3 Human Responses to Ionizing Radiation 5-94

5.7.2.1.3.1 Units of Measure Used to Describe Human Responses to IO 5-94

5.7.2.1.3.2 Late Effects of Ionizing Radiation 5-96

5.7.2.1.3.3 Acute Effects of Ionizing Radiation 5-97

5.7.2.1.3.3.1 Whole-Body Irradiation Effects 5-97

5.7.2.1.3.3.2 Gastrointestinal or Precursor Effects 5-100

5.7.2.1.3.3.3 Hematological Effects 5-102

5.7.2.1.3.3.4 Skin Tissue Effects 5-103

5.7.2.1.3.3.5 Reproductive Cell Effects 5-103

5.7.2.1.3.3.6 Performance Degradation Effects 5-105

5.7.2.1.3.4 Biological Effects of HZE Particles 5-105

5.7.2.1.4 Ionizing Radiation Protection Design Considerations 5-106

5.7.2.1.4.1 Mass Shielding 5-106

5.7.2.1.4.2 Electromagnetic Shielding 5-106

5.7.2.1.4.3 Chemical Protectors 5-107

5.7.2.1.4.4 Avoidance of High Radiation Fluxes 5-107

5.7.2.1.4.5 Radiation Fields in Polar and Geosynchronous Orbit 5-107

5.7.2.1.4.6 Radiation Monitoring 5-108

5.7.2.1.5 Low Earth Orbit Environment 5-108

5.7.2.2 Ionizing Radiation Design Requirements 5-108

5.7.2.2.1 Ionizing Radiation Exposure Limits 5-108

5.7.2.2.2 Ionizing Radiation Protection Design Requirements 5-110

5.7.2.2.3 Ionizing Radiation Monitoring and Dosimetry Design Requirements 5-112

5.7.2.2.4 Ionizing Radiation Personnel Protection Design Requirements . . 5-112

5.7.3.1 Non-Ionizing Radiation 5-112

5.7.3.1 Non-Ionizing Radiation Design Considerations 5-112

5.7.3.1.1 Types of Non-Ionizing Radiation 5-112

5.7.3.1.2 Sources of Non-Ionizing Radiation 5-114

5.7.3.1.3 Human Responses to Non-Ionizing Radiation 5-116

5.7.3.1.4 Non-Ionizing Radiation Protection Design Considerations 5-120

5.7.3.2 Non-Ionizing Radiation Design Requirements 5-121

5.7.3.2.1 Non-Ionizing Radiation Exposure Limits 5-121

5.7.3.2.2 Non-Ionizing Radiation Protection Design Requirements 5-126

5.8 THERMAL ENVIRONMENT 5-133

5.8.1 Introduction 5-133

5.8.2 Thermal Environment Design Considerations 5-133

5.8.2.1 Mission Thermal Environment Design Considerations 5-134

5.8.2.2 Human Responses to Thermal Environments Design Considerations 5-141

5.8.2.2.1 Modes of Heat Exchange Design Considerations 5-141

5.8.2.2.2 Thermoregulation by the Body Design Considerations 5-143

5.8.2.2.2.1 Microgravity Effects on the Thermal Environment 5-144

5.8.2.2.3 Human Performance in Heat Design Considerations 5-144

5.8.2.2.4 Human Performance in Cold Design Considerations 5-145

5.8.2.2.5 Special Ventilation & Metabolic Heat Removal Design Considerations 5-148

5.8.3 Thermal Environment Design Requirements 5-148

5.8.3.1 Temperature, Humidity, and Ventilation Design Requirements . . 5-148

5.8.3.2 Thermal Monitoring and Control Design Requirements 5-153

5.9 COMBINED ENVIRONMENTAL EFFECTS 5-153

5.9.1 Introduction 5-153

5.9.2 Combined Environmental Effects Design Considerations 5-153

5.0 NATURAL AND INDUCED ENVIRONMENTS
{A}

5.1 ATMOSPHERE
{A}

5.1.1 Introduction
{A}

This section concerns the appropriate design of spacecraft cabin atmospheres. The atmospheric design considerations subsection includes data on safe atmospheric compositions and pressures, human physiological response to these atmospheric environments, and the effects on humans of atmospheres with undesirable, or unsafe properties. The atmosphere design requirements subsection includes general design goals, atmospheric composition and pressure limits, monitoring and control of the cabin atmosphere, and limits on contaminants and toxins.

Cabin ambient conditions of temperature, humidity, and airflow are covered in Paragraph 5.8, Thermal Environment. EVA pressure suit atmosphere is covered in Paragraph 14.2.2.9, EVA Suit Pressure Design Considerations, and Paragraph 14.2.3.9, EVA Suit Pressure Design Requirements.

5.1.2 Atmosphere Design Considerations
{A}

Crewmembers in the system must be provided with an environment to enable them to survive and function as a system component in space. An artificial atmosphere of suitable composition and pressure is the most immediate need. It supplies the oxygen their blood must absorb and the pressure their body fluids require.

Humans are accustomed to breathing an atmosphere that contains 21% oxygen by volume at sea-level. Figure 5.1.2-1 shows the composition of a sea-level-equivalent atmosphere. Oxygen partial pressure must be maintained above 152 mm Hg (3 psia) for normal functioning of average crewmembers. A crewmember unacclimatized to high altitude cannot survive for extended periods at total pressures lower than 417 mm Hg (8 psia). By breathing pure oxygen, they can survive at a total pressure of about 152 mm Hg (3 psia). At a total pressure of 760 mm Hg (14.7 psia) the oxygen supply is similarly inadequate when the concentration of oxygen is below about 11%. Too little oxygen (hypoxia) induces sleepiness, headache, the inability to perform simple tasks, and loss of consciousness. Too much oxygen (hyperoxia) can also be harmful. Prolonged breathing of pure oxygen at sea level pressure (and perhaps even at lower pressures) can eventually produce inflammation of the lungs, respiratory disturbances, various heart symptoms, blindness, and loss of consciousness.

Figure 5.1.2-2 shows human performance limits versus total pressure and oxygen concentration. Maximum range in total pressure varies from 760 mm Hg (14.7 psia) with an N2-02 mix, to approximately 190 mm Hg (3.6 psia) 100% 02. The lower pressure limits are determined primarily by the requirements for maintaining alveolar oxygen levels. At 190 mm Hg (3.6 psia) total pressure in a 100% oxygen atmosphere, the O2 partial pressure is near normoxic or 103 mm HgPO2 (2.0 psia) in the alveoli (the remainder of the lung being filled with CO2 and water vapor). If pressures less than 190 mm Hg (3.6 psia) are considered, the crew will need pressure suits and 100% oxygen under pressure. Using pressures of less than 760 mm Hg (14.7 psia) may provide protection from bends in the event of decompression (both accidental and intentional) because partial pressure of N_2 (pN_2) decreases in proportion to barometric pressure (pB). This aspect of atmosphere selection assumes considerable importance if a crewmember must leave the vehicle and perform tasks in space.

Parameter	Standard Sea-Level Atmosphere values		
	kPa	psia	mmHg
Total pressure	101.36	14.70	760.0
Oxygen partial pressure	21.37	3.04	151.3
Nitrogen partial pressure	78.60	11.44	591.7
Water vapor partial pressure	1.38	0.2	10.7
CO_2 partial pressure	.04	0.0058	0.3

Reference: 198, Page 27

Note: Water vapor partial pressure at 74 deg. F and 50% relative humidity

MSIS-55 REV.A

Figure 5.1.2-1. Standard Sea-Level Atmosphere

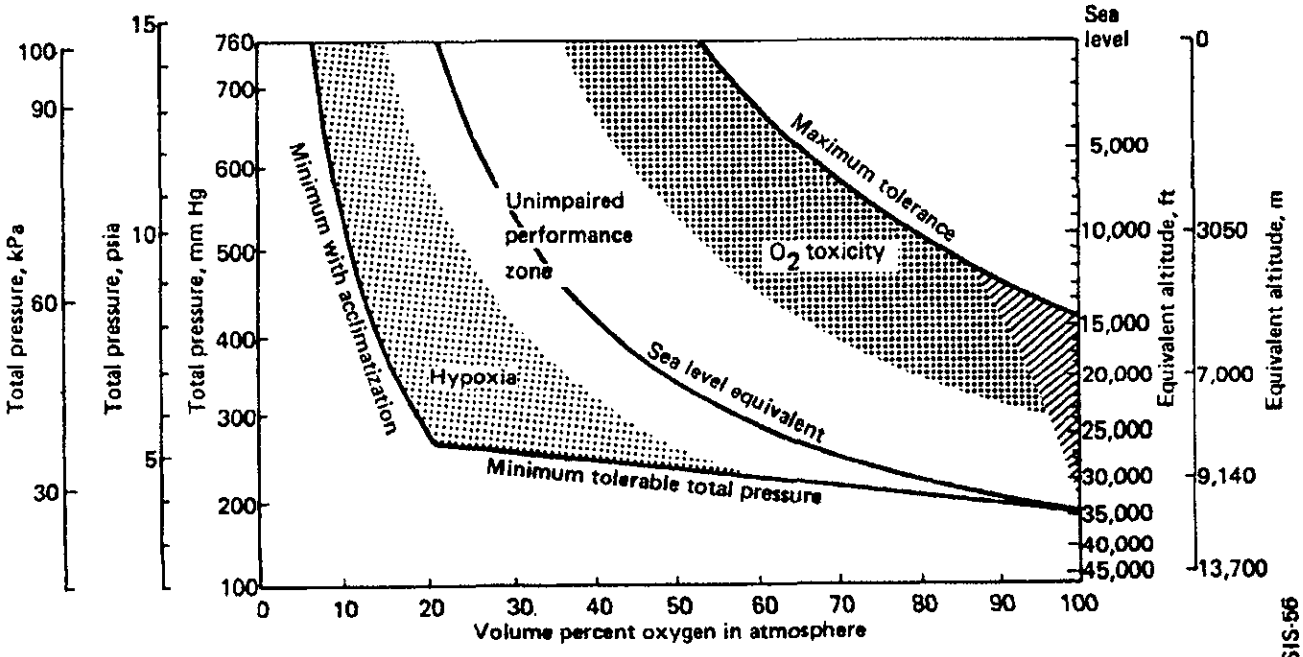

Reference: 6, Figure 3.9, page 37

MSIS-56

Figure 5.1.2-2. Relationship Between Percentage of Oxygen in Atmosphere of Space Vehicle and Total Pressure of That Atmosphere

Considering crew needs only, space cabin pressure is sufficient in the range between 190 and 380 mm Hg (3.75 - 7.3 psia). In this range, crewmembers need not wear protective equipment, and as long as the amount of oxygen in the vehicle cabin provides an alveolar partial pressure of O2 (pO2) of at least 103 mm Hg (1.9 psia), the blood will have an oxygen level equivalent to that at sea level.

The use of low ambient pressure and 100% oxygen at the above pressure is attractive to the designer because it saves weight, simplifies engineering and monitoring, and reduces atmospheric gas leak rates. However, there is considerable fire hazard involved in using 100% oxygen in the pressure range of 190 to 380 mm Hg (3.75 - 7.3 psia). At 190 mm Hg (3.75 psia), 100% oxygen is essential to maintain the required alveolar PO_2. At 380 mm Hg (7.3 psia), the oxygen can be diluted with an inert gas, such as nitrogen or helium, to about 50% of the total pressure, the inert gas acting as a retardant in case of fire. The burning time is approximately doubled by going from 100% oxygen at 190 mm Hg (2.75 psia) to a nitrogen-diluted atmosphere at 380 mm Hg (7.3 psia).

(Refer to Paragraph 6.6, Fire Hazards, for more details on fire protection and control.)

The current design approach for a manned spacecraft atmosphere specifies a pressure of 760 mm Hg (14.7 psia). This environment offers an advantage in that chemical or biological experiments performed in the cabin will not have the added complication of dealing with a nonstandard pressure or composition.

The following paragraphs give additional details on the atmospheric design consideration factors previously discussed.

5.1.2.1 Safe Atmospheres Design Considerations

{A}

Humans can survive in a wide range of atmospheric compositions and pressures. Atmospheres deemed sufficient for human survival are constrained by the following considerations:

a. There must be sufficient total pressure to prevent the vaporization of body fluids.

b. There must be free oxygen at sufficient partial pressure for adequate respiration.

c. Oxygen partial pressure must not be so great as to induce oxygen toxicity.

d. For long durations (in excess of two weeks) some physiologically inert gas must be provided to prevent atelactasis.

e. All other atmospheric constituents must be physiologically inert or of low enough concentration to preclude toxic effects.

f. The breathing atmosphere composition should have minimal flame/explosive hazard.

More restrictive limits may be applied to atmospheric parameters to ensure crew health. Crew comfort and efficiency may be enhanced by imposing yet tighter constraints.

Paragraphs 5.1.2.1.1, Gas Composition and Pressure Design Considerations, and 5.1.2.1.4, Human Responses to the Diluent Gas Environment Design Considerations, address the selection of atmospheric parameters and discuss crew health and comfort impacts.

5.1.2.1.1 Gas Composition and Pressure Design Considerations

{A}

Figure 5.1.2.1.1-1 shows optimum sea-level atmospheric parameters. Although an Earth-like atmosphere is not the only possibility, it is useful to consider such an atmosphere as a baseline.

The most basic requirements applicable to any spacecraft cabin atmosphere are that it provide:

a. Free oxygen of a suitable partial pressure for metabolic use.

b. A cabin absolute pressure sufficient to prevent vaporization of body fluids (ebullism), which occurs at approximately 45 mm Hg (0.9 psia) at 37o C (95o F).

Earth's atmosphere provides a physiologically inert gas, nitrogen, which comprises 78% of Earth's air by volume. Best candidate atmospheres will contain one or more of the. following physiologically inert diluent gases: nitrogen, helium, neon, argon, krypton, xenon, or hydrogen. The diluent gas can serve several functions:

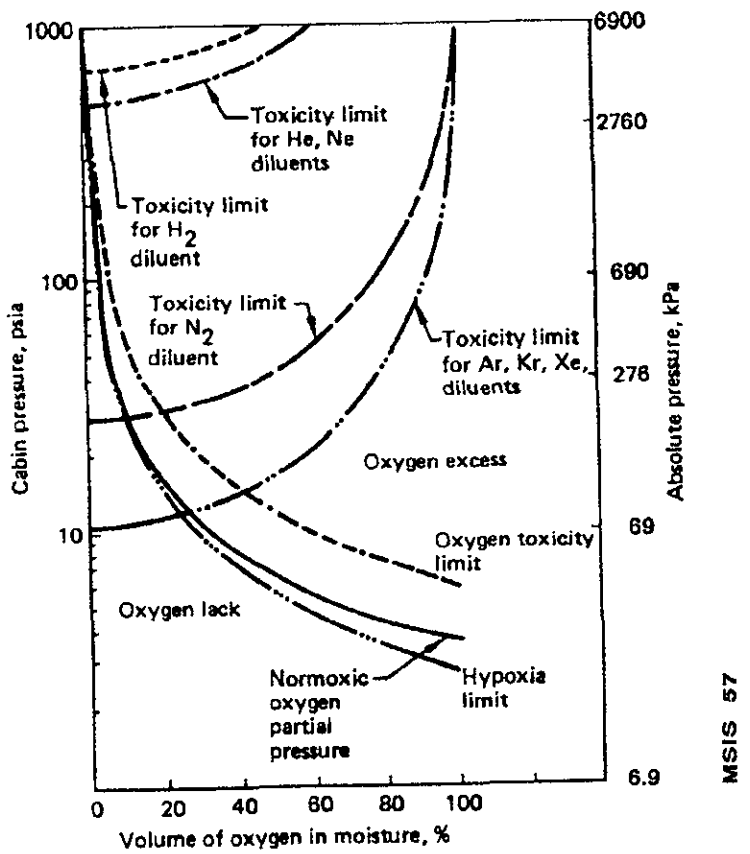

Reference: 29, pages 2, 42, 55
111, page 863
198, page 27
264, Table 11.2, paragraphs 11.1.1/4
268, page 5

Figure 5.1.2.1.1-1. Range of Permissable Cabin Atmosphere Absolute Pressure vs Oxygen Concentration

1. It can be used to increase cabin total pressure without necessarily increasing oxygen partial pressure - this is important in vehicles that operate in a high absolute pressure ambient, e.g., a diving bell or a hypothetical manned lander on Venus.

2. In the event of a closed pocket of gas occurring in the crewmember's body, collapse of the pocket may occur. This may occur in the middle ear if the middle ear is not periodically ventilated (ear clearing). It can also occur in small segments of the lungs during high stress, since the oxygen and carbon dioxide present in the pocket are absorbed rapidly. A diluent gas added to the mixture will be absorbed more slowly, and will help prevent such a collapse.

3. Experiments, particularly in life sciences, may be sensitive to atmospheric parameters. A choice of Earth normal atmosphere [i.e., 760 mm Hg (14.7 psia) and 79% nitrogen, 21% oxygen, plus minor constituents] would typically provide a better laboratory test environment than pure oxygen. Normal atmosphere would allow use of standard laboratory equipment.

4. Except for hydrogen, the diluent gas(es) in the cabin atmosphere will act as a suppressant in case of fire.

5.1.2.1.2 Gas Pressure Design Considerations

{A}

Figure 5.1.2.1.1-1 plots absolute cabin pressure as a function of percent oxygen in the mixture. Shown in the figure are:

a. Normoxic line which will typically represent the optimum pressure concentration combination.

b. Upper and lower pressure limits imposed by danger of oxygen toxicity and hypoxia, respectively.

c. Upper pressure limits imposed by danger of toxicity of various diluent gases.

Carbon dioxide will be present as a byproduct of respiration. Figure 5.1.2.1.2-1 plots alveolar partial pressure of CO_2 against alveolar partial pressure of O_2. Shown on the graph are relations between CO_2-O_2 composition and human performance response. The normal 36 mm Hg (0.7 psia) alveolar partial pressure corresponds to approximately 3 mm Hg (0.006 psia) CO_2 cabin partial pressure.

5.1.2.1.3 Mission Related Design Considerations

{A}

Various flight regimes may influence the choices a designer makes in selecting an atmosphere. Some of the possible considerations are:

a. Prelaunch - Contamination from ambient atmosphere during boarding may influence pressurization or depressurization schedule. Low pressure cabins may require oxygen prebreathe.

b. Launch - The possibility of oxygen atelectasis during high-g stress, with a 100% O2 atmosphere, suggests including a diluent gas in the mixture. The shallow breathing that may result from high-g loading may dictate a higher oxygen concentration or an increased ventilation rate.

c. Short Flights - Greater ranges of atmospheric parameters (e.g., CO_2 partial pressure and pure oxygen atmospheres) may be tolerated in short flights as the detrimental effects of these are time dependent.

d. Long Flights - For longer flights, tolerance to irritating or toxic substances are reduced, trace contaminants become more important, and crew comfort of greater concern.

e. Entry/Landing - Same as launch, plus consideration of ambient conditions if landing in extraterrestrial environment.

f. Post Landing - If on Earth, reintroducing ambient atmosphere on an appropriate schedule may be desirable while waiting for debarkation. If not on Earth, ambient conditions, EVA operations, experiments, etc., may influence atmosphere design.

g. Hyperbaric Treatment - The rate of pressurization during hyperbaric treatment should not result in a differential pressure across a crewmember's chest in excess of 80 mm Hg (1.5 psi), or in excess of 40 mm Hg (0.75 psi) for a period of longer than five seconds. Decompression scheduling and gas composition changes in the chamber depend on atmospheric composition. O_2 toxicity is the main concern in hyperbaric therapy regimes. See Reference 280 for specific protocols.

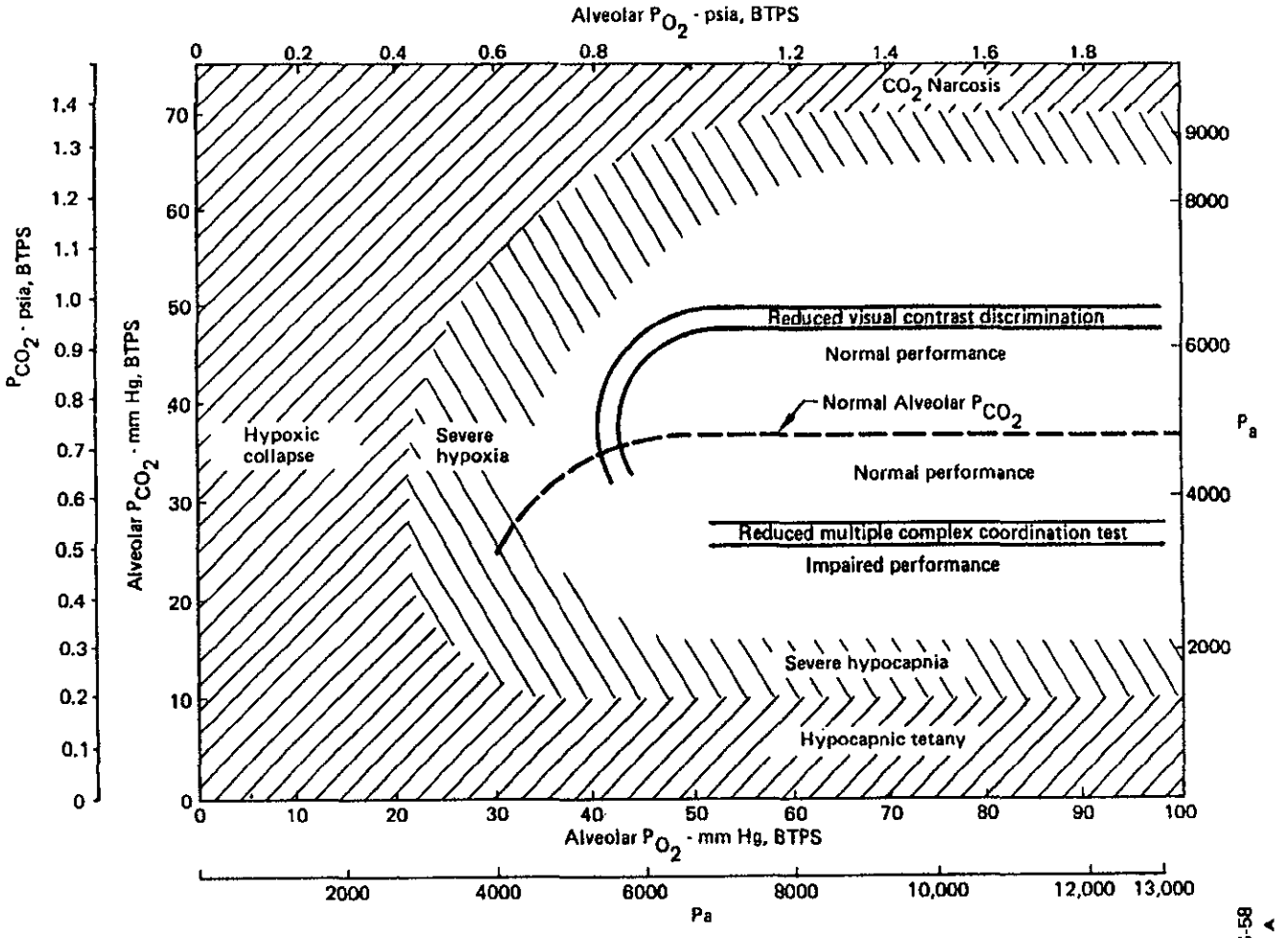

Reference: 29, pages 2, 42, 55
111, page 863
264, Table 11.2, paragraphs 11.1.1/4
268, page 5

Figure 5.1.2.1.2-1. Relationship of Alveolar O_2 and CO_2 Composition to Performance

5.1.2.1.4 Human Response to the Diluent Gas Environment Design Considerations

{A}

A choice of atmospheric composition that contains a diluent gas other than nitrogen may have associated side effects for a spacecraft crew. Paragraphs 5.1.2.1.4.1 through 5.1.2.1.4.3 discuss metabolic, thermal, and vocal factors that may impact crew performance.

Figure 5.1.2.1.4-1 lists some physical properties of selected inert gases.

5.1.2.1.4.1 Metabolic Factors Design Considerations

{A}

All gases considered for the role of diluent in an atmosphere must be physiologically inert, i.e., relatively little metabolic response to the diluent under normal conditions. At higher pressures, however, the diluent gases exhibit toxic effects. Figure 5.1.2.1.1-1 shows approximate upper pressure limits for use of various diluents. At pressures above these limits, the diluent can act as a depressant. Standard hyperbaric treatment protocols only require total pressures up to 4560 mm Hg (88.2 psia).

Element	Helium	Nitrogen	Neon	Argon	Krypton	Xenon
Symbol	He	N2	Ne	A	Kr	Xe
Atomic number	2	7	10	18	36	54
Molecular weight	4.00	28.00	20.18	39.94	83.80	131.3
Density at 101.3 kPa (1 atm) and 0 deg C (32 °F)						
Kg/m^3	0.1784	1.251	0.9004	1.784	3.708	5.851
(lb/ft^3)	(0.011)	(0.078)	(0.056)	(0.111)	(0.231)	(0.365)
Viscosity at 0 deg C (32° F) and 101.3 kPa (1 atm)						
Pascal-second	19.4×10^{-5}	17.5×10^{-5}	31.1×10^{-5}	22.2×10^{-5}	25×10^{-5}	22.6×10^{-5}
(Centipoise)	(0.194)	(0.175)	(0.311)	(0.222)	(0.250)	(0.226)
Thermal conductivity at 0 deg C, (32° F), 101.3 kPa (1 atm)						
Kcal/M.hr °C	0.1252	0.0209	0.0407	0.0145	0.0077	0.0045
(BTU/ft. hr. °F)	(0.0840)	(0.0140)	(0.0273)	(0.0097)	(0.0052)	(0.0030)
Bunsen solubility coefficients:						
In water at 38° C	0.0086	0.013	0.0097	0.026	0.045	0.085
In olive oil at 38 °C	0.015	0.061	0.019	0.14	0.43	1.7
In human fat at 37°C	?	0.062	0.020	?	0.041	1.6
Oil, water solubility ratio	1.74	4.69	1.95	5.38	9.56	20.0

Reference: 42, Table 2-1, Page 53

MSIS-59 REV. A

Figure 5.1.2.1.4-1. Physical Properties of Inert Gases

5.1.2.1.4.2 Thermal Factors Design Considerations

{A}

With the exception of helium, the diluent gases considered for use in cabin atmospheres do not present difficulties with thermal regulation significantly different from nitrogen.

The thermal conductivity of helium is six times that of nitrogen. For this reason, experience has shown that air temperatures must be maintained at least 2° to 3° C (4 to 5° F) higher than normal for subjects at rest.

Figure 5.1.2.1.4.2-1 shows thermal conductivity for several diluent gas atmospheres against diluent gas concentration.

(Refer to Paragraph 5.8, Thermal Environment, for more details on the atmospheric thermal environment.)

5.1.2.1.4.3 Vocal Factors Design Considerations

{A}

The low density of helium-oxygen mixtures induces an increase in the frequencies of the human voice. At high-percentage mixtures of helium, substantial problems with speech intelligibility may be encountered. In these circumstances, partial mixes with nitrogen or neon added to the heliox (helium-oxygen) mixture will be of benefit. Electronic processing has also been used to improve communication clarity.

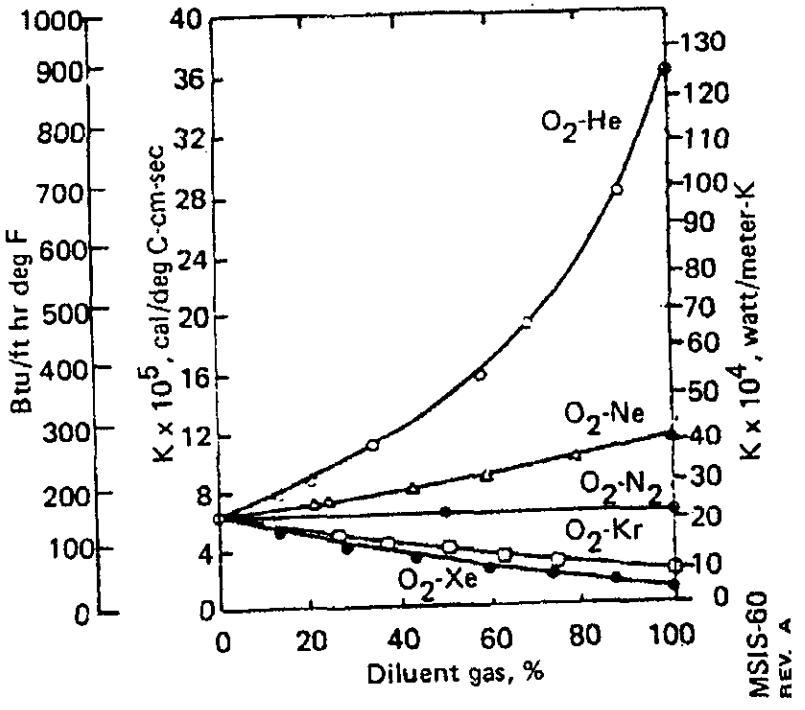

Reference: 92, Figure 2-18, page 58

Figure 5.1.2.1.4.2-1. Thermal Conductivity of Binary Gas Mixtures Containing O_2 at 30 deg C

5.1.2.2 Dangers Associated with Unsafe Atmospheres Design Considerations

{A}

Paragraphs 5.1.2.2.1 through 5.1.2.2.3 discuss the effects on humans of atmospheres that are unsuitable for crew health and comfort. Included are the effects of excess and insufficient O_2 and CO_2, insufficient and excess total pressure, and contaminants and toxicity.

5.1.2.2.1 Adaptive Physiological Responses Design Considerations

{A}

Adaptive physiological responses to unsafe atmospheres are considered to be those changes that take place in the body physiology to adapt to the outside stimulus, as opposed to nonadaptive responses, that indicate physical damage.

5.1.2.2.1.1 Hypoxia Design Considerations

{A}

The condition of insufficient oxygen to support normal physiological functioning is called hypoxia. The only oxygen stored by the body is found in the hemoglobin in the blood stream, and some amount in the myoglobin of red muscle tissues. Muscles can function temporarily without oxygen but build up toxic fatigue products that limit their activity.

The central nervous system, including the brain and eyes are particularly sensitive to oxygen deficiency, and cannot function without oxygen. Acute impairment of brain function occurs within 13 seconds whenever the alveolar oxygen tension drops below about 33 mm Hg (0.5 psia).

Man can acclimatize to hypoxia (adaptive response) at relatively low altitudes (pressures) but not above 5500 m (18000 ft) or 379 mm Hg (7.34 psia) and normal air composition.

Figure 5.1.2.2.1.1-1 shows atmospheric pressure/ composition combinations where hypoxia is likely to occur. Figure 5.1.2.2.1.1-2 lists physiological effects relative to lack of oxygen.

5.1.2.2.1.2 Night Vision Abnormalities Design Considerations

{A}

The visual functions of a human are particularly sensitive to hypoxia. The retina is the most O_2 sensitive tissue in the body. Figure 5.1.2.2.1.2-1 shows some thresholds of visual determination.

(Refer to Paragraph 4.2, Vision, for other vision design considerations and requirements).

5.1.2.2.1.3 Oxygen Toxicity (Hyperoxia) Design Considerations

{A}

For the purpose of this document, the condition of oxygen toxicity (hyperoxia) will be considered as associated with oxygen partial pressures between sea level normal, 160 mm Hg (3.1 psia), and the 310 mm Hg (6 psia) limit. Figure 5.1.2.2.1.3-1 shows times to onset of symptoms. As shown in the figure, the symptoms in this region will generally be respiratory. At pressures of oxygen at around 253 mm Hg (5 psia), changes in red blood cell fragility and cell wall permeability have been reported at long periods of exposure.

5.1.2.2.1.4 Chronic CO_2 Toxicity Design Considerations

{A}

Long-term exposures to CO_2 concentrations in the range of 1-1.5% will generally not produce significant changes in blood pressure, pulse, or temperature (chronic CO2 toxicity). Such exposures have been noted to produce significant alterations such as respiratory acidosis, increased carbonate retention in bone tissue, increased cortical adrenal activity, and decreased cardiovascular function. No outward apparent symptoms would be expected at this concentration.

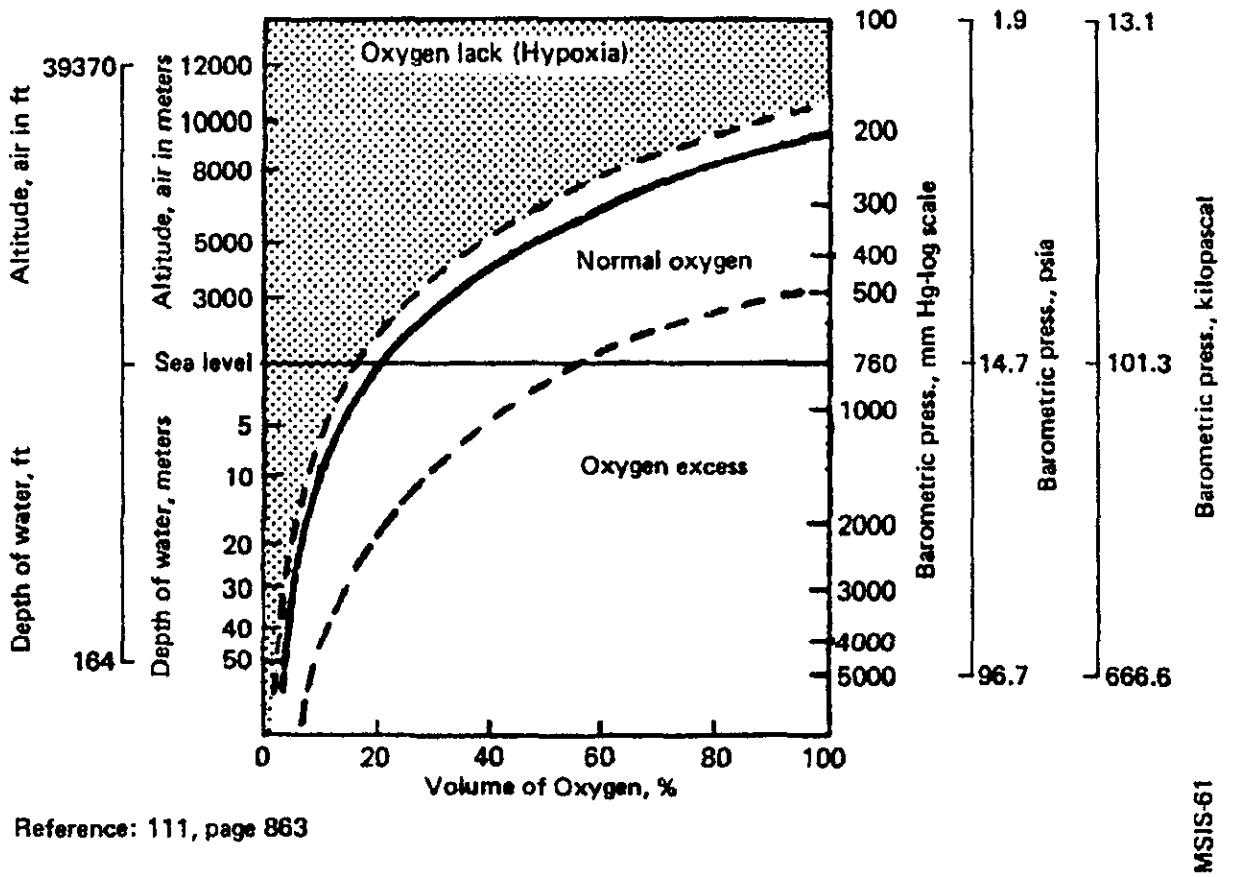

Reference: 111, page 863

Figure 5.1.2.2.1.1-1. Hypoxia Danger Zone

Oxygen partial pressure mmHg (psia)	Effect
160 (3.1)	Normal sea level atmosphere level
137 (2.7)	Accepted limit of alertness. Loss of night vision. Earliest symptoms is dilation of the pupils.
114 (2.2)	Performance seriously impaired. Hallucinations, excitation, apathy.
100 (1.9)	Physical coordination impaired, emotionally upset, paralysis, loss of memory.
84 (1.6)	Eventual irreversible unconsiousness.
0-46 (0-0.89)	Anoxia — near-immediate unconsiousness, convulsions, paralysis. Death in 90 to 180 seconds.

MSIS 62

Reference: 92, Page 38
111, Page 863

Note: The effects of falling oxygen pressure is insidious, as it dulls the brain ad prevents realization of danger.

Figure 5.1.2.2.1.1-2 Effects of Insufficient Oxygen

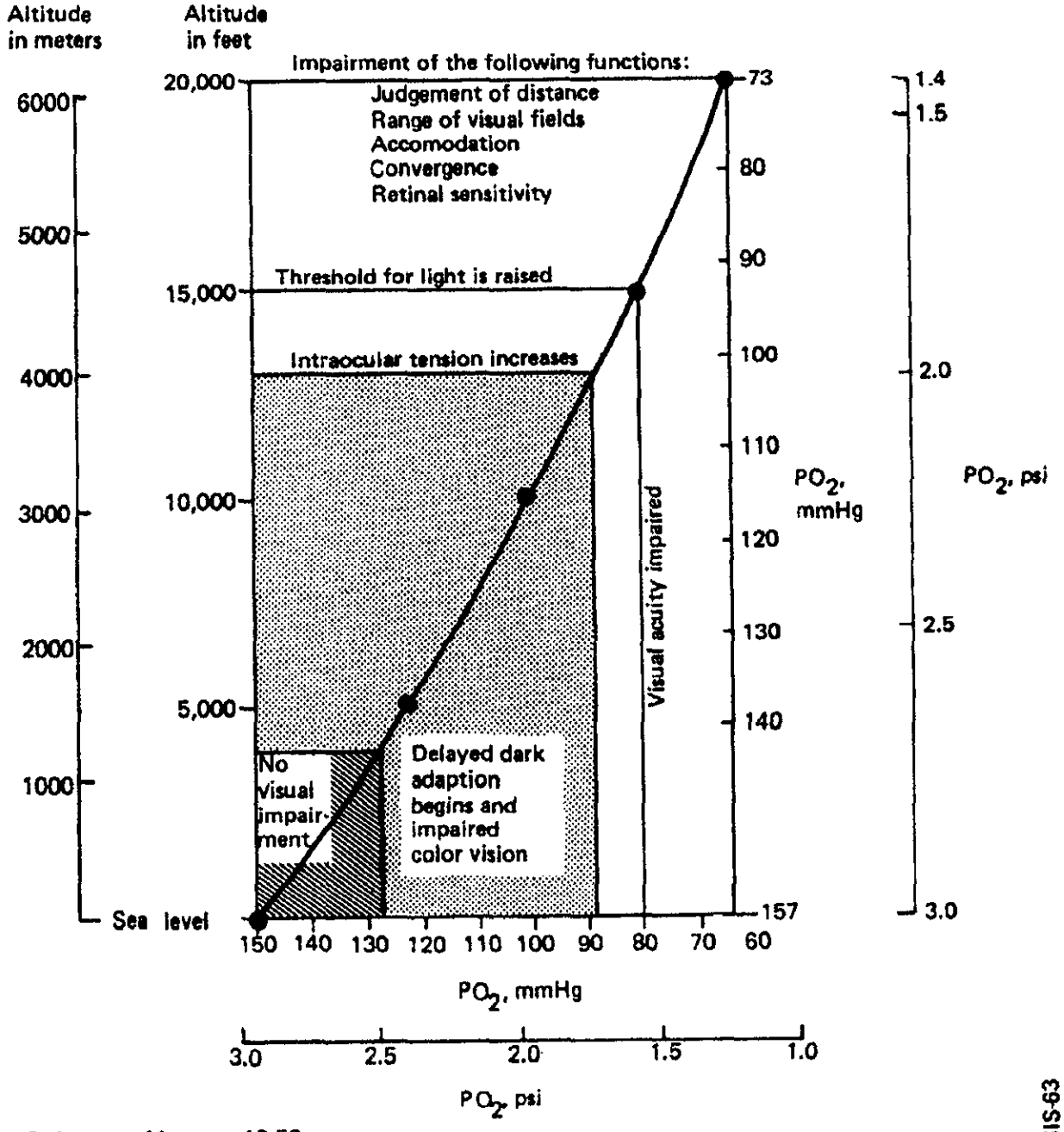

Reference: 11, pages 10-50

MSIS-63

Figure 5.1.2.2.1.2-1. Impairment of Visual Functions Produced by Hypoxia

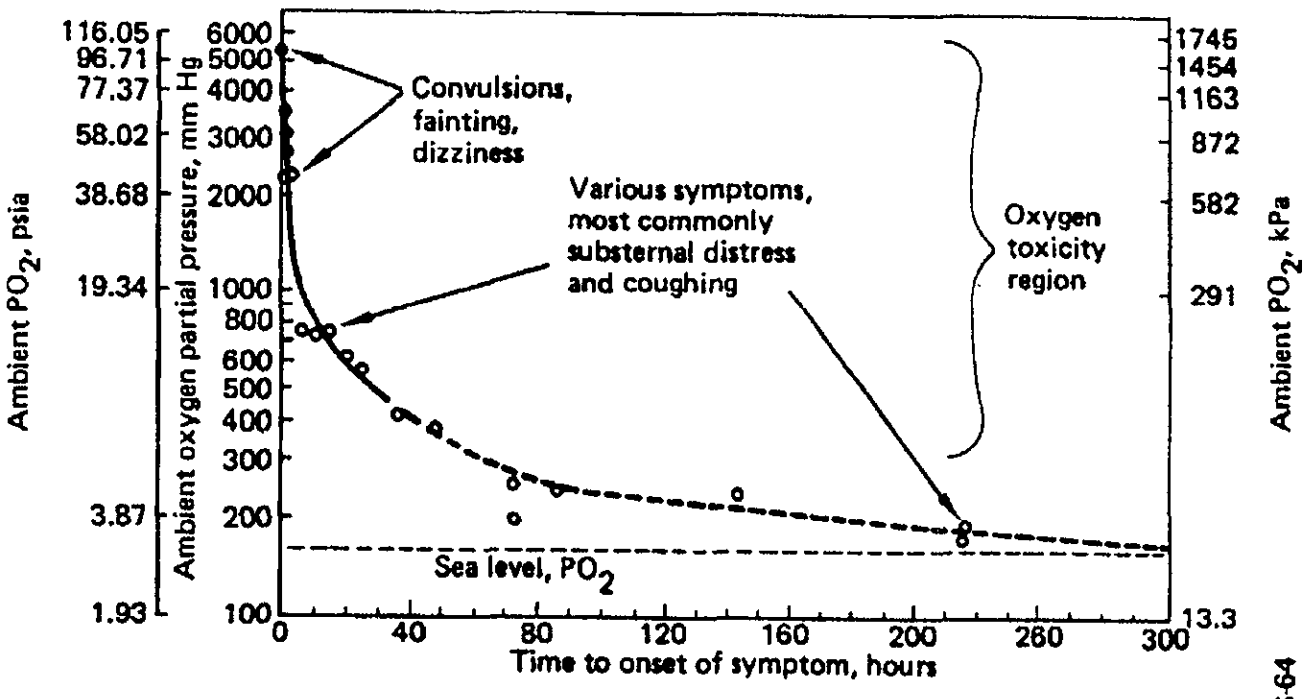

Reference: 92, Figure 2-10, page 46

Figure 5.1.2.2.1.3-1. Approximate Time of Appearance of Hyperoxic Symptoms as a Function of Oxygen Partial Pressure

At CO_2 concentrations of about 3%, crewmembers will typically exhibit increased motor activity, excitement, euphoria, mental acuity and sleeplessness for about a day, followed by headache, mental depression and cloudiness, decreased memory and attentiveness, and decreased appetite. Typically, after the third day, there will be some return to normal.

Generally, subjects have felt normal after a week of breathing normal air again, and the characteristics have returned to normal after a month.

5.1.2.2.1.5 Acute CO_2 Toxicity Design Considerations

{A}

Figure 5.1.2.2.1.5-1 shows effects of increased CO_2 concentration on respiration volume, rate, and pulse rate. It has been noted that individuals with a relatively large tidal volume and slow respiratory rate show less respiratory and sympathetic nervous system responses while breathing low concentrations of CO_2.

Figure 5.1.2.2.1.5-2 shows CO_2 partial pressure rate increase, with loss of CO_2 removal function, for space modules of various volumes and configurations. Limits are defined as operational, 90-day degraded, 28-day emergency, and critical. Other effects of increased CO_2 concentration (in the range of 3-7%) are:

a. Reduced body temperature, typically 0.5° - 1.5° C (1° - 3° F.).

b. Increased urine production (up to three times normal rate).

c. Reduced aerobic capacity (13% - 15% reduction).

Acute CO2 toxicity symptoms include dyspnea, fatigue, impaired concentration, dizziness, faintness, flushing and sweating of face, visual disturbances, and headache. Exposure to 10% or greater concentrations can cause nausea, vomiting, chills, visual and auditory hallucinations, burning of the eyes, extreme dyspnea, and loss of consciousness. Without therapeutic support, respiratory depression, convulsion, shock, and death may result from CO2 concentrations above 10%.

5.1.2.2.1.6 CO_2 Withdrawal Design Considerations

{A}

CO2 withdrawal symptoms can be experienced after the cessation of certain exposures to CO2 and can result in even greater functional impairment than the exposure itself. Headaches of varying severity are common. Withdrawal from more acute exposures

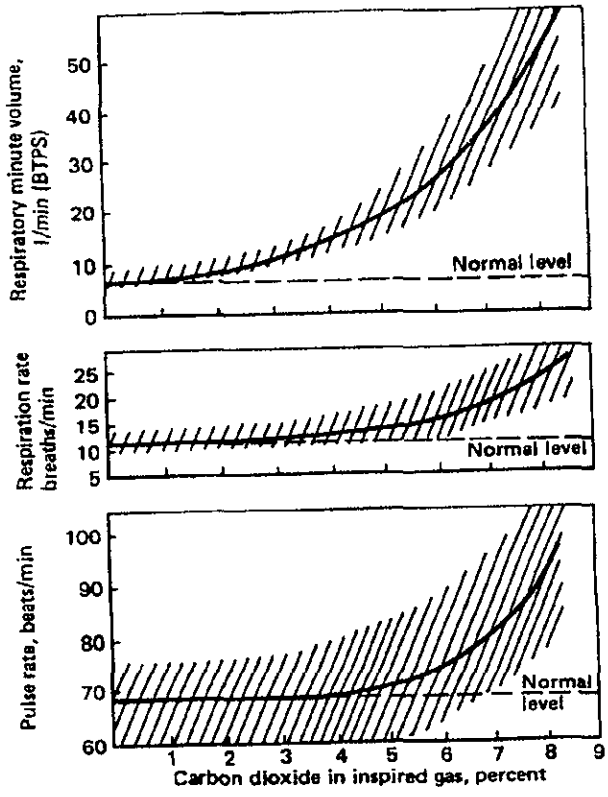

Reference: 6, page 41
11, page 10-64
21, page 3

Note:
Subjects at rest, hatched areas represent deviations from the mean

MSIS 65

Figure 5.1.2.2.1.5-1. Effects of Increased Carbon Dioxide Inhalation

Cases cited

Curve	No. mod./vol. (1)	No. crew
1	1 smod	8
2	1 smod	4
3	1 lmod	8
4	1/2 spst	8
5	1 lmod	4
6	1/2 spst	4
7	1 spst	8
8	1 spst	4

Note:

1 Smod=1 short module=81.3m^3 (2873ft^3)

1 lmod=1 long module=176.7m^3 (6244ft^3)

1 Spst=1 space station=548.7m^3 (19,387ft^3)

Assumptions

1. 1.0 Kg (2.2lb) CO2/person day metabolic rate
2. CO2 leakage overboard negligible
3. Delta configuration volumes
   a. 81.3m3 (2,873ft^3) short module
   b. 176.7m3 (6,244ft^3) long module
   c. 72.8m3 (2,572ft^3) logistics module
   d. 21.7m3 (768ft^3)tunnel
   e. 8.4m3 (296ft^3) interface module
   f. 548.6m3 (19,387ft^3) space station
4. Equipment volume equals 10% of volume
5. 3 mm (0.058 psia) Hg carbon dioxide partial pressure initially
6. 760 mm (14.7 psia) atmosphere pressure

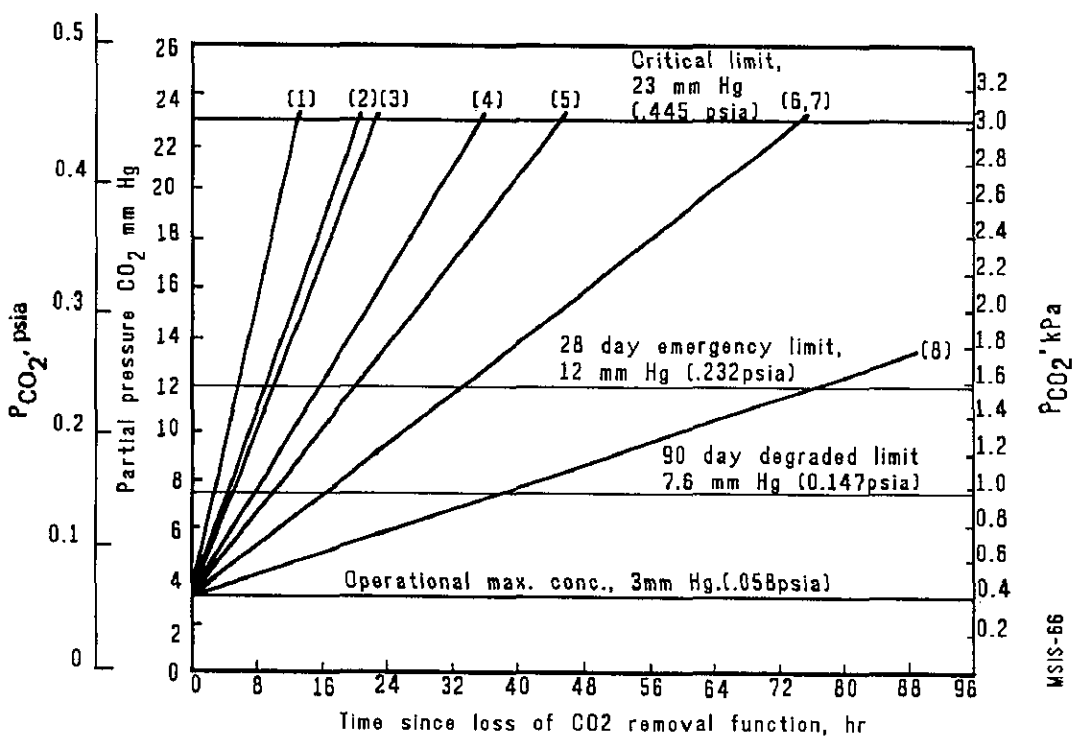

Reference:322

Figure 5.1.2.2.1.5-2. Carbon Dioxide Partial Pressure Increase Without Carbon Dioxide Removal

may cause dizziness. Symptoms are more marked during acute exposures to 5-10% CO2 than during chronic exposures to CO2 concentrations below 3%. In the extreme case, profound hypotension and grave cardiac arrythmias may occur. It has been observed that subjects recover from CO_2 exposure better when breathing oxygen than when breathing air.

5.1.2.2.1.7 Dysbarism Sickness Design Considerations

{A}

Any diluent gas present in the cabin atmosphere will establish an equilibrium concentration in body tissues. If the ambient pressure is lessened, a certain amount of the diluent will come out of solution. If the pressure change (dysbarism) takes place slowly enough, the diluent can be transported away normally by the bloodstream. However, if the pressure change is rapid enough through a large differential, the diluent may come out of solution rapidly and form gas bubbles. A major consequence of this phenomenon is known as decompression sickness.

5.1.2.2.1.7.1 Evolved Gas Dysbarism Design Considerations

{A}

The varied symptoms and pathological physiology of the effects of dysbarism can be divided into several categories under decompression sickness: bends, chokes, skin manifestations, circulatory collapse, and neurological disorders. The relative incidence of the different symptoms varies with the type and partial pressure of the gas at equilibrium, the level of exercise, and final pressure. Figure 5.1.2.2.1.7.1-1 shows the percent of exposed subjects per minute experiencing new symptoms (bends of grade 2 or > and chokes) at given times after exposure to 38,000 ft. at rest from previous sea level conditions with no preheating. The curve is thought to reflect the size history of a typical gas bubble in the sensitive tissue for these specific conditions.

Tests with EVA representative decompression, work rates, and prebreathe show a considerably delayed incidence of decompression sickness with symptoms occurring as late as the sixth hour in a 6-hour decompression.

Bends, the most common symptom, is manifested by pain in the locomotor system. This pain usually begins in the tissue around joints and extends distally along the bone shaft. Pain tends to occur in joints that are being flexed. The pain is deep and poorly localized with periods of waxing and waning. Relief is obtained by relaxation of the part of application of external pressures to the overlaying tissues. Symptoms may spontaneously disappear.

The next most common symptom complex is chokes. Chokes refer to a syndrome of chest pain, cough, and respiratory distress. It usually requires longer altitude exposure than that required for bends. It commences with a burning pain under the breast bone during deep inspiration which is relieved by shallow breathing and gradually becomes more severe and constant. Paroxysms of coughing become more frequent and are followed by cyanosis, anxiety, snycope, and shock.

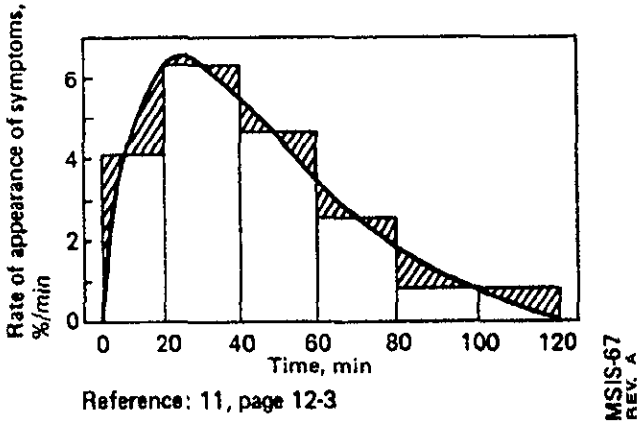

Figure 5.1.2.2.1.7.1-1. Typical Time Course of Appearance of New Symptoms of Decompression Sickness in Absence of Prebreathing

Skin lesions, causing itching and a red blotchy rash, usually occur only after prolonged altitude exposure and are associated with, or presage, more serious manifestations of decompression sickness. About 10% of those cases going on to neurocirculatory collapse present previous skin changes. It appears that passage of emboli to the skin is the most probable mechanism.

Cardiovascular symptoms are varied: fainting, low blood pressure, coronary occlusions, heart arrythmias, and shock have all been seen. Severe and progressive peripheral vascular collapse may develop after one to five hours at altitude. This reaction may, or may not have been preceded by fainting. Signs and symptoms of shock with or without neurological findings are seen. Delirium and coma are more common when neurological findings are present. All fatalities following altitude exposure are preceded by this picture of delayed shock. It usually develops in subjects who have experienced severe chokes, but may be preceded by few or no symptoms. The types of neurologic symptoms run the gamut of almost every acute neurologic disorder. Confusion, visual impairment, and headaches are the most common.

The precise conditions under which a particular individual will develop symptoms of decompression sickness are impossible to predict. In general, for an atmosphere using nitrogen as a diluent, if the supersaturation ratio $R = pN_2/pB$ exceeds about 1.22, there will be a risk of decompression sickness. (In the above equation, pN_2 is the nitrogen tension in the subject tissue, and pB is the total barometric pressure). For other diluent gases, the critical R value will be different. The tissue tension of the diluent gas at any particular time will depend on the initial and final equilibrium tensions, the solubility of the diluent in the subject tissues, and the rate and duration of decompression. As an example, hypobaric decompression sickness (DCS) from a normal sea-level atmosphere will occur typically only after decompression below 490 mm Hg (9.5 psia). This onset of DCS pressure will vary some depending on the susceptibility of an individual as influenced by any of the following factors:

a. Body Build - Obesity increases susceptibility to decompression sickness. It is less clear if the percent of body fat within a normal range affects the incidence of decompression sickness.

b. Temperature - Very cold conditions can increase the incidence of decompression sickness significantly.

c. Previous Exposures to Low Pressure - Repeated exposures to hyperbaric conditions may, or may not increase susceptibility to decompression sickness depending on the nature of the exposure. When EVA-type exposures have been repeated over a three-day period, there was no increase in susceptibility.

d. Barometric Compression Prior to Decompression - Any exposure to compressed air breathing occurring less than 24 hours prior to decompression will increase susceptibility.

e. Age - A threefold increase in incidence of decompression sickness has been observed in going from 19 to 25-year old to 40 to 45-year old age groups. In other studies, age has not been a factor for the crewmember population used in these studies.

f. Sex - Valid, conclusive studies are lacking, but it appears that women present a greater risk to decompression sickness than men do.

g. Exercise - Physical exertion can increase the incidence of decompression sickness by up to 40%.

h. Injury - Perfusional changes in an injured area particularly in a joint, may create an increased susceptibility to decompression sickness.

Decompression sickness can be prevented by denitrogenation prior to decompression. This is accomplished by breathing pure oxygen, which reduces alveolar nitrogen pressure and allows nitrogen to come out of the tissues of the body. Figure 5.1.2.2.1.7.1-2 shows nitrogen eliminated over time while breathing pure oxygen.

5.1.2.2.1.7.2 Trapped Gas Dysbarism Design Considerations

{A}

If the glottis is held closed during a decompression, or if the air passageway to the lungs is restricted or blocked (e.g., when using an oxygen mask) it is possible for the trapped gas in the alveoli to expand the alveoli past their elastic limit. A differential pressure between the alveoli and the ambient of 50 to 100 mm Hg (1.0 to 2.0 psi) may be sufficient to force gas into extra-alveolar space. Such an accident will likely result in arterial gas embolism, mediastinal and subcutaneous emphysema, and/or pneumothorax.

The effects of gas embolism are similar to those of decompression sickness, but occur immediately in contrast to the delay observed in decompression sickness, and the signs may clear rapidly, leaving a clinical picture similar to stroke.

Mediastinal emphysema, subcutaneous emphysema, and pneumothorax refer to conditions of accumulations of gas in the mediastinal cavity between the pleurae, under the skin, and in the pleurae, respectively.

Typically, equalization of pressure between air pockets in the body and the ambient will take place without conscious effort, except when there is a blockage in the air passages, as discussed above, or if the rate of depressurization is such that equalization cannot take place rapidly enough to produce effects. If this occurs, the most likely injuries will occur to the ear and sinuses, which have the smallest and most easily blocked passages to the ambient.

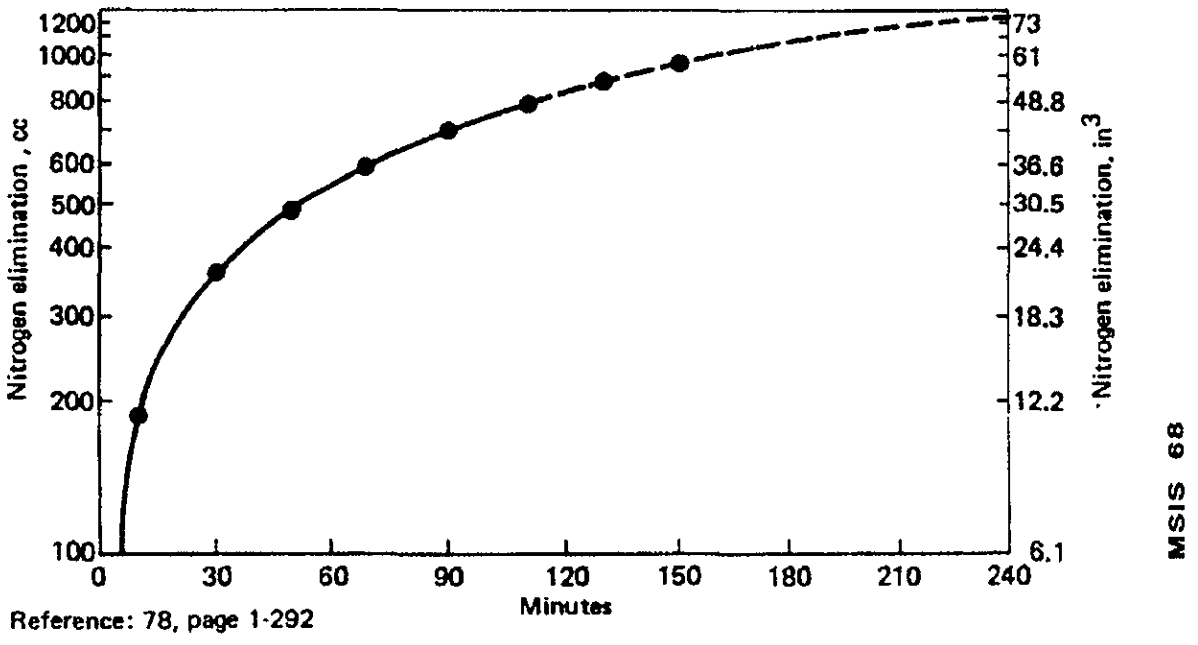

Figure 5.1.2.2.1.7.1-2. Nitrogen Elimination Curve

Ear problems associated with change in barometric pressure are tabulated in Figure 5.1.2.2.1.7.2-1.

Occasionally, toothaches are reported due to changes in barometric pressure, usually occurring in teeth that are filled or have cavities, thereby allowing an air bubble to be trapped within.

5.1.2.2.1.7.3 Toxic Gaseous Contaminants Design Considerations

{A}

The effects of carbon monoxide (CO) toxicity and blood levels of carboxyhemoglobin after exposure to different atmospheric concentrations of carbon monoxide are shown in Figure 5.1.2.2.1.7.3-1.

Differential pressure mmHg (psia)	Symptom
0 (0)	No sensation
3-5 (.06-0.10)	Feeling of fullness in ears
10-15 (0.19-0.29)	More fullness, lessened sound intensity
15-30 (0.19-0.29)	Fullness, discomfort, *tinnitus* in ears; ears "pop" as air leaves middle ear; desire to clear ears — if accomplished, symptoms stop
30-60 (0.58-1.16)	Increasing pain, tinnitus, and dizziness
60-80 (1.16-1.54)	Severe and radiating pain, dizziness and nausea
~ 100 (~ 1.93)	Voluntary ear clearing becomes difficult or impossible
200 + (3.87+)	Eardrum ruptures

Reference: 92, Table 1-3, Page 14

MSIS-70

Figure 5.1.2.2.1.7.2-1. Type of Ear Problems Encountered During Change in Barometric Pressure

Carbon monoxide is particularly dangerous because it is odorless and colorless and symptoms of toxicity are not readily noticeable. CO is produced by crew metabolism, materials offgassing, and materials thermodegradation or combustion. Normally, the onboard ECLSS ambient temperature catalytic oxidizer (ATCO) does a good job of keeping CO at safe, low levels. CO would be a toxicological concern, however, if the platinum catalyst in the ATCO system were to be poisoned by another chemical or if a fire or smoldering combustion on board produced more carbon monoxide that the ATCO system could handle.

Ozone may possibly be produced by electric motors, welding, or ultraviolet light rays in the onboard lighting system. It is especially prone to be produced if there is electric arcing. Exposure to ozone at concentrations of 0.3 to 0.8 ppm causes irritation of the nose and bronchi. Exposure to 0.94 ppm also causes sleepiness and headache. Exposure to 1.5 ppm has been described as intolerable. The lethal concentration in 50% of rats and mice exposed (the LC50) is around 6 ppm. The animals died of shock with edema and hemorrhage in the lungs and bronchi. Higher animals, such as dogs and monkeys, appear to be somewhat more resistant. Persons who have been continuously exposed to ozone develop some tolerance to its effects.

Materials of construction are a source of gaseous contamination due to offgassing to the cabin atmosphere. Offgassing requirements and test procedures are detailed in Reference 24. Compounds for which seven-day maximum allowable concentrations have been established in manned spacecraft are also listed in Reference 24.

Atmospheric carbon monoxide, volumes per million	Carbon monoxide in blood, % Carboxyhemoglobin	Effects
0-60	0-10	None subjectively noticeable, but initial visual and psychomotor impairment is revealed in objective tests.
60-120	10-20	Tightness across forehead, slight headache, flushed complexion.
120-180	20-30	Headache with throbbing in temples, breathlessness from any exertion.
180-240	30-40	Severe headache, weakness, dizziness, dimness of vision, nausea, and vomiting with possibility of collapse.
240-300	40-50	All preceding symptoms with increased pulse rate and respiration and greater possibility of collapse.
300-360	50-60	Loss of consciousness, with increased or irregular respiration, rapid pulse, and possibility of coma with convulsions.
360-480	60-80	Coma, convulsions, depressed heart action, respiratory failure, and possibility of death.

MSIS-71

Reference: 111, Page 865

Figure 5.1.2.2.1.7.3-1. Effects of Carbon Monoxide Exposure

5.1.2.3 Atmosphere Monitoring Design Considerations
{A}

5.1.2.3.1 Atmosphere Toxicological Monitoring Design Considerations
{A}

Long tours of duty for crewmembers, closed Environmental Control Life Support Systems (ECLSS), and the possibility for potentially hazardous internal operations make the following three types of analyzers necessary for the toxicological monitoring of spacecraft air during long-duration manned space flights:

a. Regular Monitoring - The continuous generation of contaminants by the offgassing of non-metallic materials in the vehicle and the potential for chemical spills or leaks necessitate regular monitoring for volatile organics.

b. Compound-Specific Analyzer - Other potential contaminants, such as low volatility organics and inorganics, metals, acid gases, and other gases such as carbon monoxide and nitrous oxide, may require dedicated, compound specific analyzers.

c. Particulate Monitoring - Based on Shuttle program experience, problems with airborne particulate matter can be anticipated and warrant an inflight particulate monitoring capability.

5.1.2.3.2 Atmosphere Microbiological Monitoring Design Considerations
{A}

Epidemiological principles and previous spaceflight studies indicate a high probability of cross-contamination among crewmembers and between crewmembers and space module during long confinements. The ability to monitor, identify, and characterize the microbial flora of the space module is essential due to continual habitation, relatively crowded conditions, and possible altered host/microorganism interactions. The following three design considerations are of particular importance for microbiological monitoring of space module air.

a. Traditionally, ECLSS systems (because of design constraints) have a limited capacity for removing biological agents from the air.

b. The unique properties of microgravity affect the distribution of microbial agents in the space module environment. On Earth, gravity is an important physical force in reducing the presence of aerosols in the air and thus, helps contain the spread of some infectious diseases. While large particles and droplets containing microorganisms are removed from the air in minutes in a 1-G environment, these aerosols may remain suspended indefinitely in microgravity.

c. The immunological status of crewmembers may be compromised due to physiological effects associated with stress and long periods of habitation in a microgravity environment.

5.1.2.3.3 Baro-Thermal Monitoring Design Considerations
{A}

The collection and analysis of atmospheric data (including barometric compositional, and thermal balance information) within the space habitat environmental system are necessary for monitoring human and environmental interactions. The environments to be monitored include those in the habitation modules, the airlocks, and the space suits. This information will be used to characterize the crew's environment relative to the environmental limits established to ensure crew health and safety. The derived information will form a database for analysis of any effect of these controlled environment factors on physiological responses of the crew to the microgravity environment.

The sensors required to monitor the environmental parameters described above are in large components of the cabin and suit environmental control system and in most uses will not require development of separate sensing systems.

5.1.3 Long Term Mission Atmosphere Design Requirements

{A}

Paragraphs 5.1.3.1 through 5.1.3.5 present requirements which are directly applicable to the design of respirable atmospheres for space module cabins for long term missions. These requirements may not be entirely applicable to short term space systems (e.g.; the STS Program or the Spaceplane. Included are atmosphere composition and pressure, monitoring and control of atmospheric parameters, and contaminants and toxicity.

5.1.3.1 Atmosphere Composition and Pressure Design Requirements

{A}

The following design considerations shall apply to the composition and pressure of the space module cabin atmosphere:

a. Internal Environment - An internal environment shall be provided adequate to support and maintain crew comfort, convenience, health, and well being throughout all operational phases in accordance with the requirements given in Figure 5.1.3.1-1. Concentrations of atmospheric contaminants in habitable areas of the space module shall not exceed the spacecraft maximum allowable concentrations (SMACs) as specified for various exposure periods in Figure 5.1.3.1-1 Spacecraft Maximum Allowable Concentrations. If no FCSIS SMAC is currently documented for a particular compound of interest, the 7 day SMAC values specified in NHB 8060.1B Appendix D apply. The SMAC values documented in the FCSIS Vol, I, Rev. A, take precedence over the SMAC values listed in NHB 8060.1B. Because ambient pressures on SSMB will be less than 14.7 psi, SMAC values in mg/m^3 rather than ppm shall apply. (Refer to Paragraph 5.8.3.1, Temperature, Humidity, and Ventilation Design Requirements, for other atmosphere related design requirements.)

b. Atmospheric Revitalization - An atmospheric revitalization system shall continuously regenerate the module atmosphere as required to provide a safe and habitable environment for the crew. This system will be referred to as the Environmental Control Life Support System (ECLSS).

c. Atmosphere Control and Supply :

1. Atmospheric pressure and composition control functions shall provide a method of regulating and monitoring the total pressure and the major constituent partial pressures of gases in the module atmospheres.

2. The total pressure of the module shall be maintained at the pressure levels defined in Figure 5.1.3.1-1.

3. The controls shall be provided and shall be operable by a crewmember in a shirt sleeve environment or by a remote operator. For specific requirements for pressure suit operations for repressurization see Paragraph 9.2.3.2.1 b.

4. Normally, the controls shall operate autonomously with limited or no crew intervention necessary.

d. ECLSS Design Requirements :

1. The systems of the ECLSS will provide atmospheric pressure and composition control, module temperature and humidity control, atmospheric revitalization, water management, EVA support, and fire and contamination monitoring and control.

2. The ECLSS shall accommodate whatever phased evolutionary growth is anticipated for the space module.

Parameter	Units	Operational	90-day degraded (1)	28-day emergency
CO_2 partial press	mmHg	3.0 max	7.6 max	12 max
Temperature (7)	deg. F	65-80	65-80	60-85
Dew point (2)	deg. F	40-60	35-70	35-70
Ventilation	ft/min	15-40	10-100	10-200
O_2 partial pressure (3)	psia	2.83-3.35	2.4-3.45	2.3-3.45
Total pressure	psia	14.5-14.9	14.5-14.9	14.5-14.9
Diluent gas		N_2	N_2	N_2
Trace contaminants (6)	ppm	TBD	TBD	TBD
Micro-organisms	CFU/m^3 (4)	500 (5)	750 (5)	1000 (5)
Particulates > 0.5 micron	counts/ft^3	100,000 max	TBD	TBD

(a) Respirable Atmosphere Requirements (Customary Units)

Parameter	Units	Operational	90-day degraded (1)	28-day emergency
CO_2 partial press	N/m^2	400 max	1013 max	1600 max
Temperature (7)	deg. K	291.5-299.9	288.8-302.6	288.8-305.4
Dew point (2)	deg. K	277.6-288.7	273.9-294.3	273.9-294.3
Ventilation	m/sec	.076-.203	.051-.508	.050-1.016
O_2 partial pressure (3)	kP_2	19.5-23.1	16.5-23.8	15.9-23.8
Total pressure	kP_2	100-101.4	100-101.4	100-101.4
Dilute gas	———	N_2	N_2	N_2
Trace contaminants (6)	mg/m^3	TBD	TBD	TBD
Micro-organisms	CFU/m^3 (4)	500 (5)	750 (5)	1000 (5)
Particulates > 0.5 micron	counts/m^3	3,530,000 max	TBD	TBD

MSIS 72 REV. A

(b) Respirable Atmosphere Requirements (SI Units)

Reference: 37, Figure 20101-A, B
92, pages 2, 42, 55
111, page 863
198, page 27
264, Table 11.2, Paragraph 11.1.1/4
268, page 5
278
321, Table 2.4-1
323, Table C-4-IX, page C-4-45
324, Table 2-9

Notes:
(1) Degraded levels meet "fail operational" criteria.
(2) Relative humidity shall not exceed 70% in the operational mode or 75% in the degraded mode or 75% in the degraded or emergency mode and shall not be less than 25%
(3) In no case shall the O_2 partial pressure be below 15.9 kP_2 (2.3 psia) or the O_2 concentration exceed 23.8 percent of the total pressure at 14.7 psia.
(4) CFU — Colony Forming Units.
(5) These values reflect a limited base. No widely sanctioned standards are available.
(6) Will be based on NHB 8060.1B, (J8400003).
(7) In the operational mode temperature will be selectable to $\pm$ 1.1°C ($\pm$ 2°F) throughout the range

Figure 5.1.3.1-1 Requirements for Space Module Respirable Atmosphere

3. The ECLSS shall embody regenerative concepts to minimize the use of expendables.

e. Hyperbaric Treatment - Where altitude decompression sickness may occur as a result of operational activity or contingency operation, access to a hyperbaric treatment facility is required.

5.1.3.2 Atmosphere Monitoring Design Requirements

{A}

Atmospheric monitoring instruments shall require as little crew time as possible for operation and maintenance .

5.1.3.2.1 Atmosphere Toxicology Monitoring Design Requirements

{A}

Design requirements for monitoring of volatile organics, airborne particulate matter, and compound-specific monitoring are as follows:

a. Monitoring Volatile Organics - The monitoring of volatile organics shall be accomplished.

1. Total hydrocarbon analyzers shall be used to monitor the overall organic concentration in the air of all habitable areas. These analyzers shall provide real time indication of total organic contamination in the air. These monitors shall be equipped with audible and visible alarms to alert crewmembers when contaminant concentrations exceed maximum acceptable levels.

2. An additional monitor shall be available to identify and quantify target organic compounds and take measurements at regularly scheduled intervals.

b. Compound-Specific Monitoring :

1. Compound specific monitors shall be located near equipment, chemical operations, and processing activities which are potential sources of chemical contamination of the space module. These monitors shall be used to monitor for specific chemical contaminants in the air. These analyzers shall have continuous real-time monitoring capabilities.

2. These monitors shall be equipped with audible and visible alarms to alert crewmembers when concentrations exceed maximum acceptable levels.

c. Particle Monitor - A monitor shall be provided to determine nonspecific particulate loading in the air on a real-time basis. Respirable particles in the 0.5-100 micron range per unit volume of air shall be measured.

5.1.3.4 Atmosphere Microbiological-Monitoring & Control Design Considerations

{A}

The microbiological monitoring and control design considerations are as follows.

a. Limits - The limits given in Figure 5.1.3.4-1 shall be observed.

b. Air Sampler - Monitoring of the air will be conducted. An air sampler shall monitor air throughout the habitable areas of the facility. It shall be capable of monitoring for the presence of bacteria, yeast and molds.

5.1.3.4.1 Microbial Decontamination Design Requirements

{A}

Decontamination is required when acceptability limits are exceeded or sensory factors indicate microbial contamination has occurred. Decontamination procedures, antimicrobial agents, and supporting equipment shall be provided to counteract and control all contamination events.

Sample source	Monitoring Requirements		Postflight	Acceptability Limit
	Preflight	Inflight		
Air	Prior to closeout	Weekly intervals and within 12 hrs of crew exchange	—	Levels of airborne microorganisms may not exceed 500 CFU per cubic meter

Reference: 278, Figure C-2-6
With Updates
Notes: CFU - Colony forming unites

MSIS-73 REV. A

Figure 5.1.3.4-1 Atmosphere Microbiological Limits and Monitoring Requirements

5.1.3.4.2 Verification Design Requirements

{A}

Following decontamination measures, the previously contaminated entity shall be re-tested and verified to be within acceptability limits.

5.1.3.4.3 Cross Contamination Design Requirements

{A}

The following cross contamination design considerations shall apply:

a. Bioisolation Facilities - All procedures involving the maintenance and experimentation activities of biological specimens will be conducted in bioisolation facilities that prevent microbial (bacteria, fungi, and parasites) cross- contamination between crewmembers and biological specimens.

b. Pathogen Free Animals - All experimental animals to be utilized aboard the space module shall meet the specific pathogen free criteria established for the applicable project.

5.1.3.5 Baro-Thermal Monitoring Design Requirements

{A}

To insure that all environmental control systems are functioning properly, the Environmental Monitoring System shall monitor and record atmospheric parameters from each habitable element.

5.2 MICROGRAVITY

{O}

5.2.1 Introduction

{O}

This section provides a short description of the design considerations for the microgravity environment. The physiological effects of microgravity are stressed. More detailed data related to microgravity are found in Paragraph 3.3.4, Neutral Body Posture; Paragraph 4.0, Human Performance Capabilities; Paragraph 5.3, Acceleration; Paragraph 8.0, Architecture; paragraph 9.0, Workstations; and Paragraph 11.0, Hardware and Equipment.

The term "microgravity" denotes the acceleration regime commonly referred to as "weightlessness", "zero gravity", or "null gravity". It is almost impossible to achieve a pure "zero-g" environment due to the orbital mechanics. The only place on a spacecraft (in a stable orbit) that is at "zero-g" is at the spacecraft's center of mass.

For the purposes of man-system integration, any acceleration level below 1E-4 G's is, for all practical purposes, "zero-gravity", or "weightlessness", or "microgravity". The physiological and performance effects are the same at any acceleration level at, or below, this approximate g-level.

5.2.2 Microgravity and Its Counterparts Design Considerations

{O}

This section addresses the physiological effects and the changes in eating, sleeping, and mobility design considerations associated with the microgravity environment.

5.2.2.1 Physiological Effects of Microgravity

{O}

This section addresses some of the physiological effects of microgravity. There is much more detail available on each of the selected topics that can be found in the references cited for this paragraph (refer to Appendix B in Volume 2).

Duration of microgravity exposure is a major factor in determining the detrimental effects described below. The longest US mission to date was the Skylab 4 mission of 84 days. There is a significant body of literature on the biomedical effects observed on this and the other Skylab missions. The Soviets have had crewmembers on orbit for a maximum of over 300 days. The biomedical data from these long- duration Soviet missions have not been widely published.

In general, it takes the body about three days to adjust to the microgravity environment. Most crewmembers become accustomed to working and living in space within a few hours and their performance improves throughout the mission. Most of the adverse biomedical effects are reversed within a matter of hours to weeks following return to Earth.

a. Calcium Loss - One of the biggest concerns during long-term microgravity exposure is the calcium loss from the bones. During the Skylab missions, this loss was not excessive. The Soviets indicate that the rate of calcium loss slows after four or five months. Calcium loss (which is similar to osteoporosis and is referred to as bone mass loss or bone demineralization) will limit the length of time crewmembers can remain in microgravity. At this time dietary mineral supplements are not known to be effective in preventing bone mass loss.

b. Fluid Shifts, Skeletal Changes, and Muscle Mass Loss - Other physiological effects are due to fluid shifts and decompression of the spine. The muscle mass of the lower body and, in particular the calves, becomes smaller due to disuse atrophy. Exercise can help reduce this tendency.

The body length increases due to spinal lengthening and straightening. The discs between the vertebrae expand (similar to what happens when sleeping) but do not recompress because of the lack of gravitational compression forces. There is also an upward shift of the internal organs causing a reduced waist measurement. These considerations should be taken into account when sizing space clothing.

There is a microgravity neutral body posture that results from a balancing of muscular forces acting on the various body joints in the weightless environment (see Figure 3.3.4.3-1). This neutral body posture causes some peculiar performance

effects. For example, it is difficult to work at waist level as is done on Earth as the arms must be continually forced down to the waist level to do work at the table top level. It is also difficult to bend forward as this requires significant effort by the abdominal muscles. It is difficult to stand erect or sit in an upright (1-G) manner. Putting on shoes and socks becomes a significant chore if tried to be done as it is on Earth.

Fluid shifts occur that redistribute body fluids toward the upper body. This is due to the lack of gravity effects that normally distribute the fluids toward the lower body. The most visible effect of fluid shift is seen in the face and neck. The face becomes swollen and the veins in the forehead and neck appear distended.

c. Vestibular Alterations - Another system adversely affected by the microgravity environment is the vestibular complex. Two categories of vestibular side effects result from microgravity. One category includes a variety of vestibular reflex phenomena such as postural and movement illusions, vertigo, and dizziness. The second category is space motion sickness. These two categories of response are believed to be closely tied; motion sickness often follows vertigo and postural illusions. There is evidence to suggest that as vestibular reflex phenomena disappear with adaptation, the rise of motion sickness subsides.

Conflicting stimulation of the visual, vestibular, and proprioceptive systems can produce deficiencies in sensory-motor coordination, including control of posture.

Space motion sickness exhibits symptoms resembling Earth motion sickness. These symptoms range from stomach awareness and nausea to repeated vomiting. Symptoms also include pallor and sweating.

Space sickness has been a recurring problem in the history of manned space flight. While this syndrome appears to decline within three to five days, in some cases, the degree of illness has hindered work capacity and disrupted the scheduling of important mission activities. Nine of the 25 Apollo astronauts suffered some degree of sickness, while five of the nine Skylab crewmembers experienced symptoms. Soviet cosmonauts have reported similar experiences. There were suggestions that the 1971 Soyuz 10 flight may have been prematurely ended due to space motion sickness.

Errors in interpreting the visual environment can occur during space motion sickness. Errors in the perception of lights are common. Fatigue may cause a loss of binocular vision. Movement illusions are marked by perceived rotation or by changes in perceived linear acceleration.

(Refer to Paragraph 4.5, Vestibular System, for detailed discussion of the effects of microgravity on the vestibular system; this includes more information on space motion sickness.)

(Refer to Paragraph 4.6, Kinesthesia, for a discussion of the effects of microgravity on kinesthesia.)

(Refer to Paragraph 4.8, Motor Skills, for a discussion of the effects of microgravity on coordination.)

5.2.2.2 Sleeping, Eating, and Mobility Changes in Microgravity

{O}

In the microgravity environment, sleeping, eating and mobility are all affected in some measure.

a. Sleep - It is difficult to isolate weightlessness as a factor influencing the quality of sleep. Sleep disturbances have been common during space flight, but these appear to be much more profoundly af-

fected by operational factors (thruster firings, fan noise, crew mobility) than by the microgravity environment alone. (Refer to Paragraph 7.2.4, Sleep, for more detailed discussion.)

b. Eating in Weightlessness - Space diets have consisted of freeze-dehydrated, intermediate moisture, thermo stabilized, and limited irradiated food. The freeze-dehydrated food is reconstituted inflight with either hot or cold water. Drinks and snacks are also provided. Initially, these foods were eaten through tubes incorporated into the food container, but it has been found that eating foods can be accomplished using conventional utensils. As food technology has improved, the food and food service utensils have approached the traditional practices on Earth.

(Refer to Paragraph 7.2.2, Nutrition, for details on nutrition.)

(Refer to Paragraph 10.5, Galley and Wardroom, for galley design considerations and requirements.)

c. Mobility - The absence of gravity has been found to be a bonus for locomotion in space. Once accustomed to movement in microgravity, mobility is accomplished with minimal effort. Acrobatic maneuvers, such as rolling, tumbling, and spinning, are done with ease.

(Refer to Paragraph 11.8 Mobility Aids, for mobility design considerations and requirements.)

5.2.3 Microgravity Design Requirements

{O}

The microgravity design requirements are given in other paragraphs where the applicable acceleration regime has been coded {O} (O = orbital). Refer to Appendix G in Volume 2 for a complete listing of all paragraph's acceleration regime applicabilities.

(Refer to Paragraph 1.4.3.3, Acceleration Regime Applicability, for an explanation of the acceleration regime coding used in this document.)

5.3 ACCELERATION

{A}

5.3.1 Introduction

{A}

This section addresses the design considerations and requirements for linear, rotational, and impact accelerations.

The documents and database include a coding for each paragraph that designates which acceleration regime(s) are applicable to the data.

(Refer to Paragraph 1.4.3.3, Acceleration Regimes Applicability, for an explanation of this coding.)

Figure 5.3.1-1 shows the coordinate system nomenclature that is used in this document. This system is based on the direction a body organ (e.g., the heart) would be displaced by acceleration. Table II in this figure (and in particular, system 4, which is based on displacement of body fluids) explains the most commonly employed terms.

(Refer to Paragraph 5.5, Vibrations, for the related acceleration environment of vibrations.)

(Refer to Paragraph 4.5, Vestibular System, for a description of the human vestibular system that is pertinent to discussion of acceleration environments.)

(Refer to Paragraph 5.2, Microgravity, for the special considerations and requirements for the microgravity environment.)

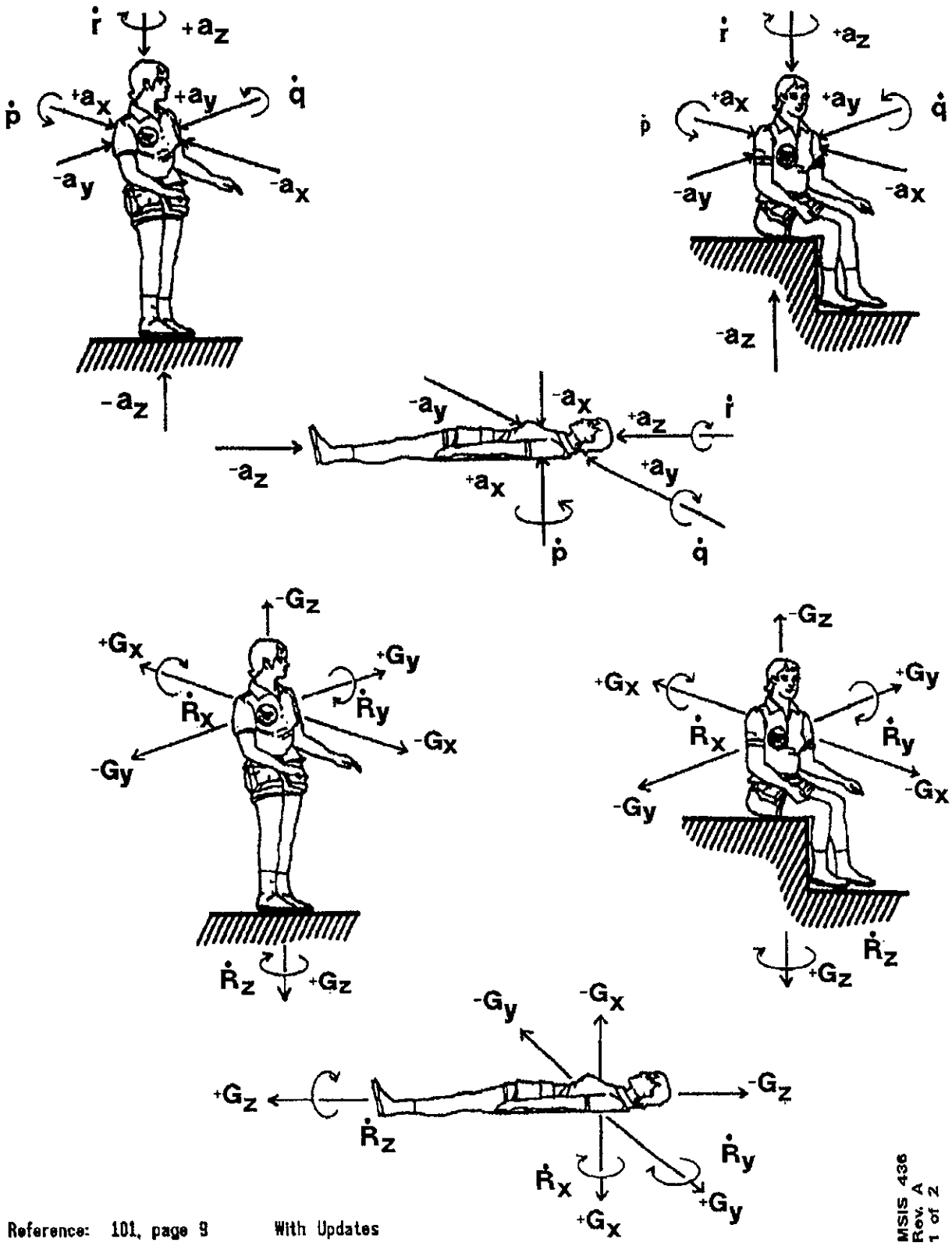

Figure 5.3.1.-1 Acceleration Environment Coordinate System Used in MSIS

LINEAR MOTION	Direction of Acceleration		Inertial Resultant of Body Acceleration	
	Acting Force	Acceleration Description	Reaction Force	Verticular Description
Forward	$+a_x$	Forward accel.	$+G_x$	Eye Balls In
Backward	$-a_x$	Backward accel.	$-G_x$	Eye Balls Out
Upward	$-a_z$	Headward accel.	$+G_z$	Eye Balls Down
Downward	$+a_z$	Footward accel.	$-G_z$	Eye Balls Up
To Right	$+a_y$	R. Lateral accel.	$+G_y$	Eye Balls Left
To Left	$-a_y$	L. Lateral accel.	$-G_y$	Eye Balls Right
ANGULAR MOTION				
Roll Right	$+\dot{p}$		$-\dot{R}_x$	Cartwheel
Roll Left	$-\dot{p}$		$+\dot{R}_x$	
Pitch Up	$+\dot{q}$		$-\dot{R}_y$	Somersault
Pitch Down	$-\dot{q}$		$+\dot{R}_y$	
Yaw Right	$+\dot{r}$		$+\dot{R}_z$	Pirouette
Yaw Left	$-\dot{r}$		$-\dot{R}_z$	

FOOTNOTES
Large letter, G, used as unit to express inertial resultant to whole body acceleration in multiples of the magnitude of the acceleration of gravity.
Acceleration of gravity, g_o, = 980,665 cm/sec^2 or 32.1739 ft/sec^2

Reference: 380
With Updates

MSIS 435
Rev. A
2 of 2

Figure 5.3.1-1 Acceleration Environment Coordinate System Used in MSIS

5.3.2 Acceleration Design Considerations

{A}

This section describes the acceleration environments and the human responses to these environments.

5.3.2.1 Acceleration Environments

{A}

This section contains the descriptions of the linear, rotational, and impact acceleration environments that can be encountered during space vehicle operations of launch, on-orbit, transorbit, planetary, entry, and aborts.

5.3.2.1.1 Linear Acceleration Environments

{A}

For space systems, sustained linear acceleration environments include the following:

a. Low Accelerations Experienced in Transorbital Flight - Approximately 10^{-6} to 10^{-3} G's (omnidirectional)

b. Low G-Levels Found on the Moon and Mars - Approximately 0.17 to 0.4 G's.

c. 1-G Level On Earth.

d. Multi-g's Experienced During Launch, Entry, and Abort Operations:

1. Approximately 1 to 6 +Gx during launch and entry (pre-Shuttle).

2. Approximately 1 to 2 +Gx during stage separation.

(Space Shuttle range is 1 to 3 +Gx during launch with a 4+Gx spike at booster ignition and 1/2 +Gx during separation maneuvers.)

5.3.2.1.2 Rotational Acceleration Environments

{A}

In the space environments, rotational accelerations are encountered during one of the following flight events:

a. Orbital Maneuvers - Approximately +/- 0.8 to +/- 1.46 deg/sec^2 (omnidirectional).

b. Launch/Entry/Abort Maneuvers - Approximately +/- 10 deg/sec^2 (omnidirectional).

5.3.2.1.3 Impact Acceleration Environments

{A}

Impact accelerations are abrupt onset, short duration, high magnitude acceleration/deceleration events. It is generally considered that impact involves the occurrence of forces of less than one second duration. Some impact conditions to which space crewmembers may be exposed include: thruster firing, ejection seat/ejection capsule firings, escape device deployment, flight instability, air turbulence, and crash landings:

Aircraft ejection seat firings - up to 17 +Gz

Crash landings - from 10 to greater than 100 G's (omnidirectional)

Orbiter crew compartment design loads for crash landings are 20 Gx and 10 +Gz.

Violent maneuvers - approx. 2-6 G's (omnidirectional).

Parachute opening shock - approx. 10 $+G_z$.

5.3.2.2 Human Responses to Linear Acceleration

{A}

This section describes the human responses to linear accelerations. This includes the factors that affect human tolerance to linear accelerations and the general and specific human responses.

5.3.2.2.1 Factors Affecting Human Acceleration Tolerance

{A}

Linear acceleration tolerance depends on many factors. The following is a brief summary:

a. Magnitude of the applied force.

b. Duration of the applied force.

c. Rate of onset and decline of the applied force.

d. Direction of the g vector.

e. Types of g-protection devices and body restraints.

f. The coupling between the crewmember and the vehicle via seats, couches, etc.

g. Body positioning, including the specific back, head and leg angles.

h. Environmental conditions such as temperature and lighting.

i. Age of the crewmember.

j. Emotional/motivational factors such as competitive attitude, fear, anxiety, self-confidence, confidence in equipment, and willingness to tolerate discomfort and pain.

k. Previous acceleration training, techniques of breathing, straining, and muscular control.

l. Human Physical condition.

m. Extent of Microgravity Adaptation and Body Fluid Shift.

n. Dietary Habits, particularly with respect to the quantities of Fruits, Fibers, and Fluids ingested.

5.3.2.2.2 Subjective Effects of Linear Accelerations

{A}

The following is a summary description of the combined human responses to specific linear acceleration vectors and magnitudes.

In operational situations it is unusual, if not impossible, for acceleration to remain precisely constant. Accelerations may be accompanied by complex oscillations and vibrations. For purposes of the following discussion, it is simpler to consider the response to sustained linear accelerations in one direction:

a. Upward Acceleration Effects (+ G_z) (In Seated Posture)

1 G_z	Equivalent to the erect or seated terrestrial posture
2 G_z	Increased weight; increased pressure on buttocks; drooping of face and body tissue
2 1/2 G_z	Difficult to raise oneself
3 - 4 G_z	Impossible to raise oneself; difficult to raise arms and legs; movement at right angles impossible; progressive dimming of vision after 3-4 seconds; progressive tunneling of vision
4 1/2 - 6 G_z	Diminution of vision; progressive blackout after about 5 seconds; hearing and then consciousness lost if exposure continued; mild to

severe convulsions in about 50% of the subjects during or following unconsciousness, frequently with bizarre dreams; occasionally paresthesias, confused states, and rarely, gustatory sensations; no incontinence; pain not common, but tension and congestion of lower limbs with cramps and tingling; inspiration difficult; loss of orientation of time and space for up to 15 seconds post-acceleration

b. Downward Acceleration Effects ($-G_z$)

$-1\ G_z$	Unpleasant, but tolerable, facial suffusion and congestion
-2 to $-3\ G_z$	Severe facial congestion; throbbing headache; origressive blurring, , or graying, or occasionally reddening of vision after 5 seconds; congestion disappears slowly; may leave petechial hemorrhages, edematous eye-lids
$-5\ G_z$	Five seconds is limit of tolerance rarely reached by most subjects

c. Forward Acceleration Effects ($+G_x$)

$2 - 3\ G_x$	Increased weight and abdominal pressure; progressive slight difficulty in focusing and slight spatial disorientation, each subsiding with experience; 2 G_x tolerable for at least 24 hours; 4 G_x tolerable up to at least 60 minutes
$3 - 6\ G_x$	Progressive tightness in chest, chest pain; loss of peripheral vision; difficulty in breathing and speaking; blurring of vision, effort required to maintain focus
$6 - 9\ G_x$	Increased chest pain and pressure; breathing difficult, shallow respiration from position of nearly full inspiration; further reduction in peripheral vision, increased blurring, occasional tunneling, great concentration required to maintain focus; occasional lacrimation; body, legs, and arms cannot be lifted at 8 G_x; head cannot be lifted at 9 G_x
$9 - 12\ G_x$	Breathing difficulty severe, increased chest pain, marked fatigue, loss of peripheral vision, diminution of central acuity, lacrimation
$15\ G_x$	Extreme difficulty in breathing and speaking, severe vicelike chest pain; loss of tactile sensation, recurrent complete loss of vision

d. Backward Acceleration Effects ($-G_x$)

Similar to those of $+G_x$ acceleration with modifications produced by reversal of the force vector. Chest pressure reversed, hence, breathing is easier; pain and discomfort from outward pressure toward restraint harness manifest at 8-Gx; forward head tilt cerebral hemodynamic effects akin to Gz; feeling of insecurity from pressure against restraint

e. Lateral Acceleration ($+/-G_y$)Little information available

+/- 3 Gy — Discomfort after 10 seconds; pressure on restraint system; feeling of supporting entire weight on clavicle; inertial movement of hips and legs; yawing and rotation of head toward shoulder; petechiae and bruising; engorgement of dependent elbow with pain

+/- 5 Gy — 14.5 seconds leads to external hemorrhage; severe headache after exposure

5.3.2.2.3 Specific Effects of Linear Accelerations

{A}

There is a large amount of data that describes the effects of accelerations on specific body systems. Refer to the references cited in Figure 5.3.2.2.3-1 for detailed discussions.

Specific physiological effects	Reference number	Page number
a. Posture changes (also refer to Paragraph 3.3.1)	92	49–154
b. Mobility changes (also refer to Paragraph 3.3.2)	10	7–48
c. Vision changes (also refer to Paragraph 4.2)	36 92	525–527 155–160
d. Grayout and blackout	36 92	525 152
e. Reaction time (also refer to Paragraph 4.7)	36	525
f. Cardiovascular work	92 7	154,373-379 18
g. Vestibular effects (also refer to Paragraph 4.5)	10 86 92	7–64 to 7–95 35–45 387–389
h. Gas exchange	7 92	154, 373–389 35–45 387–389
i. Fluid pooling	7	17
j. Motion sickness	86 92	36–37 553

MSIS-48 REV. A

Figure 5.3.2.2.3-1. Sources of Data for Specific Physiological Effects of Linear Acceleration

5.3.2.3 Human Responses to Rotational Accelerations

{A}

Tolerance to rotational accelerations depends on the interaction of at least three factors: 1) center of rotation with respect to the body, 2) axis of rotation, and 3) the rotation rate.

Most subjects, without prior experience, can tolerate rotation rates up to 6 rpm in any axis or combination of axes.

Most subjects cannot initially tolerate rotation rates in the region of 12 to 30 rpm and rapidly become sick and disoriented above 6 rpm unless carefully prepared by a graduated program of exposure.

Rotation rates of 60 rpm for up to 3 or 4 minutes around the pitch axis (y-axis) and around the yaw axis (z-axis) have been described by subjects as being not only tolerable but pleasant.

Rotational rates at about 80 rpm in the pitch mode and at about 90-100 rpm in the yaw mode are intolerable.

In the pitch axis, with the center of rotation at the heart level, symptoms of backward acceleration (- G_x) are demonstrated at about 80 rpm and are tolerable for only a few seconds. Some effects of forward acceleration (+ G_x), namely numbness and pressure in the legs, are also observed but develop slowly, with pain being evident at about 90 rpm. No confusion or loss of consciousness is found, but in some subjects disorientation, headache, nausea, or mental depression are noted for several minutes after a few minutes of exposure.

With rotation in the yaw mode, when the head and trunk are inclined forward out of the z-axis, rotation becomes close to limiting at 60 rpm for 4 minutes, although, some motivated subjects have endured 90 rpm in the same mode. Except for unduly susceptible subjects, tolerance tends to improve with exposure.

Long-duration runs in the pitch mode have been endured up to about 60 minutes at 6 rpm in selected subjects.

Unconsciousness from circulatory effects alone occur after 3 to 10 seconds in the pitch mode at 160 rpm with the center of rotation at the heart and at 180 rpm with the center of rotation at the iliac crest.

Severe disorientation and performance degradation have been experienced by air and space crewmembers during random tumbles. Serious problems persist through the period of tumbling causing disorientation, reach and manipulative performance degradation ultimately interfering with the ability to make corrective actions.

It has been recommended that if rotation is used to create artificial gravity, the following general principles should be observed to minimize the effects of rotational acceleration on the human:

a. Radial traffic should be kept to a minimum.

b. The crewmembers should not traverse through the spin axis unless the hub is nonrotating.

c. The living and working areas should be located as far as possible from the axis of rotation.

d. The compartments should be oriented so that the primary traffic paths are parallel to the vehicle spin axis.

e. Workstation positions should be oriented so that, during normal activity, the lateral axis through the crewmember's ears is parallel to the spin axis. In conjunction with this, the controls and displays should be designed so that left/right heat rotations and up/down arm motions are minimized.

5.3.2.4 Human Responses to Impact Accelerations

{A}

Tolerance to impact and shock is usually based upon skeletal fracture levels. Damage to the vertebrae is most common. At higher levels of impact, injury to the head is the most frequent and severe manifestation.

There are two main factors which, when combined with the amplitude of acceleration, determine tolerance. These are 1) the time function, i.e., the total time of acceleration exposure and 2) the orientation of the subjects with respect to the direction of acceleration, primarily the relationship between the longitudinal (spinal) axis and the acceleration vector. For linear impact accelerations, those applied at right angles to the spinal axis are better tolerated than those applied parallel to this axis.

Figure 5.3.2.4-1 shows impact survival experience. It should be noted that numerous biophysical factors influence survival, so the "approximate survival limit" shown is only an estimate.

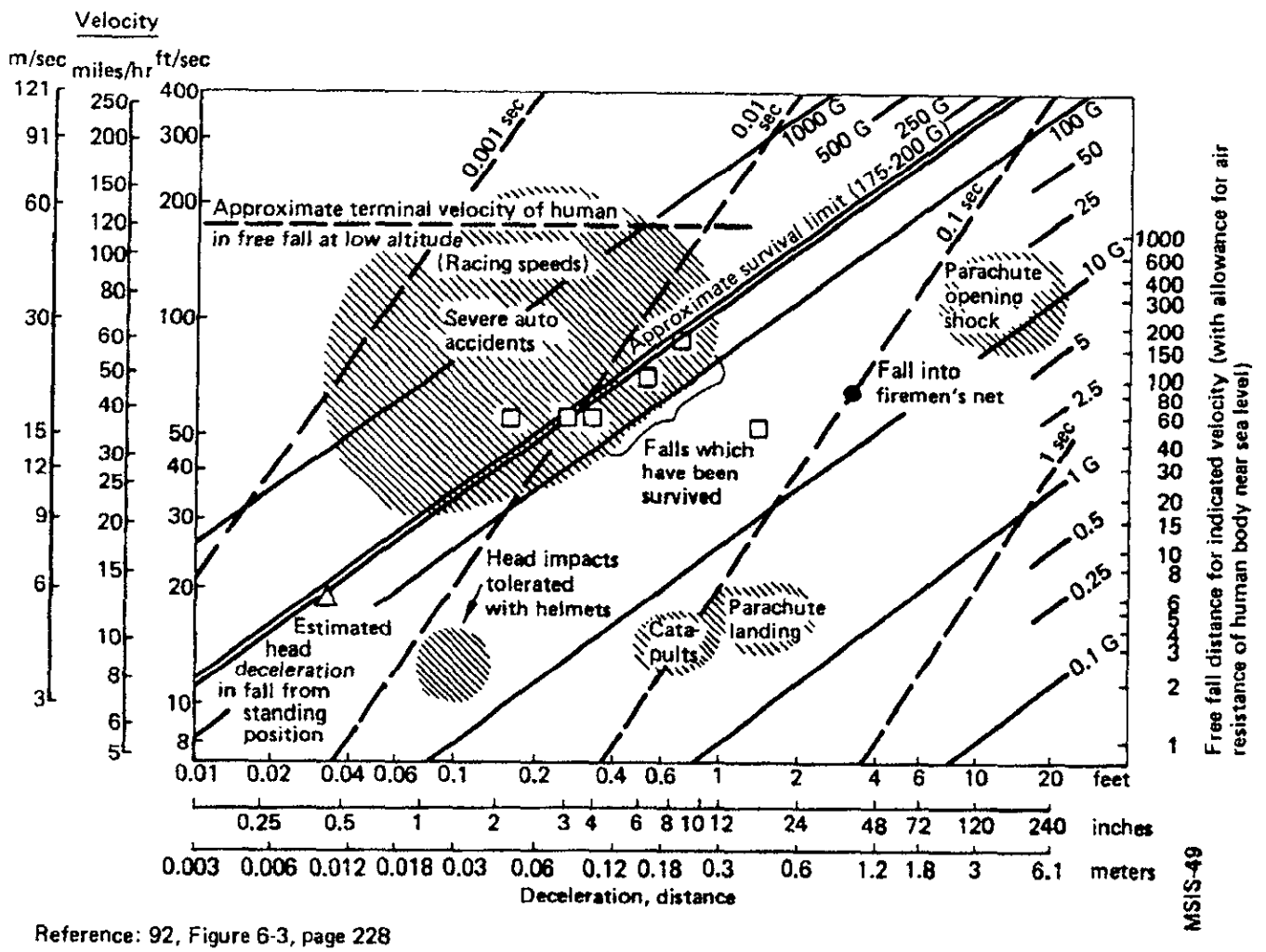

Reference: 92, Figure 6-3, page 228
407,408,409,417

Figure 5.3.2.4-1. Impact Survival Experience

5.3.3 Acceleration Design Requirements

{A}

5.3.3.1 Linear Acceleration Design Requirements

{A}

The following linear acceleration design requirements shall be observed:

a. Linear Acceleration Limits for Unconditioned and Suitably Restrained Crewmembers - The accelerations in any vector shall not exceed those magnitudes and durations specified in Figure 5.3.3.1-1.

b. Linear Acceleration Limits for Preconditioned and Suitably Restrained Crewmembers - Accelerations shall not exceed those magnitudes and durations specified in Figure 5.3.3.1-2.

(Refer to Paragraph 11.7.2.3.3.2, Body Restraint Loads, for seat belt and shoulder harness design loads.)

5.3.3.1.1 Entry Acceleration Design Requirements

{A}

The emergency vehicle shall be capable of limiting sustained entry acceleration to be no greater than 4G's in the +/- Gx direction, 1 G in the +/- Gy direction, and 0.5 G's in the +/- Gz direction.

5.3.3.2 Rotational Acceleration Design Requirements

{A}

The following rotational acceleration design requirements for rotation about the pitch axis shall be observed:

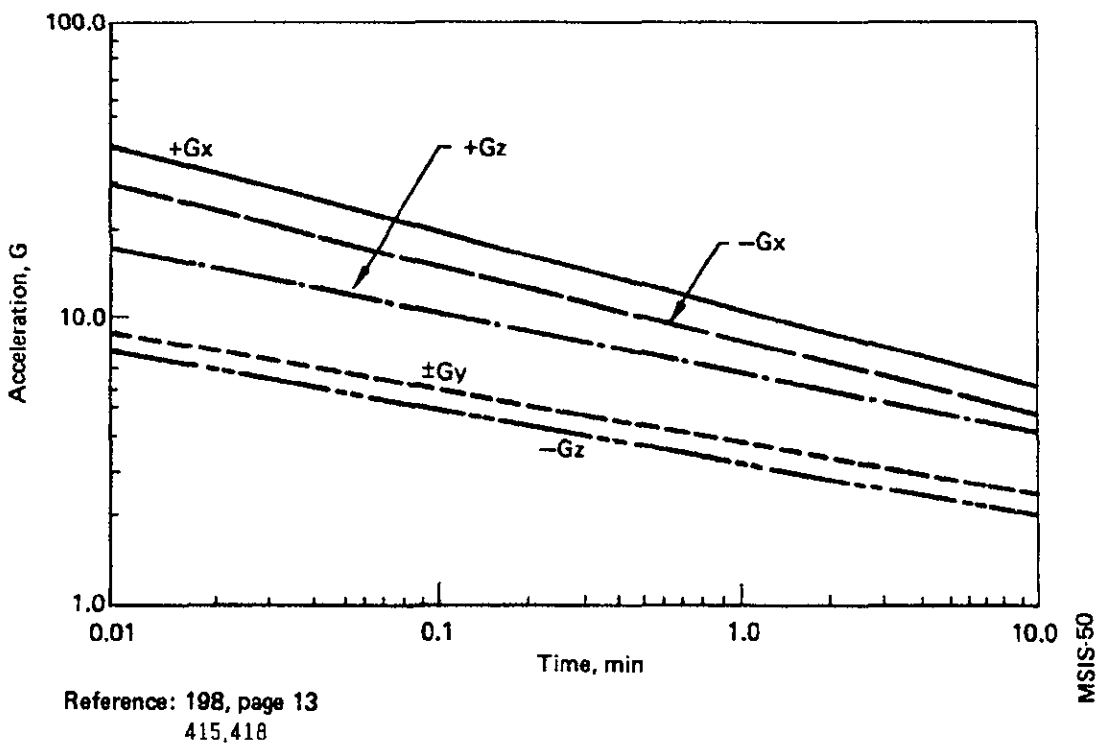

Reference: 198, page 13
415,418

Figure 5.3.3.1-1. Linear Acceleration Limits for Unconditioned and Suitably Restrained Crewmembers

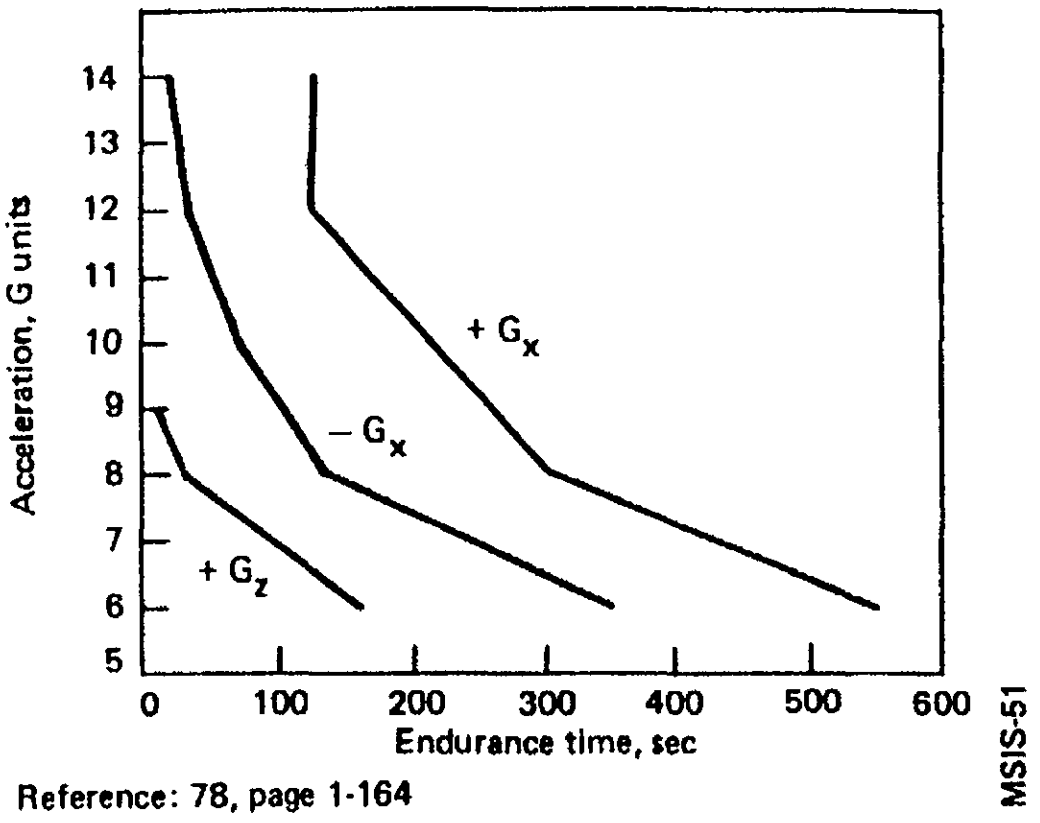

Reference: 78, page 1-164

Figure 5.3.3.1-2. Linear Acceleration Limits for Pre-Conditioned and Suitably Restrained Crewmembers

a. Rotational Acceleration Limits With Center of Rotation at the Heart - Accelerations shall not exceed the limits specified in Figure 5.3.3.2-1.

b. Rotational Acceleration Limits with a G Field Decaying from 35 to 15 G's - Accelerations shall not exceed the limits specified in Figure 5.3.3.2-2.

5.3.3.3 Impact Acceleration Design Requirements

{A}

Impact accelerations are those that occur over times of less than one second. Impact acceleration limits are as follows:

a. Impact Acceleration Limits - Impact forces shall not exceed those shown in Figure 5.3.3.3-1.

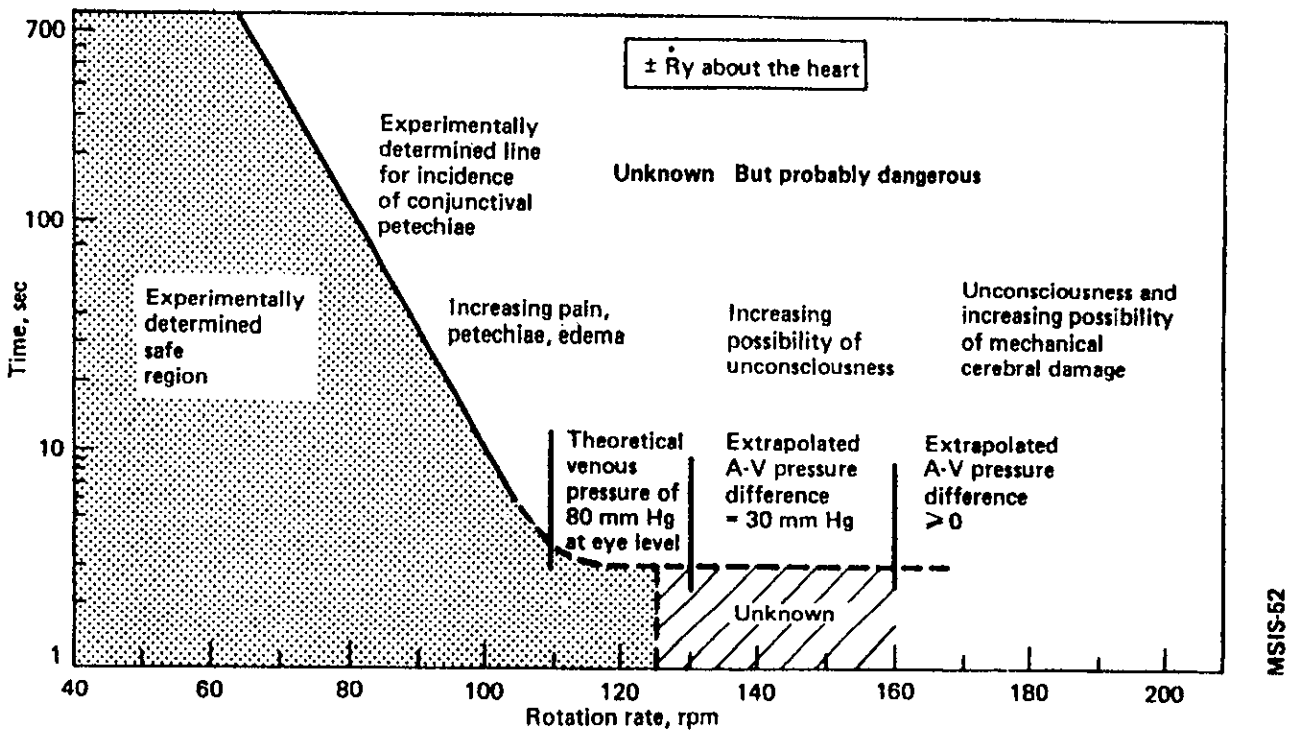

Reference: 78, page 1-187

Figure 5.3.3.2-1. Rotational Acceleration Limits for Rotation About the Pitch Axis With No Superimposed Deceleration Field With Center of Rotation at the Heart

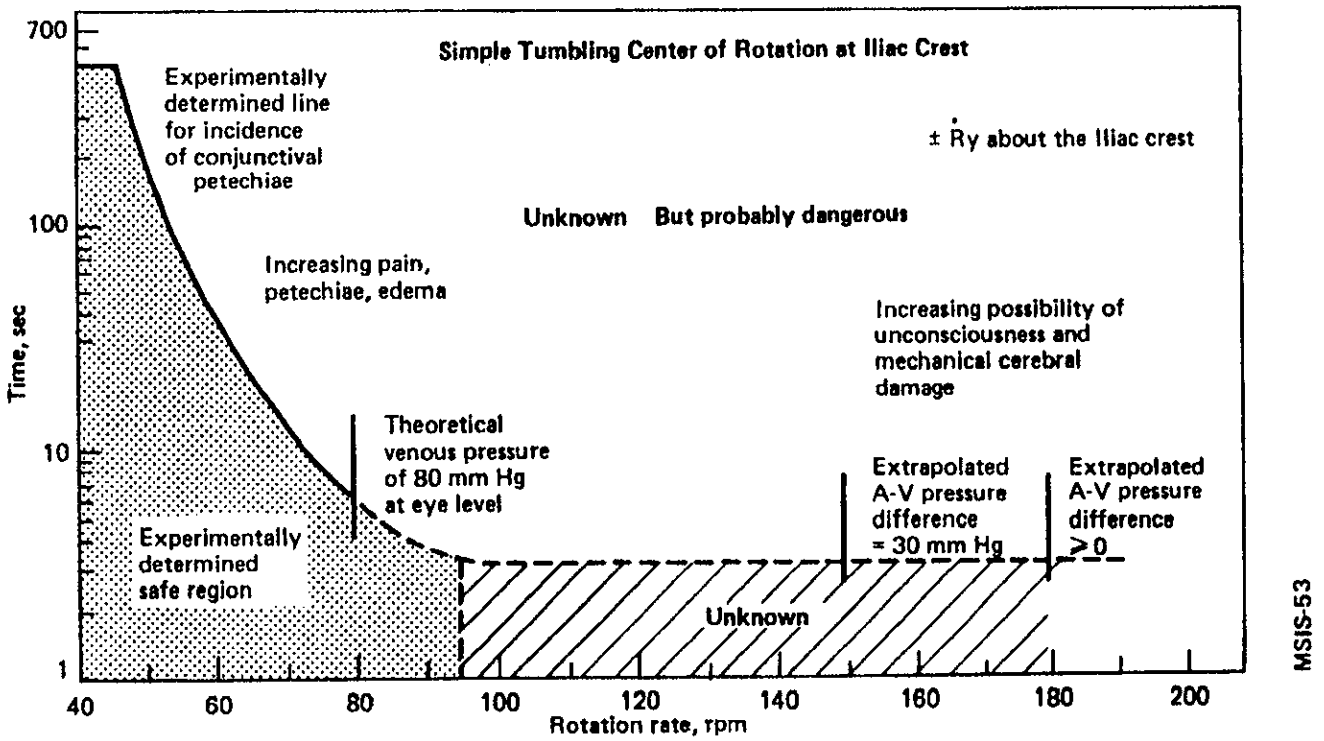

Reference: 78, Figure 9, page 1-187

Figure 5.3.3.2-2. Rotational Acceleration Limits for Rotation About the Pitch Axis With No Superimposed Deceleration Field With Center of Rotation at the Iliac Crest

(Duration of force < one second)		
Direction of impact acceleration	Impact limit	Rate of impact
$\pm G_x$	20 G	1,000 G/sec
$\pm G_y$	20 G	1,000 G/sec
$\pm G_z$	15 G	500 G/sec
45 deg off-axis (any axis)	20 G	1,000 G/sec

MSIS-54 REV. A

Reference: 198, Page 18

Figure 5.3.3.3-1. Impact Acceleration Design Limits

5.4 ACOUSTICS
{A}

5.4.1 Introduction
{A}

Acoustics is the science and technology of sound, including its production, transmission, and effects. Sound is generally used to refer to any vibration or passage of zones of compression and rarefaction through the air or any other physical medium which is sufficient to stimulate an auditory sensation. The primary concern here is with sound that arrives at the crewmember's ear via an airborne path.

This section establishes the appropriate noise level for manned spacecraft. Acoustic design requirements include general design goals, and noise exposure limits for working and living areas. Examples of typical acoustic design solutions are included. This section also discusses the potential sources of noise, propagation paths to the receiver, and human response to noise. (Refer to Paragraph 4.3, Auditory System, for related information.)

5.4.2 Acoustics Design Considerations
{A}

The acoustical design goals are to establish a satisfactory environment relative to the human response to noise, to prevent hearing loss, to minimize disruption of speech communications, and to minimize noise-induced annoyance/stress factors.

Launch/entry noise is categorized as short-term noise exposure. Orbiting (and flight) phase spacecraft noise limits are in the category of long-term exposure, where duration of exposure is a very important consideration.

Acoustic noises are pressure fluctuations in the atmosphere, measured with instruments displaying sound pressure levels in logarithmic units known as decibels (dB). The ear perceives sound pressure amplitudes with logarithmic sensitivity; therefore, it is more convenient to express sound pressure in terms of decibels.

The threshold of hearing in the frequency range of 1000 to 5000 Hz is about 20 uPascals (2.9×10^{-9} psi). The ear experiences pain when the sound pressure reaches about 200 Pascals (0.029 psi). The ratio of sound pressure between thresholds of hearing and pain at the ear is about 10^7. Sound pressure level in dB is a ratio between any two sound pressures where one sound pressure is a reference sound pressure, usually the threshold of hearing (20 uPascals). The definition of sound pressure level (SPL) is:

where "P" is the root-mean-square sound pressure in Pascals for the sound in question, and "P_o" is the reference sound pressure is 20×10^{-6} Pascals. The dynamic range of hearing is therefore:

Figure 5.4.2-1 shows the relationship of sound pressure level in decibels to sound pressure in Pascals. Some approximate SPLs for certain sounds and noises are indicated.

5.4.2.1 Acoustic Environments Design Considerations
{A}

Spacecraft crewmembers should be provided with an acoustic environment that will not cause injury or hearing loss, interfere with voice or any other communications, cause fatigue, or in any other way degrade overall man/machine system effectiveness.

A high noise level environment typically occurs during the launch (boost) phase. The primary concern is crewmember exposure that will cause hearing loss or interfere with intercom and radio voice transmission.

The on-orbit and flight phase of spacecraft missions is of relatively long duration. During work periods, the summation of the individual sound pressure levels from all operating systems and subsystems should not exceed exposure limits that will cause hearing loss or interfere with voice communication. Sleep

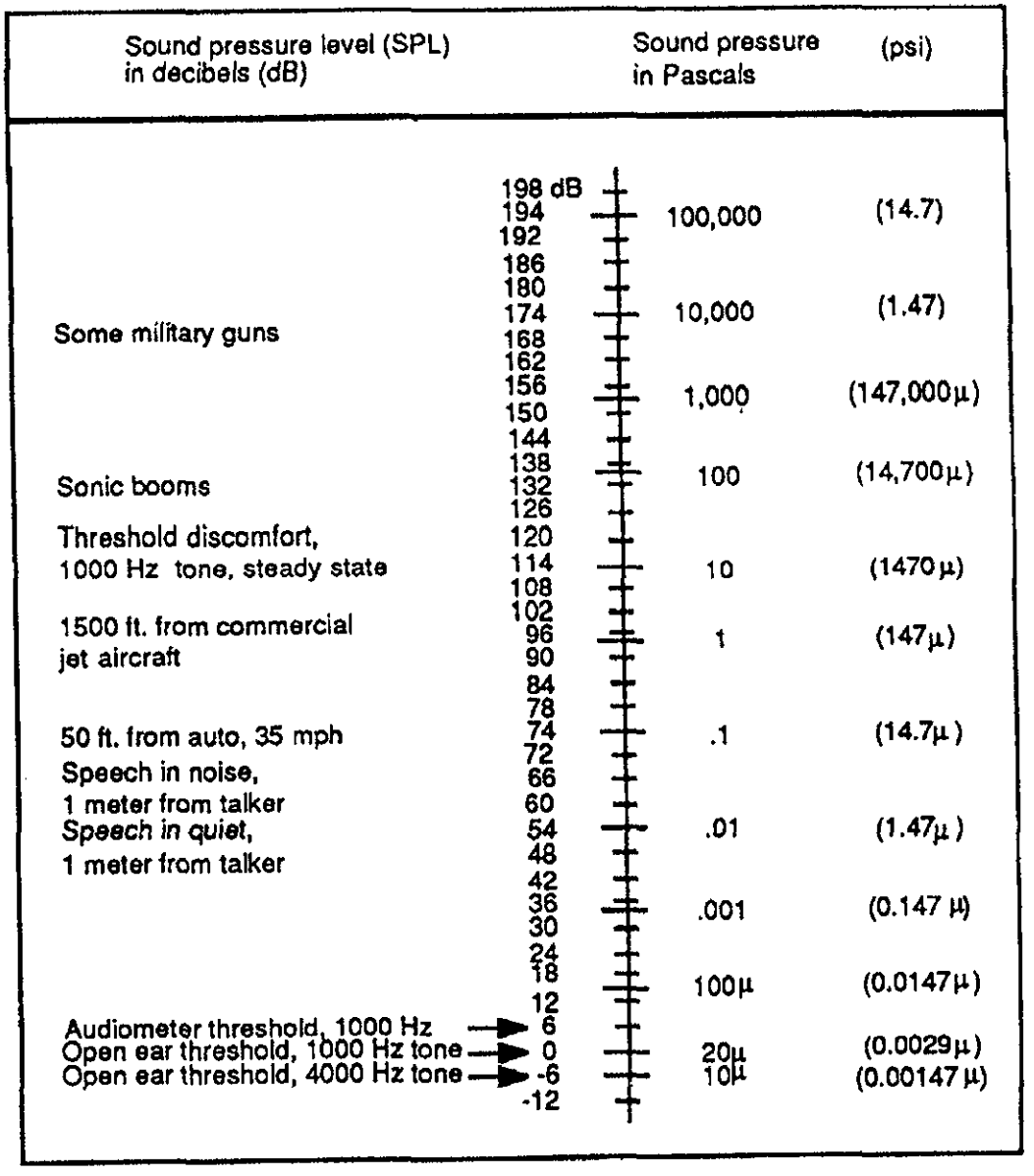

Reference: 223, Figure 2.2, Page 8

Note:

1. Sound pressure level in decibels (dB) $20 \log_{10}\left(\frac{P}{20\mu Pa}\right)$
2. Normal atmosphere is (0 deg C sea level) 1 bar = 14.7 lbs/in^2 = 2117 lbs/ft^2 = 10^5 Pascals = 10^6 dynes/cm^2 = 194 dB re 20μ Pa = 10^5 Newtons/m^2
3. Every doubling of the sound pressure causes an increase of 6 dB
4. A 1.41 increase in sound pressure causes an increase of 3 dB in sound pressure level and represents a doubling of sound energy
5. The SPL's given here are for linear frequency weighting

Figure 5.4.2-1. Sound Pressure Level (dB) as a Function of Pascals and PSI

and rest period noise levels should not exceed noise levels that interfere with sleep or comfort and the hearing of wanted sounds.

The entry phase is similar to the launch phase, because high-level noise typically occurs within the spacecraft for a relatively short time. Hearing loss and interference with intercom and radio voice transmission are of primary concern.

5.4.2.1.1 Launch Phase Acoustic Environment

{L}

The noise environment within the spacecraft during the launch phase is, initially, the result of high level jet noise of the booster rockets impinging on the outer surface of the fuselage and being transmitted to the spacecraft interior. As the spacecraft accelerates from its launch pad, noise reduces due to loss of ground reflection, and jet noise diminishes as velocity increases. With increasing velocity, however, the crew compartment receives aerodynamic noise generated by boundary layer turbulence along the outer surface of the fuselage. This boundary layer noise reaches its maximum level as the spacecraft passes through the range of maximum dynamic pressure and decreases progressively thereafter. Aerodynamic noise becomes insignificant approximately two minutes after liftoff.

Figure 5.4.2.1.1-1 shows Space Shuttle Orbiter noise, external and internal, of the crew module during the atmospheric launch phase. Crewmember exposure is less than the internal noise level because of the attenuation offered by helmets.

5.4.2.1.2 On-Orbit Phase Acoustic Environment

{O}

The flight and on-orbit acoustic environment within the spacecraft is composed of continuous (long-duration) and intermittent (short-duration) noises.

a. Typical continuous sources of on-orbit noise are:

1. Environmental control equipment, (e.g., motors, fans, pumps).

2. Avionics equipment (e.g., transformers, oscillators).

b. Typical intermittent sources of on-orbit noise are:

1. Waste control system pumps, fans, valves.

2. Galley fans.

3. Personal hygiene station pumps, fans, valves.

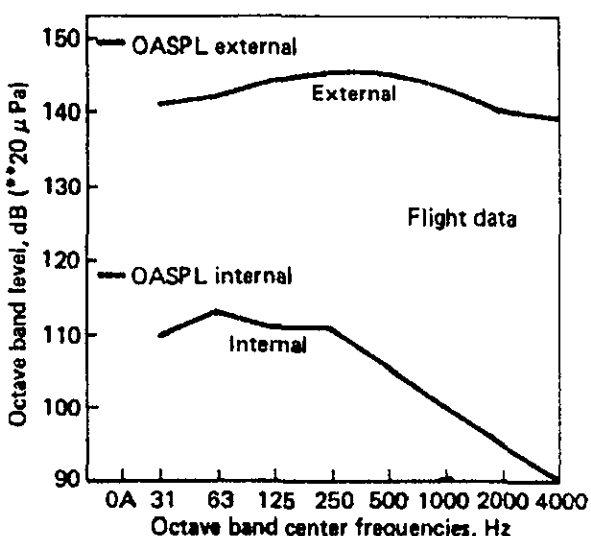

Note: OASPL = Overall Sound Pressure Level
Reference: 214, page 24

Figure 5.4.2.1.1-1. Space Shuttle Orbiter-Crew Module Noise Survey Launch Phase

MSIS-74 REV. A

4. Pressure regulators.

5. Thruster firings.

Figure 5.4.2.1.2-1 shows Space Shuttle Orbiter mid-deck and flight deck noise spectra during the on-orbit phase. Component noise spectra of individual prime noise sources are included.

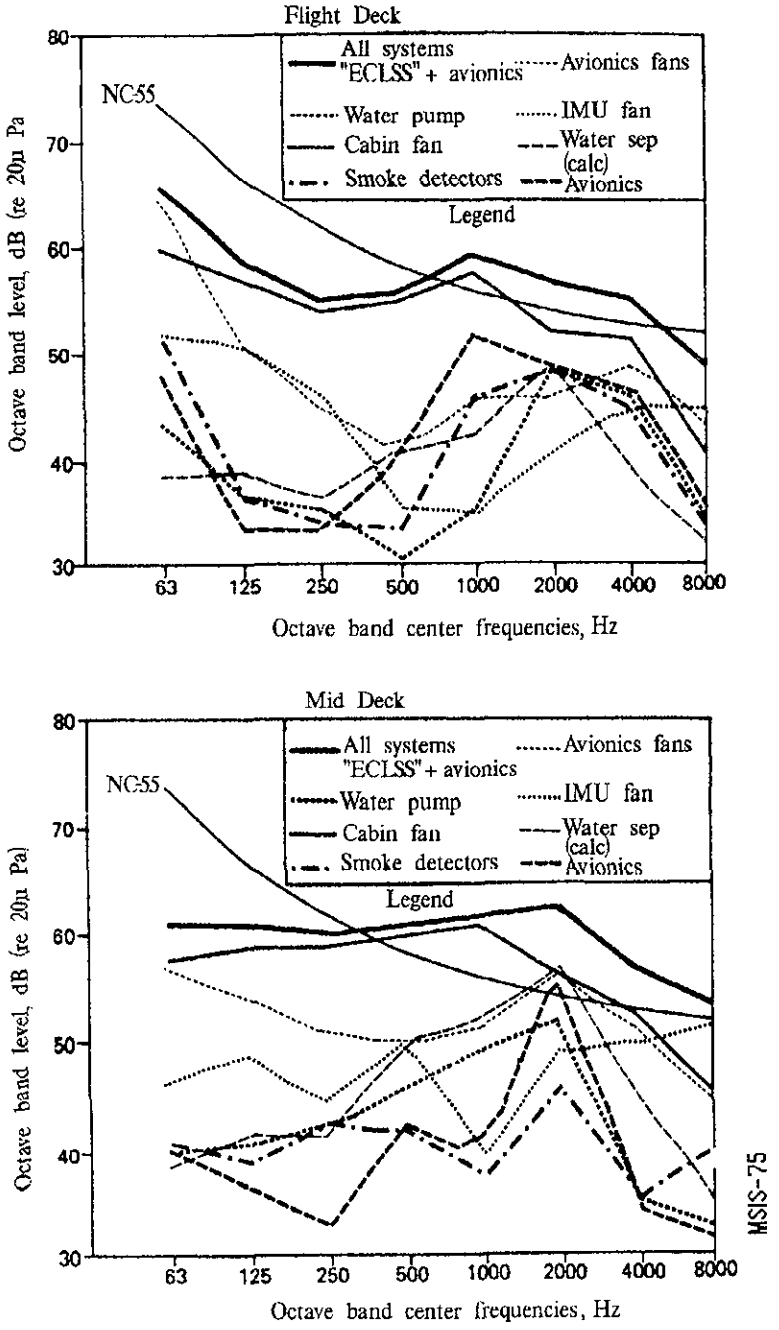

Reference: 214, page 65

Figure 5.4.2.1.2-1 Space Shuttle Orbiter On-Orbit Noise

5.4.2.1.3 Entry Phase Acoustic Environment

{L}

The noise environment within the spacecraft during the entry phase is dominated by boundary-layer turbulence containing broadband noise of high intensity. The sound pressure levels during entry are comparable with those produced during the maximum dynamic pressure at launch, but the high intensities may be maintained for a longer period of time during entry.

5.4.2.2 Propagation of Noise Design Considerations

{A}

Noise and vibration travel different paths to reach the ear. Airborne noise travels through the air ducts and other openings that exist in enclosures as well as directly between source and ear for exposed equipment. Noise emitted into equipment enclosures, such as the avionics and equipment bays, couples with the enclosure surfaces and reradiates into the crew module where the noise again reaches the ear through airborne transmission. Vibration generated by rotating motors, fans, pumps, and transformer oscillations travel through the structural support members and is finally radiated as sound from vibrating surfaces in the crew module. The amount of noise reaching the receiver is dependent on the source level and the degree to which the transmission paths reduce the disturbances due to various attenuation factors encountered along the way.

The structure-borne acoustic noise loss factors will change between terrestrial gravity and one-atmosphere conditions to on-orbit microgravity and no-atmosphere conditions. The effect on infrasonic and low frequency noise in a spacecraft is especially significant, because propagation of low-frequency energy through the spacecraft pressure hull into the vacuum of outer space cannot occur.

5.4.2.3 Human Responses to Noise Design Considerations

{A}

The most significant effects of noise and transient pressures on humans are damage to hearing, masking of speech and warning signals, and annoyance. In addition, noise interferes with some human sensory and perceptual capabilities and thereby may degrade critical task performance. Noise may also produce temporary or permanent alterations in body chemistry.

The effects of noise on human responses can be categorized as follows:

a. Physiological effects - nonauditory responses.

b. Performance effects - masking.

c. Annoyance - perceived noisiness, and sleep interference.

d. Fatigue - Resulting from attempting to speak over elevated noise levels.

Recommended references on human responses to noise are References 10, 92, and 223.

5.4.2.3.1 Physiological Effects of Noise

{A}

Exposure to intense sound may result in temporary and/or permanent hearing loss. The severity of the loss is dependent upon the duration of exposure, the physical characteristics of the sound (intensity, frequency, pure or wide-band), and the nature of the exposure (continuous or intermittent).

For various exposure times to a given amount of acoustic energy, continuous noise causes greater temporary hearing loss for unprotected ears than does impulse noise.

Figure 5.4.2.3.1-1 lists many of the physiological effects of noise for various conditions of exposure.

Reported disturbances	Condition of exposure		
	SPL (dB) re: 20 μ Pa	Spectrum	Duration
Reduced visual acuity; chest wall vibrations; gag sensations; respiratory rhythm changes.	150	1-100 Hz	2 min
Reflex response of tensing, grimacing, covering the ears, and urge to avoid or escape	100		Sudden onset
Pain in the ears	135	20-2,000 Hz	
Pain in the ears	160	3 Hz	
Discomfort in the ear	120	300-9,600 Hz	2 sec
Hearing TTS of 10 dB	94	4000 Hz	15 min
Hearing TTS of 10 dB	100	4000 Hz	7 min
Hearing TTS of 10 dB	106	4000 Hz	4 min
Tympanic membrane rupture	155	2,000 Hz	Cont.
Tympanic membrane rupture	175	low freq.	blast
Mechanical vibrations of body felt; disturbing sensations	120-150	OASPL	
Vertigo and, occasionally, disorientation, nausea and vomiting	120-150	1.6 To 4.4 Hz	Cont.
Irritability and fatigue	120	OASPL	
TTS occurs	65	Broadband	60 days
Human lethality	167	2000 Hz	5 min
Human lethality	161	2000 Hz	45 min
TTS occurs	75	8 to 16 kHz	
TTS occurs	110	20 to 31.5 kHz	

TTS — Temporary Threshold Shift
SPL — Sound Pressure Level re: 20 μPa

Reference: 10, Pages 9-40, 41, 43, 47, 48
15, Page 381
92, Pages 719, 733, 738

MSIS-76

Figure 5.4.2.3.1-1. Physiological Effects of Noise

Other observed physiological effects of noise are:

a. Noise exposure causes increases in the concentration of corticosteroids in the blood and brain and affects the size of the adrenal cortex. Continued exposure is also correlated with changes in the liver and kidneys and with the production of gastrointestinal ulcers.

b. Electrolytic imbalances (magnesium, potassium, sodium, and calcium) and changes in blood glucose level are associated with noise exposure.

c. The possibility of effects on sex-hormone secretion and thyroid activity is indicated.

d. Vasoconstriction, fluctuations in blood pressure, and cardiac muscle changes have been reported. Vasoconstriction in the extremities, with concomitant changes in blood pressure, have been found for noises of 70 dB SPL, and these effects become progressively worse with higher levels of exposure.

e. Abnormal heart rhythms have been associated with occupational noise exposure; this and other evidence support the tentative conclusion that noise may cause cardiovascular disorders.

f. High intensity sound changes the mode of the stapes (in the middle ear), reducing the stimulus to the cochlea. An additional protective mechanism causes the stapedius and tensor tympana muscles to contract, which stiffens the middle ear ossicular chain. This reflex occurs about 10 m sec. after the initial onset of loud noise.

5.4.2.3.2 Performance Effects of Noise

{A}

Masking of speech occurs when the presence of one sound, such as noise, inhibits the perception of another sound. Hence, a given frequency will mask signals at neighboring frequencies rendering them completely inaudible.

Crewmember's efficiency is impaired when noise interferes with voice communications. The frequencies used for voice communication range from about 200 to 6000 Hz. When this occurs, the penalty is an increase in time required to accomplish communication through slower, more deliberate verbal exchanges. This results in increased possibilities of human error due to misunderstandings. Crewmember's communication limitations must be considered an integral part of the system in which they perform (see Figure 5.4.2.3.2-1).

The sound reflected from room surfaces is known as reverberation. If the delay relative to the original sound is small, the reflections and the original will fuse and be heard singly by the listener. If the delay is long, a separate sound (an echo) will be heard.

If the reverberation time is long, the room is termed "live" and a spoken word is heard first directly and then as a series of reflections. A certain amount of reverberation is desirable because it makes speech sound alive and natural. Too much reverberation is undesirable because reflections arrive at the same time as a subsequent word and interfere with its perception.

If the reverberation time is short, the room is termed "dead". There is less interference between words but, because the sound of the word decays before it can propagate through the room, communication may be reduced.

Speech interference level (dB)	Person to person communication
30 - 40	Communication in normal voice satisfactory
40 - 50	Communication satisfactory in normal voice 1 to 2m (3 to 6ft), and raised voice 2 to 4m (6 to 12ft), telephone use satisfactory to slightly difficult
50 - 60	Communication satisfactory in normal voice 30 to 60cm (1 to 2ft), raised voice 1 to 2m (3 to 6ft), telephone use slightly difficult.
60 - 70	Communication with raised voice satisfactory 30 to 60 cm (1 to2ft) slightly difficult 1 to 2m (3 to 6ft), telephone use difficult. Ear plugs and/or ear muffs can be worn with no adverse effects on communications.
70 - 80	Communication slightly difficult with raised voice 30 to 60 cm (1 to 2ft), slightly difficult with shouting 1 to 2m (3 to 6ft). Telephone use very difficult. Ear plugs and/or ear muffs can be worn with no adverse effects on communication.
80 - 85	Communication slightly difficult with shouting 30 to 60cm (1 to 2ft). Telephone use unsatisfactory. Ear plugs and/or ear muffs can be worn with no adverse effects on communication.
Overall speech level (dB) minus SIL (dB)*	Communications via earphones or loudspeaker
+ 10 dB or greater	Communication satisfactory over range of SIL 30 maximum**SIL**permitted by exposure time.
+ 5dB	Communication slightly difficult. About 90 percent of sentences are correctly heard over range of SIL 30 to maximum SIL permitted by exposure time.
0 dB to - 10 dB	Special vocabularies (i.e., radio-telephone voice procedures) required. Communication difficult to completely unsatisfactory over range of SIL 30 to maximum SIL permitted by exposure time.

* The overall long-time RMS sound pressure level of speech and the SIL for the noise must be measured at or estimated for a position in the ear canal of the listener. The long-time RMS value of speech can be approximated by subtracting 4 dB from the peak VU meter readings on monosyllabic words.

** Ear plugs and /or muffs worn in noise having SIL's above 60 dB will not adversely affect communication and will extend maximum permissible SIL in accordance with protection provided.

MSIS 77

Reference: 5, Table XXIX, Page 279

Figure 5.4.2.3.2-1 Speech Interference Level (SIL) Criteria for Voice Communications

Figure 5.4.2.3.2-2 lists many of the performance effects of noise on humans as a condition of exposure. Other observed performance effects of noise are:

Performance effects	Conditions of exposure		
	SPL (dB) re: 20μPa	Spectrum	Duration
Reduced ability to balance on a thin rail	120	Broadband	
Chronic fatigue	110	Machinery noise	8 hr
Reduced visual acuity, stereoscopic acuity, near-point accomodation	105	Aircraft engine noise	
Vigilance decrement; altered thought processes; interference with mental work	90	Broadband	Continuous
Fatigue, nausea, headache	85	1/3-octave @ 16 kHz	Continuous
Degraded astronauts' performance	75	Background noise in spacecraft	10-30 days
Performance degradation of multiple-choice, serial-reaction tasks	90	Broadband	
Overloading of hearing due to loud speech	100	Speech	
Affects person-to-person voice communication	See Fig. 5.4.2.3.2-1.		
Hearing TTS at 2 minutes	70	4000 Hz	
Hearing TTS at 2 minutes after exposure	155		8 hr 100 impulses

TTS at 2 minutes (**TTS_2**)

Reference: 5, Page 279
10, Pages 9-49, 50
15, Page 381
92, Page 725
223, Pages 239, 249

MSIS-78

Figure 5.4.2.3.2-2. Performance Effects of Noise on Humans

a. Continuous regular periodic and aperiodic noise reduces performance on a complex visual tracking task. At levels of 50, 70 and 90 dB of white noise, the greatest decrement occurred with the highest noise level.

b. As the noise intensity increases, increased arousal causes an improvement in task performance up to a point; beyond that level of intensity, over arousal sufficient to degrade task performance occurs.

c. Psychological effects of noise can include anxiety, learned helplessness, degraded task performance, narrowed attention, and/or other adverse after effects.

5.4.2.3.3 Annoyance Effects of Noise

{A}

The term "annoyance" refers to the degree noise is perceived to be unwanted, objectionable, or unacceptable. High noise levels can delay the onset of sleep, awaken one from sleep, and interfere with rest and with the hearing of wanted sounds. In the presence of objectionable noise levels, long path transmission voice communications cannot be tolerated as easily. Noise is stressful when it creates feelings of emotion, i.e., surprise, fear, anger, frustration, etc. Noise is annoying when it begins to interfere with low-level conversational speech (especially intermittent noise), becoming noticeable at 50 dB(A). The threshold for noise annoyance varies depending on the sensitivity and mental state of the individual.

5.4.2.4 Noise Exposure Limits Considerations

{A}

Spacecraft crewmember noise exposure limits are established by criteria for:

a. Hearing conservation.

b. Communication requirements.

c. Habitability requirements.

The types of noise that need to be considered are steady state noise (22.4 to 11,200 H_Z), and impulse noise.

Infrasonic and ultrasonic noise, though beyond the range of hearing, have a physiological effect on humans and should be considered. The duration of noise exposure directly affects permissible noise limits and should be considered. Also, noise criteria limits should be applied which enable certain tasks to be performed without degradation.

5.4.2.4.1 Hearing Conservation Criteria Considerations

{A}

Hearing conservation criteria have been established which, when exceeded, are indications for the employment of hearing conservation measures. Hearing conservation criteria are based on comprehensive statements of the relation between various descriptive parameters of the noise exposure, such as sound pressure level and exposure time, and the probability of temporary or permanent hearing loss. Material design standards evolve from consideration of hearing damage risk, speech intelligibility, and annoyance factors intended to cover typical operational conditions.

5.4.2.4.1.1 Long-Term Hearing Conservation Criteria Considerations

{A}

Long-term noise may be continuous, intermittent or fluctuating, with the sound pressure level varying over a wide range, provided such variations have a duration exceeding one second.

5.4.2.4.1.1.1 Wide-Band, Long-Term Hearing Conservation Considerations

{A}

Wide-band or continuous sound is the spectrum of a wave whose components are continuously distributed over a frequency region. Audio frequencies range from approximately 15 to 20,000 Hz.

The equivalent continuous noise level (L_{eq}) is the constant sound level that is equivalent to a varying sound level during a specified sample time. Implicit in this equivalence is an exchange rate between sound level and time of 5 dB per doubling of time. [See Reference 58, Paragraph 3.5, for method of calculating L_{eq}].

Audible noise with constant sound levels of 85 dB(A) or greater is considered hazardous regardless of the duration of exposure. Hearing protection devices need to be provided during exposure to conditions of exposure to noise levels of 85 dB(A) or greater. Crewmembers should not be exposed to continuous noise levels which exceed 120 dB in any octave band or 135 dB overall sound pressure level (PASPL) under any circumstances.

5.4.2.4.1.1.2 Narrow-Band, Long-Term Hearing Conservation Considerations

{A}

If the sound pressure level of any one-third octave band exceeds the level in the adjacent one-third octave bands by 5 dB or more, that band and associated octave band shall be considered to contain pure tone or narrow-band components. Narrow-band noise is a simple or complex tone or line spectra having intense and steady state frequency components, relative to wideband noise components, in a very narrow band (1% of the octave band or 5 Hz, whichever is less) and is heard as a musical sound, either harmonic or discordant.

5.4.2.4.1.2 Short-Term Hearing Conservation Criteria Considerations

{A}

Short-term noise exposure is that period required for spacecraft launch and boost phase, the entry phase, and other conditions normally not exceeding five minutes continuous duration.

Also, impulse or impact noise that may occur during any phase of spacecraft operation is considered to be short-term noise exposure.

5.4.2.4.2 Voice Communications Criteria Considerations

{A}

Intelligibility is the psychological process of understanding meaningful words, phrases, and sentences that may occur face-to-face or over communication systems. For satisfactory communication of most voice messages in noise, 75% intelligibility is required. The ratio of speech level to background noise level affects intelligibility.

5.4.2.4.2.1 Direct Voice Communications Criteria Considerations

{A}

Direct (face-to-face) communication provides visual cues that enhance voice communication intelligibility in the presence of background noise. The distance from speaker to listener, background noise level, and voice level are important considerations. Ambient air pressure and gaseous composition of the air are important considerations, because they affect voice efficiency and frequency content.

5.4.2.4.2.2 Indirect Voice Communications Criteria Considerations

{A}

Indirect voice communication systems lack visual cues that aid in speech intelligibility. The Articulation Index, **(AI)** should be used to calculate speech intelligibility in voice communication situations other than face-to-face. Standards for calculating the AI are described in Reference 222. The relationship between AI and various measures of speech intelligibility criteria are shown in Figure 5.4.2.4.2.2-1. Articulation Index criteria is given in paragraph 5.4.3.2.2.2.

5.4.2.4.3 Annoyance Criteria Considerations

{A}

Problems of annoyance and task disruption will be minimal if acoustic requirements for acceptable speech communication, sleep, and rest are met.

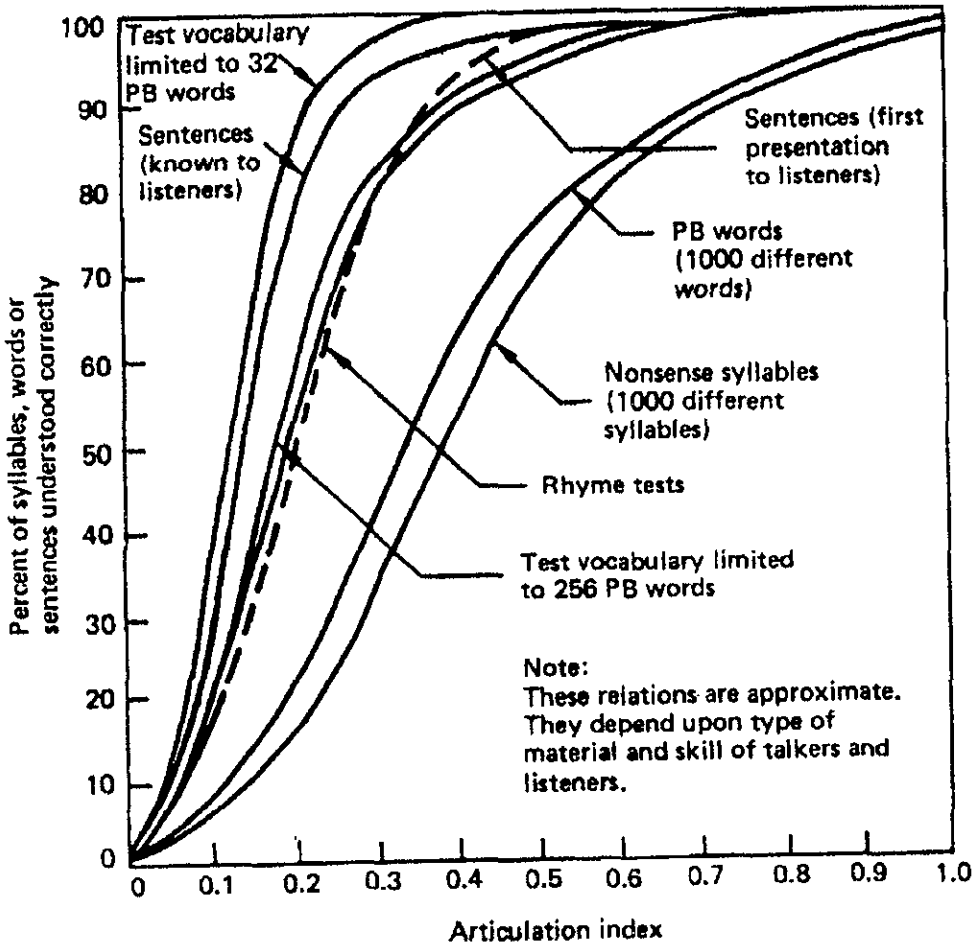

Reference: 19, Sub 1.4 (1), page 1.9

PB - Phonetically Balanced

(See Paragraph 5.4.3.2.2.2 for AI Criteria)

MSIS-79

Figure 5.4.2.4.2.2-1 Articulation Index and Speech Intelligibility

5.4.2.4.3.1 Long-Term Annoyance Noise Criteria Considerations

{A}

Long-term noises that can cause annoyances affecting sleep and rest periods and the hearing of wanted sounds are broad-band random noise or narrow-band noise with tone components. Long-term noise may be continuous, intermittent, or fluctuating, provided that such variations have a duration exceeding one second. Inaudible infrasonic and ultrasonic noise frequencies can also produce annoying effects.

5.4.2.4.3.2 Short-Term Annoyance Noise Criteria Considerations

{A}

Short-term annoyance noise exposure does not exceed five minutes continuous duration. This includes wide-band random noise, narrow-band noise or tones, impulse or impact noise, and intermittent noise.

5.4.3 Acoustics Design Requirements

{A}

This section defines the basic environmental limitations and criteria that the designer shall apply to the design of crew stations and other habitable compartment areas.

Noise levels shall be specified in terms of A-weighted sound level, L(A). Noise exposure over 24 hour periods shall be specified in terms of the equivalent A-weighted sound level La eq. The maximum allowable on orbit continuous broad band sound pressure exposure limits produced by the summation of all individual sound pressures from all sources, including all operating systems, subsystems and payloads, considered over a 24 hour period are defined in the following paragraphs.

5.4.3.1 General Acoustic Design Requirements

{A}

The following general acoustic design requirements shall be observed:

a. General Acoustic Design - Noise generation and penetration shall be controlled to the extent that acoustic energy will not cause personnel injury, interfere with voice or any other communications, induce fatigue, or contribute to the degradation of overall man-machine effectiveness.

(All sound pressure levels in decibels are referenced to 20 u-Pascals unless otherwise stated and are to be measured at or translated to the outer ears of crewmembers.)

b. Equipment Noise :

1.Equipment shall be designed to meet noise requirements of MIL-STD-1474B.

2. All noisy equipment shall be mounted and located to reduce noise at crewmember stations.

3. System designs shall include noise control provisions.

4. Means shall be provided on-board to facilitate measurement of acoustic noise levels to verify that exposure limits are not being exceeded.

5.4.3.2 Noise Exposure Requirements

{A}

The following types of noise shall be taken into account:

a. Wide-band random noise (22.4 to 11,200 Hz).

b. Narrow-band noise and tones.

c. Impulse noise.

d. Infrasonic and ultrasonic noise.

There are three sets of noise requirements that shall be satisfied depending on crewmember task and acceleration regimes: 1) hearing conservation, 2) voice communication, and 3) annoyance.

5.4.3.2.1 Hearing Conservation Noise Exposure Requirements

{A}

a. Maximum Noise Exposure - A maximum noise exposure of 115 dB(A) is allowable, providing the duration does not exceed two minutes during a 24-hour period.

b. Hearing Protection Devices - Hearing protection devices shall be provided for use during exposure to noise levels of 85 dB(A) or greater.

5.4.3.2.1.1 Wide-Band, Long-Term Hearing Conservation Noise Exposure Requirements

{A}

The following long-term, wide-band hearing conservation noise exposure criteria shall apply:

a. Hazard Level - Noise of constant sound levels of 85 dB(A) and greater are considered hazardous regardless of the duration of exposure. Total exposure during a 24-hour period shall not exceed an average of 80dB(A).

b. Allowable Noise Exposure - A noise exposure below 84 dB(A) for up to eight hours duration without hearing protection is allowable but not desirable.

c. Unacceptable Noise Levels - Crewmembers shall not be exposed to continuous noise levels that exceed 120 dB in any octave band or 135 dB OASPL under any circumstances.

5.4.3.2.1.2 Narrow-Band, Long-Term Hearing Conservation Noise Exposure Requirements

{A}

The relative sound pressure levels of narrow-band components, pure-tones, and beat frequencies shall be limited to a level at least 10 dB lower than the allowed maximum sound pressure level of the octave-band that contains the component.

5.4.3.2.1.3 Impulse Hearing Conservation Noise Exposure Requirements

{A}

Maximum Noise Level (Hearing Conservation Criteria) - Impulse sound is a change in sound pressure level of more than 10 dB in one second or less. Impulse noise shall not exceed 140 dB peak pressure level to meet hearing conservation criteria for unprotected ears.

(See MIL-STD-1474B (Ref. 58) regarding the relationship between the number of daily exposures, the corresponding peak levels, B-duration values, and the required hearing protection devices when impulse peak pressure levels exceed 140 dB.)

5.4.3.2.1.4 Infrasonic, Long-Term Annoyance Noise Exposure Requirements

{A}

The following infrasonic noise annoyance criteria shall apply:

a. Infrasound Sound Pressure Level - Infrasound sound pressure level shall be less than 120 dB in the frequency range of 1 to 16 Hz for 24-hour exposure.

b. Hearing Protection - Passive hearing protection devices shall not be a method for low-frequency infrasound noise control.

5.4.3.2.1.5 Ultrasonic, Long-Term Annoyance Noise Exposure Requirements

{A}

The following ultrasonic noise annoyance criteria shall apply:

a. Hearing Conservation Measures - Hearing conservation measures shall be initiated when the ultrasonic criteria provided in Figure 5.4.3.2.1.5-1 are exceeded.

b. Hearing Protection - Ultrasonic noise hearing protection shall be provided where overexposure is possible and in such a way that communication is not hampered.

One-third octave band center frequency, kHz	One-third octave band level in dB
10	80
12.5	80
16	80
20	105
25	110
31.5	115
40	115

MSIS 401

Reference: 281, Page 1-3

Figure 5.4.3.2.1.5-1. Airborne High Frequency and Ultrasonic Hazard Noise Limits

5.4.3.2.2 Voice Communication Noise Exposure Requirements

{A}

5.4.3.2.2.1 Direct Voice Communications Noise Exposure Requirements

{A}

The following noise level criteria shall apply to areas where voice communications are necessary:

a. Voice Communication Criteria - The communication criteria shown in Figure 5.4.3.2.2.1-1 shall be used to define maximum noise level based on voice communication requirements.

b. Background Noise Level - Background noise for work areas shall not exceed the NC 50 contour unless otherwise specified. (Refer to Figure 5.4.3.2.3.1-1).

c. Room reverberation time -

1. The reverberation time of a spacecraft compartment shall be adjusted according to room volume and the criterion for conversational speech as shown in Figure 5.4.3.2.2.1-2.

2. In areas where crewmember display users must communicate by voice, provide a room reverberation time of approximately 0.5 seconds.

3. Reverberation time shall be verified utilizing the natural frequency of the system.

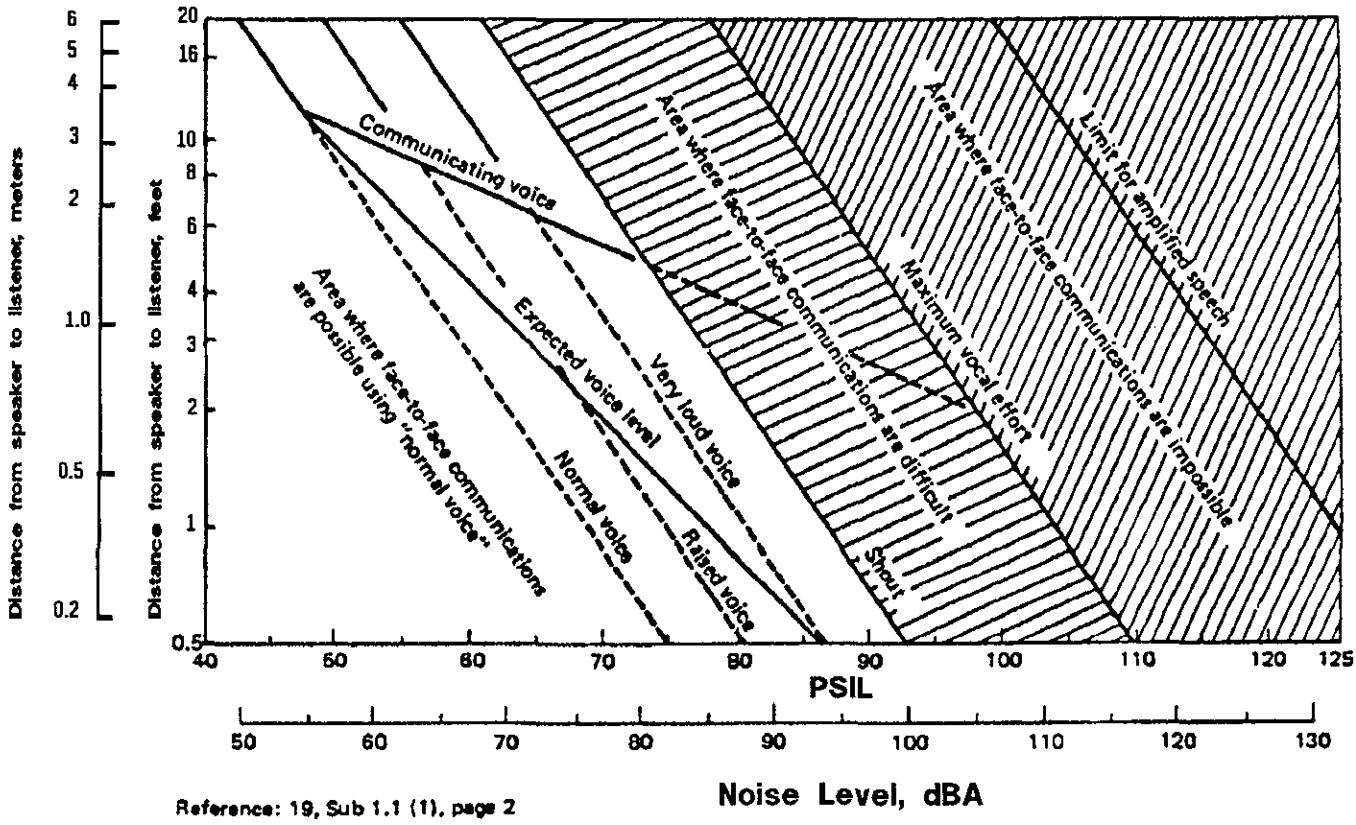

Reference: 19, Sub 1.1 (1), page 2

MSIS-81

Figure 5.4.3.2.2.1-1 PSIL and Effective Voice

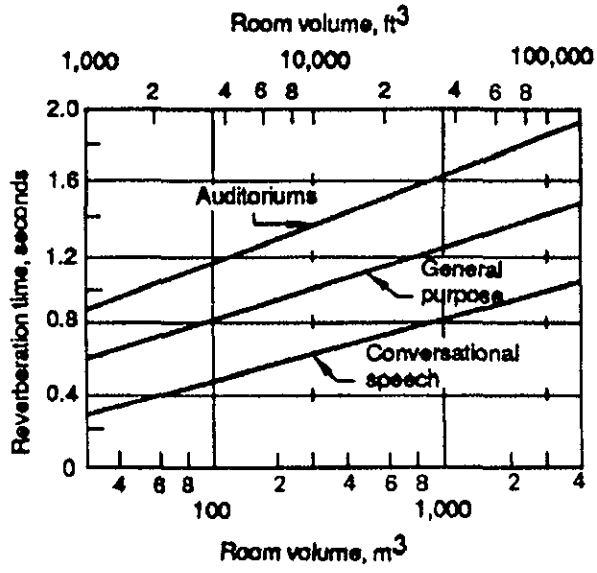

Reference: 4, Figure 6.6-12, page 6.6-17

MSIS-82

Figure 5.4.3.2.2.1-2. Preferred Reverberation Time

5.4.3.2.2.2 Indirect Voice Communications Noise Exposure Requirements

{A}

The following intelligibility criteria for Articulation Index (AI) shall apply:

a. Very Good to Excellent Intelligibility - AI = 0.7 to 1.0.

b. Good Intelligibility - AI = 0.5 to 0.7.

c. Generally Acceptable Intelligibility - AI = 0.3 to 0.5.

d. Unsatisfactory or Only Marginally Satisfactory - AI = 0.0 to 0.3.

Reference Figure 5.4.2.4.2.2-1.

5.4.3.2.3 Annoyance Noise Exposure Requirements

{A}

5.4.3.2.3.1 Wide-Band, Long-Term Annoyance Noise Exposure Requirements

{A}

The following long-term, wide-band annoyance noise criteria shall apply:

a. Maximum Continuous Noise - The maximum allowable continuous broad band sound pressure levels produced by the summation of all the individual sound pressure levels from all operating systems and subsystems considered at a given time shall not exceed the Noise Criteria (NC) 50 contour for work periods and the NC 40 contour for sleep compartments shown in Figure

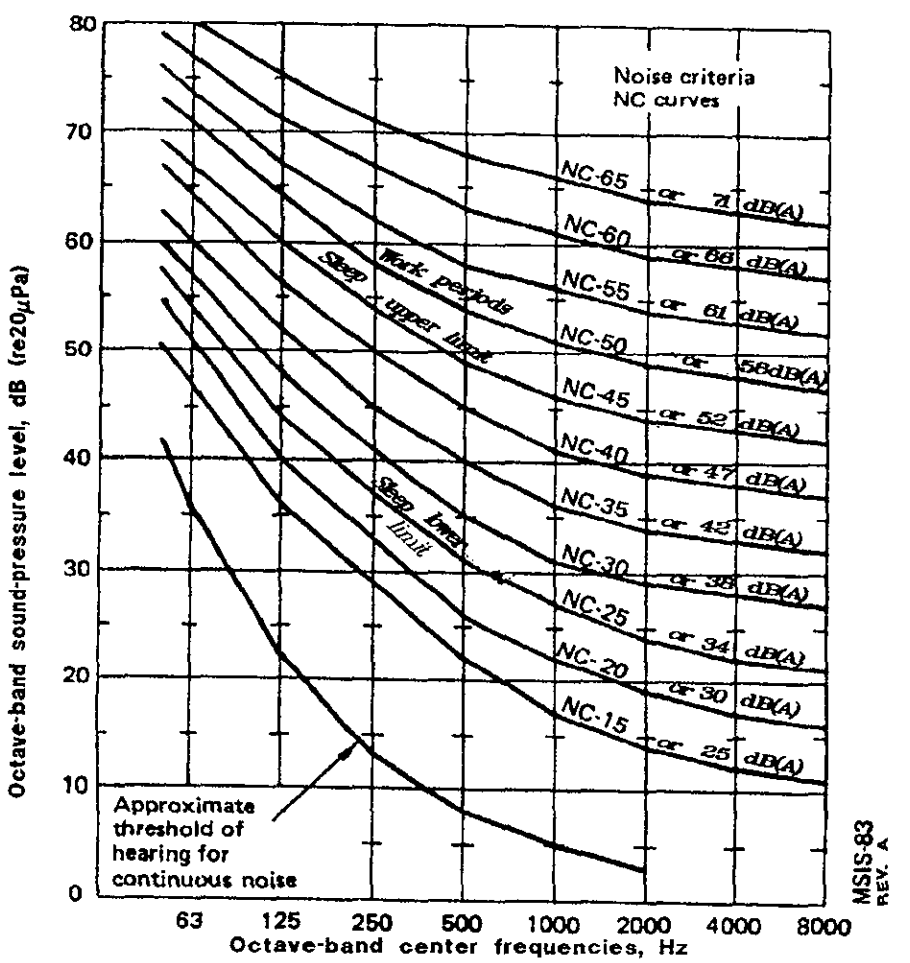

Reference: 90, page 6

Figure 5.4.3.2.3.1-1 Indoor Noise Criteria (NC) Curves

5.4.3.2.3.1-1. Also see Figure 5.4.3.2.3.1-2 for correlation of the NC curves to the A-Weighted sound pressure levels

b. Sleep Compartment Noise Level

1. In sleep areas, the continuous broad-band noise level shall not be less than NC25 contour.

2. Hearing protection devices shall be available in sleep areas to provide aural isolation as needed.

5.4.3.2.3.2 Narrow-Band Annoyance Noise Exposure Requirements

{A}

The maximum SPL of any narrow-band continuous component or tone shall be at least 10 dB less than the broad-band SPL of the octave-band which contains the component.

NC Curve	A-Weighted Sound Pressure Level dB(A)
70	80
65	72
60	67
55	63
50	58
45	53
40	49
35	44
30	40
25	36
20	31
15	27

MSIS432 Rev. B

Figure 5.4.3.2.3.1-2 A-Weighted Sound Pressure Level as Weighted to the NC Curve

5.4.3.2.3.3 Wide-Band, Short-Term Annoyance Noise Exposure Requirements

{A}

The wide-band annoyance noise level as a result of long-term and short-term (less than five minutes) noise shall not exceed an L_{eq} (8-hours) of 32 dB during the sleep period. Intermittent noises shall be minimized.

5.4.3.2.3.4 Impulse Annoyance Noise Exposure Requirements

{A}

The following impulse noise annoyance criteria shall apply:

a. Sleep/Rest Periods - Anticipated impulse or transient noises shall not exceed background noise by more than 10 dB during sleep/rest periods.

b. Masking Noise :

1. Masking noise generation to cover-up impulse or fluctuating noise is not a preferred solution but, where utilized, it shall not exceed 55 dB(A) at the crewmember's ear.

2. Masking noise level and spectrum shape shall be under the control of crewmembers.

5.4.3.2.4 Measurement of Noise Levels

{A}

Acoustic noise measurements shall be conducted in accordance with the requirements conforming to the sections on Instrumentation and Measurement in MIL-STD-1474B (Reference 58).

5.4.3.2.5 Noise Reduction For Equipment Upgrades

{A}

Mid-Program system upgrades shall include noise reduction according to the latest technical state of the art which is applicable to the equipment which is being upgraded.

5.4.4 Example Acoustics Design Solutions

{A}

The control of noise involves three interdependent elements:

a. Control at the source.

b. Interruption or absorption along the transmission path.

c. Personal hearing protection.

Noise reduction techniques that can be applied to space module are the same as used in industrial and building noise control.

5.4.4.1 Noise Control at the Source

{A}

The sources of equipment/system noise are vibration, impact, friction and fluid flow turbulence. Figure 5.4.4.1-1 lists typical methods to control noise at the source.

5.4.4.2 Control of Noise Path Transmission

{A}

A source of acoustic noise can radiate sound directly into the air or induce vibrations into a structural path that, in turn, radiate into the air. Airborne noise can be reduced by 1) enclosure and barriers between noise source and crewmembers, 2) sound absorption linings, and 3) sealing of enclosure and perimeter wall penetrations.

Structurally transmitted vibration and radiated noise can be reduced by 1) vibration isolation of machinery supports and panels, 2) panel damping applications, 3) decoupling pipes from pumps with a section of hose, and 4) detuning vibration frequencies by panel stiffening.

The Space Shuttle Orbiter required noise control application to the IMU Cooling System. Inlet and outlet duct reactive/dissipative mufflers were developed and tuned to al-

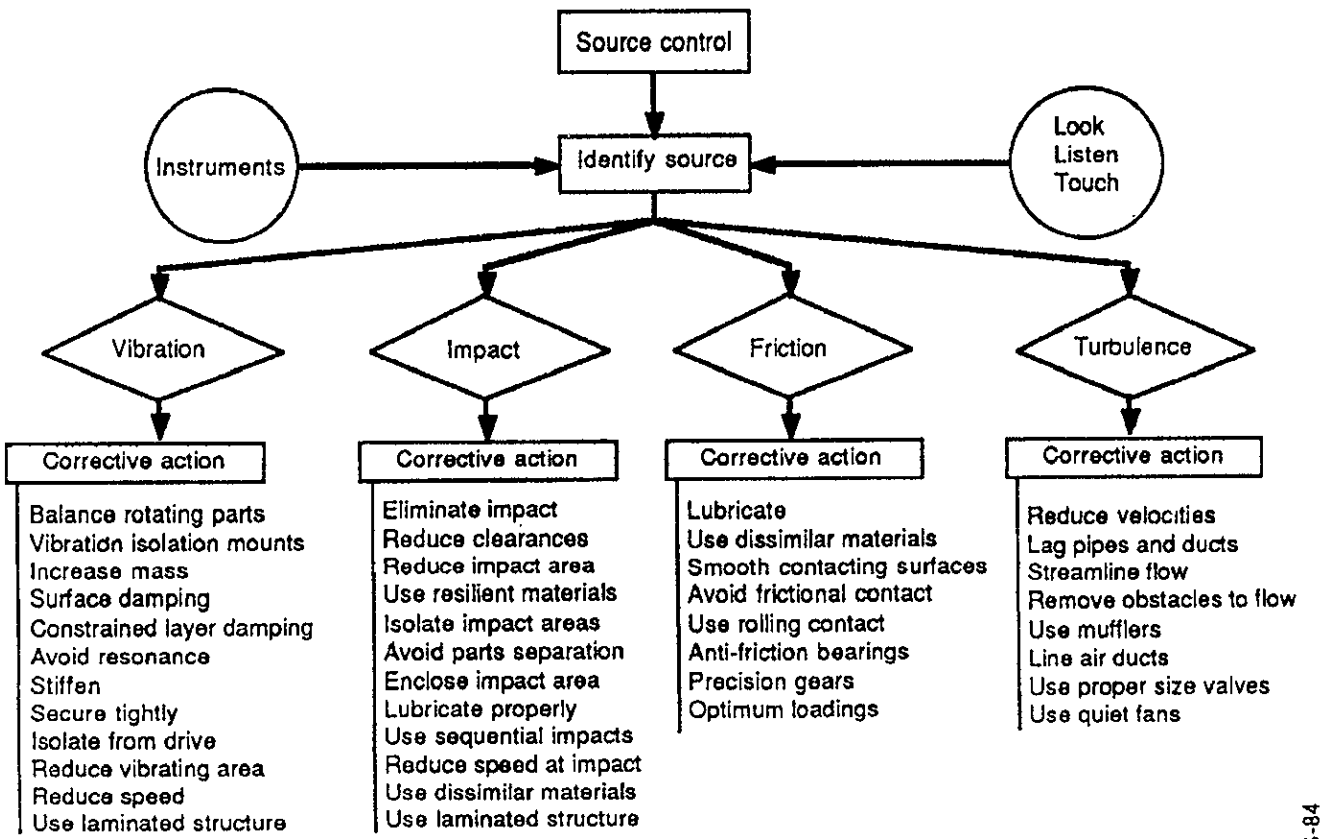

Figure 5.4.4.1-1. Typical Noise Source Corrective Actions

leviate a 2000 Hz noise problem. The fan/heat exchanger is a single duct that was silenced by a straight- through, foam-lined, dissipative muffler. A 22 dB reduction in 2000 Hz octave-band noise was accomplished.

5.4.4.3 Hearing Protection

{A}

Noise that has not been sufficiently reduced requires the use of hearing protection devices. These devices consist of earplugs, ear muffs, noise-attenuating helmets, or combinations of these. TB MED 501 (Reference 281) provides information regarding acceptable personal hearing protective devices.

The Space Shuttle Orbiter noise level during the launch phase is 149 dB (external) and 118 dB (internal). A NASA helmet equipped with communication-type earmuffs will provide 5 to 42 dB attenuation over the range of frequencies from 63 Hz to 8,000 Hz, reducing launch noise at the crewmember's ear to about 110 dB. The NASA helmet reduces launch noise from 107.7 dB(A) to 92.7 dB(A).

5.5 VIBRATION

{A}

5.5.1 Introduction

{A}

This section provides the design considerations, requirements and examples for vibration. Vibratory environments, propagation of vibratory energies, human responses to vibration, and exposure criteria are included. Low frequencies in the range of 0.1 to 1 Hz and higher frequencies from 1 to 80 Hz are presented. Control and protection are also covered.

NOTE: The following symbology has been used throughout this document:

small "g" = vibrational g loads (applied input forces)

capital "G" = linear acceleration G reactions

(Refer to Paragraph 5.3.1, Acceleration Introduction, for acceleration vector conventions.)

5.5.2 Vibration Design Considerations

{A}

The vibration environment in space operations covers a wide range of amplitudes and frequencies. Vibration due to space module booster and control rockets, aerodynamic loading, cabin machinery, and equipment must all be considered. In addition, insecurely fastened stowed items can be a source of vibration.

Vibration seldom occurs in the operational situation as a single isolated variable. Other environmental variables such as weightlessness, linear acceleration, etc., can be expected to interact with vibration either to reduce or to increase the debilitating effects. Equipment variables include size of graduations or illumination of instruments, inflated pressure suits, etc.; procedural variables include task load, variations in time of performance, etc.; and, finally personal variables, such as fatigue and deconditioning. The effects of some of these can be predicted at this time; others must await further research.

Studies of human response to vibration have been conducted in field environments and in complex laboratory simulations. However, most of the available information results from laboratory experiments.

The most useful information shows the effects of changing the characteristics of the vibration (magnitude, frequency, etc.), the influence of modifying the transmission of vibration to the body (by seating and postural alterations), the sources and extent of individual variability, and the effects of alterations to the operator's task.

5.5.2.1 Vibration Environments Design Considerations

{A}

Effects of vibration of the whole body are usually expressed in terms of vibration measured at the interface between the body and the vibrating surface. Vibration of displays and hand controls should also be assessed.

Vertical vibration resulting from general support surfaces is most frequently of interest but other axes and input positions can be important.

All effects of vibration depend on vibration frequency. Some effects are restricted to narrow ranges of frequency.

The influence of vibration duration has not been well studied. Current information shows small or inconsistent effects of duration on task performance. Duration of vibration may cause discomfort or onset of motion sickness.

Vibratory environments have complex motions that vary greatly in magnitude, frequency, direction, and duration. Detailed analysis of motions (including spectral analysis) is required when considering motion effects. The motions may produce several different effects or one dominant effect.

5.5.2.1.1 Launch Phase Vibration Environment

{L}

Significant levels of vibration occur routinely in space module operations during the maximum aerodynamic pressure portion of boost. The vibration is coupled with a significant linear acceleration bias.

The Mercury astronauts complained that vibration during boost interfered with their vision. The Titan II rocket engine produced intense vibration at 11 Hz.

Vibration during the Apollo flights varied significantly with phase of the flight. On the launch pad and during launch the main source of vibration is the rocket booster engine. Low-frequency vibrations are maximum as the missile shudders on the pad at the moment of launch but are of very short duration. The frequency of such vibrations changes with the length and mass of the missile. Hence, as the stages are jettisoned, the vibrations change from an initial frequency of 20 Hz for the first stage to 50 Hz for the third stage. Guidance corrections during launch may add low-frequency transverse peak oscillations of 1-g or less.

5.5.2.1.2 On-Orbit Phase Vibration Environment

{O}

During orbital flight, vibration is minimal. The internal motors for pressurization, air conditioning, and pumping systems are potential sources of vibration. Other structure-borne vibrations during orbital flight are difficult to predict.

5.5.2.1.3 Entry Phase Vibration Environment

{L}

Significant vibration levels occur during reentry but these levels are not as intense as experienced during the launch phase. The vibration is coupled with a significant linear deceleration bias.

During entry, low-frequency oscillation may occur if the entry angle is too steep. If the angle is more than one or two degrees, high peak oscillation, depending on the shape of the vehicle, may be produced. The frequency of such oscillations reach a peak coincident

with the entry deceleration peak. The amplitude of the oscillation progressively decreases during deceleration. For an entry angle of ten degrees, a 2 Hz oscillation with a peak of 0.12-g and an arc of one degree has been predicted. Skip- glide entry of a lift-drag vehicle may produce oscillations.

5.5.2.2 Vibration Propagation Design Considerations

{A}

Vibration refers to alternating motion of a body with respect to a reference point. This section is concerned with solid-borne or mechanical vibration that is transmitted directly to the crewmember by way of the buttocks, hands, feet, etc.

Vibration can be transmitted from the source to the crewmember by a direct mechanical path or by several flanking paths. Airborne noise impinging on structure can induce structural vibration that can be transmitted to the crewmember via support structure. Mechanical vibration is transmitted by compression, shear, and torsional forces. The amount of vibration energy that arrives at the crewmember depends on the major transmission paths between source and receiver, coupling loss factors, and the modes of mechanical response. A crewmember's seat, foot restraints, handholds etc., are important elements in the vibration path. Design of mountings deserve special attention in reducing vibrations.

5.5.2.3 Human Responses to Vibration Design Considerations

{A}

Vibration may affect crewmembers performance, and may produce physiological and biodynamic effects, as well as subjective or annoyance effects.

Whole-body vibration may act additively with noise (Paragraph 5.4) to cause stress and fatigue and degrade vigilance and performance.

There has been limited research combining vibration with other environmental stressors such as acceleration, noise, and altitude. At 3.5 G, vibration levels above +0.30 gx at 11 Hz are believed to affect crewmember performance. A G-bias apparently can change some body vibration resonances as well as lower tolerance limits. At 1-G the abdominal mass resonance occurs at 4-8 Hz. At 2.5-G a subject noted "awareness of stomach vibrating" between 9.5 and 12.5 Hz.

(Refer to Paragraph 5.9, Combined Environmental Effects, for more details.)

Additional studies are needed to determine the effects of increasing vibration magnitude on impedance for higher G-bias levels simulating liftoff and launch.

5.5.2.3.1 Physiological Effects of Vibration

{A}

The physical responses of the body are primarily the result of the body acting as a complex system of masses, elasticities, dampings, and couplings in the low frequency range, i.e., up to 50 Hz. The impedance of the body and its parts and organs damp vibration over certain frequency ranges and may amplify vibration over other frequency ranges within various portions or all of the body.

Vibration energy transferred from supporting structure to the crewmember is the primary determinant of biological effects which, in turn, cause decrements in performance and discomfort. Frequencies that correspond to body resonances of organs and limbs result in amplified motion of the resonant body component. Figure 5.5.2.3.1-1 lists various parts of the body and the approximate frequency where mechanical resonance occurs.

Body component	Resonant frequency (Hz)
Whole body, standing erect	6 & 11-12
Whole body, standing relaxed	4-5
Whole body (transverse)	2
Whole body (sitting)	5-6
Head	20-30
Head, sitting	2-8
Eye ball	40-60
Eardrum	1000
Head/shoulder, standing	5 & 12
Head/shoulder, seated	4-5
Shoulder/head, transverse rib	2-3
Main torso	3-5
Shoulder, standing	4-6
Shoulder, seated	4
Limb motion	3-4
Hand	1-3
Hand	30-40
Thorax	3.5
Chest wall	60
Anterior chest	7-11
Spinal column	8
Thoraco-abdominal viscera (semi-supine)	7-8
Abdominal mass	4-8
Abdominal wall	5-8
Abdominal viscera	3-3.5
Pelvic area, semi-supine	8
Hip, standing	4
Hip, sitting	2-8
Foot, seated man	>10

MSIS-138

References: 101, Pages 6-33 182, Pages 4.1-5 and 4.105
92, Pages 307-330

Figure 5.5.2.3.1-1 Body-Part Vibration Resonant Frequency Region (1-G Bias)

5.5.2.3.2 Performance Effects of Vibration

{A}

Vibration affects performance either by modifying perception or by influencing control movements. Frequencies that affect performance are shown in Figure 5.5.2.3.2-1.

The effect of vibration on performance depends on the source of the motion, type of motion, environmental conditions, response of the individual, and requirements placed on the individual.

Threshold for detection of vibration is approximately +/- one min arc of visual angle; vibration amplitudes greater than those in Figure 5.5.2.3.2-2 (+/- two min arc) may, depending on the task, affect reading ability.

Figure 5.5.2.3.2-2 shows mean amplitudes of observer vibration which produce visual blur of stationary point sources of light. Also shown are the amplitudes of z-axis whole-body vibration from ISO 2631 (1978).

Hand control performance is most often degraded by vibration which causes a mechanical movement at the hand.

Vibration transmitted to the hand-control interface may degrade system performance if the system responds at the frequency of the vibration; the vibration response of the body often results in greatest vibration at about 5 Hz.

Low-frequency oscillation of the body (Hz) can affect activities involving unsupported arm movements and tasks such as navigational plotting.

5.5.2.3.3 Discomfort/Annoyance Effects of Vibration

{A}

Excessive vibration can be unpleasant, painful, or even hazardous to health. In severe vibration environments, performance can be impaired because of pain or discomfort. Since vibration of aircraft and vehicles often increases with speed, maximum performance of crew may be limited.

Activity	Frequency range (Hz)
Equilibrium	30 - 300
Tactile sense	30 - 300
Speech	1 - 20
Head movement	6 - 8
Reading (texts)	1 - 50
Tracking	1 - 30
Reading errors (instruments)	5.6 - 11.2
Manual tracking	3 - 8
Depth perception	25 - 40, 60 - 40
Hand grasping handle	200 - 240
Visual task	9 - 50

Reference: 10, Pages 8-38, 8-68, 8-79
21, Figure 1 (1), Page 1
102, Page 4.110

MSIS-139

Figure 5.5.2.3.2-1. Sensitive Vibration Frequencies Affecting Human Performance

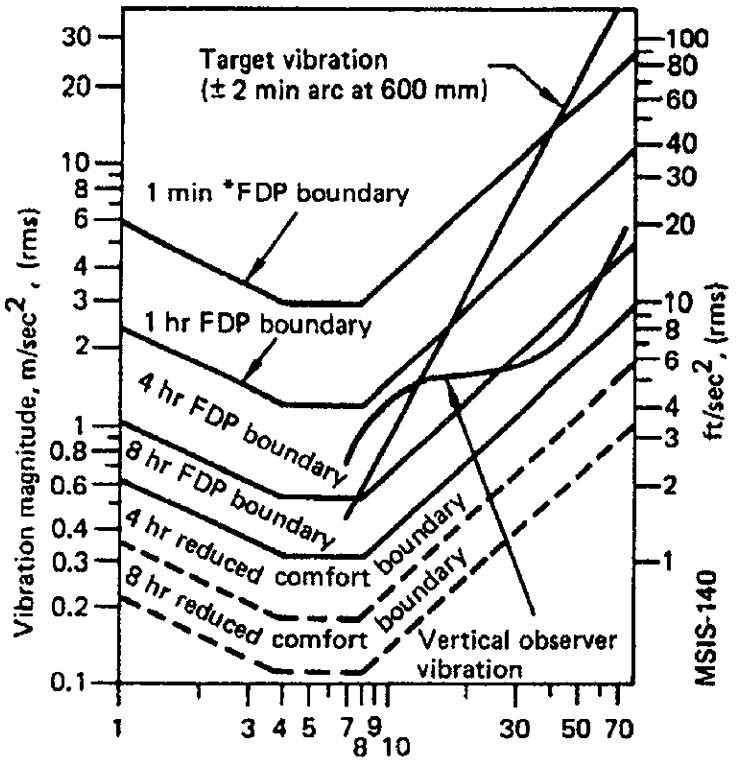

*Fatigue Decreased Proficiency

Reference: 182, Figure 1, page 4.109

Figure 5.5.2.3.2-2. Vibration Boundaries for ± 2 Minute Arc Visual Angle

Motion sickness is often caused by low-frequency (.63 Hz) vertical oscillation. The greatest sensitivity to vibration acceleration occurs at approximately 0.1 - 0.3 Hz. At these frequencies 1 m/sec^2 rms may result in an incidence of vomiting of approximately 10%. (See Figure 5.5.3.2.1-1.)

Correlation occurs between z-axis vertical rms acceleration magnitude, vomiting incidence, and illness. Correlation is highest with z-axis motion and is increased slightly when other axes are included in the analysis. The percentage of persons becoming motion sick increases as the exposure duration increases up to four hours.

The perception threshold for 2-100 Hz vibration is approximately 0.01 m/sec^2 rms for most axes of whole-body vibration and most orientations of the body. At vibration magnitudes above threshold, the discomfort (i.e., subjective magnitude) increases in linear proportion to the vibration magnitude.

Exposure of the entire body or parts of the body (e.g., limbs) to high magnitudes of continuous vibration or shock can cause injury. The acceptable magnitude depends on several factors including the frequency, direction, duration, and point of contact with the body. General guidance is available but the probability of any specific injury due to given conditions cannot be calculated.

Crewmember discomfort is not quantified on an absolute scale. A scale of comfort reaction to whole body vibration is as follows:

a. Not Uncomfortable - g_x less than 0.153 m/sec^2

b. A Little Uncomfortable - g_x of 0.315 to 0.63 m/sec^2

c. Fairly Uncomfortable - g_x of 0.5 to 1.0 m/sec^2

d. Uncomfortable - g_x of 0.8 to 1.6 m/sec^2

e. Very Uncomfortable - g_x of 1.25 to 2.5 m/sec^2

f. Extremely Uncomfortable - g_x greater than 2.0 m/sec^2

Figure 5.5.2.3.3-1 shows short-term vibration exposure boundaries as a function of acceleration and frequency from 1 Hz to 1000 Hz. Unless otherwise stated, the vibration boundaries are for exposure times of 5 to 20 minutes, which includes the spacecraft launch or entry phase.

Figure 5.5.2.3.3-2 lists some vibration discomfort symptoms and the range of frequencies of lowest tolerance.

5.5.2.4 Vibration Exposure Limits Design Considerations

{A}

5.5.2.4.1 Vibration Direction Criteria Design Considerations

{A}

Rectilinear vibrations transmitted to crewmembers should be measured in the appropriate directions of an orthogonal coordinate system having its origin at the heart. Limiting criteria exist for vibration accelerations in the x, y, and z-axis. (See Figure 5.3.1-1.)

Angular (or rotational) vibrations about a center of rotation are frequently an important part of the vibration environment. However, little information on the effects of angular (or rotational) vibration is available.

5.5.2.4.2 Vibration Exposure Criteria Design Considerations (0.1 to 1 Hz)

{A}

The frequency range between 0.1 and 0.63 Hz is primarily associated with the symptoms of motion sickness: pallor and dizziness through nausea to vomiting and complete disability.

The "severe discomfort boundary" is that limit of vibration where approximately 10% of unadapted crewmembers in normal health will experience severe discomfort and temporary disability.

The "decreased proficiency boundary" is that limit of vibration acceleration where manual dexterity is impaired. The acceptable degree of impairment and corresponding acceleration levels will vary greatly with the nature of the task.

The reduced comfort boundary is that limit of vibration acceleration when the onset of various feelings of discomfort occurs.

5.5.2.4.3 Vibration Exposure Criteria Design Considerations (1 to 80 Hz)

{A}

The human body is especially sensitive to vibratory accelerations from 1 to 30 Hz. The three generally recognized limits for preserving comfort, working proficiency, and safety (or health) are called the "reduced comfort boundary", the "fatigue-decreased proficiency boundary", and the "exposure limit", respectively.

Rectilinear vibration acceleration criteria exist from 1 Hz to 80 Hz. Rotational vibration standards have not been established.

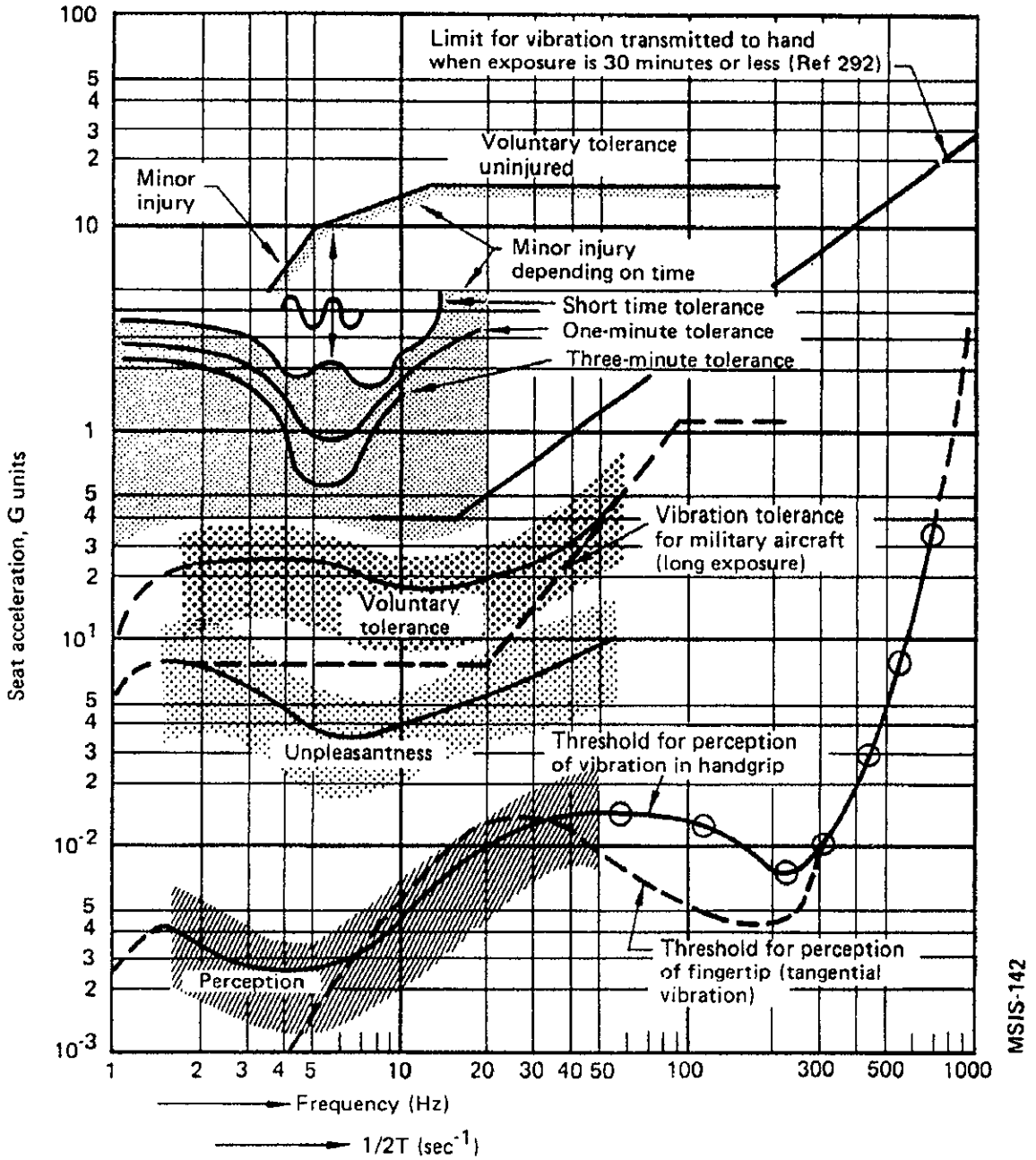

Voluntary tolerance-lap belt and shoulder harness

Voluntary tolerance-unprotected for 5 to 20 minutes

Unpleasantness

Perception

Reference: 5, Figure 72, page 265
292, Figure 5.8, page 93

Figure 5.5.2.3.3-1. Short-term Vibration Tolerance

Symptom	Frequency (Hz)
Motion sickness	0.1 - 0.63
Abdominal pains	3 - 10
Chest pain	3 - 9
General discomfort	1 - 50
Complaints	4 - 8
Skeleto-muscular discomfort	3 - 8
Head symptoms	13 - 20
Lower jaw symptoms	6 - 8
Influence on speech	13 - 20
"Lump in throat"	12 - 16
Urge to urinate	10 - 18
Influence on breathing	4 - 8
Muscle contractions	4 - 9
Testicular pain	10
Dyspnea	1 - 4

Reference: 5, Page 266
92, Pages 237-239
294, Table 1, Page 13

MSIS-143

Figure 5.5.2.3.3-2. Sensitive Vibration Frequencies for Discomfort Symptoms

a. Exposure Limit - The vibration acceleration exposure limit is set at approximately half the level considered to be the threshold of pain.

b. Fatigue-Decreased Proficiency Boundary - The vibration acceleration limit beyond which exposure can be regarded as carrying a significant risk of impaired working efficiency in many kinds of tasks is that in which fatigue is known to degrade performance. The fatigue-decreased proficiency boundary limit is a function of frequency and exposure time and is one-half (-6 dB) of the acceleration values given for the Exposure Limit.

c. Reduced Comfort Boundary - The vibration acceleration limit related to comfort and such activities as eating, reading, and writing. The reduced comfort boundary is one-third (-10 dB) of the value of the Fatigue-Decreased Proficiency Boundary.

5.5.2.4.4 Vibration Duration Criteria Design Considerations

{A}

Variations in the intensity of vibration and any intermittency or interruption of exposure which may occur during the period will have a cumulative effect on a crewmember's daily exposure.

a. Continuous Exposure - The tolerable acceleration level increases with decreasing exposure time. Vibration limits are established for durations of one minute to 24 hours.

b. Intermittent Exposure - If the exposure to vibration is interrupted by pauses during the working day, but the intensity of exposure remains the same, then the effective total daily exposure time is obtained by adding up the individual exposure times.

c. Equivalent Exposure Time - If the rms acceleration amplitude varies appreciably with time, or if the total daily exposure is composed of several individual exposure times, then an "equivalent total exposure" is determined.

5.5.3 Vibration Design Requirements

{A}

The basic environmental limitations and criteria that apply to the design of crew stations and other habitable compartment areas within space module are included herein. Included are the various vibration environmental parameters essential to crew safety and comfort during a complete mission. The vibratory environment of the space module shall be designed to protect the crewmembers and preserve their ability to perform their operational functions with proficiency throughout the total mission.

5.5.3.1 General Vibration Design Requirements

{A}

The following general vibration design criteria shall be observed:

a. General Vibration Design - Vibration generation and penetration shall be controlled to the extent that vibration energy will not cause personnel injury, interfere with task performance, induce fatigue, or contribute to the degradation of overall man/machine effectiveness during manned periods.

b. Equipment Vibration -

1. All vibrating equipment shall be mounted and located to reduce vibration at crew stations.

2. System design shall include vibration control provisions.

3. Means shall be provided to facilitate periodic measurement of vibration levels to verify that exposure limits are not being exceeded.

c. Long Duration Vibrations - For vibration of duration longer than 8 hours in the 0.1 to 0.63 Hz band, or 24 hours in the 1 to 80 Hz band, the values at 8 hours and 24 hours, respectively, shall be applicable. Refer to 5.5.3.2.1 and 5.5.3.3.2.

5.5.3.2 Vibration Exposure (0.1 to 1 Hz) Design Requirements

{A}

5.5.3.2.1 Severe Discomfort Boundary

{A}

The following vibration acceleration limits for 0.1 to 0.63 Hz shall apply:

a. Longitudinal Vibration - Figure 5.5.3.2.1-1 acceleration limits shall not be exceeded for the corresponding periods of time in the z-axis at any crewmember station. If other modes of vibration exist, particularly pitch and roll, boundary accelerations shall be reduced by 25%. These criteria apply to 1-G bias conditions and on-orbit microgravity conditions.

b. Transverse Vibration - Use 30% of value for longitudinal vibration requirements.

c. Rotational Tolerance - Tumbling or rotational rates shall not exceed 60 rpm about the axis of the heart or 40 rpm about the axis of the hip. If rotational vibration exists, the levels in Figure 5.5.3.2.1-1 shall be reduced by 33%

d. Launch Vibration Limits - During the launch phase, 0.1 - 0.63 Hz vibration shall not exceed 90% of those values stated for 1-G bias acceleration.

5.5.3.2.2 Decreased Proficiency Boundary

{A}

The following acceleration limits for 0.1 to 0.63 Hz for crewmember stations and work areas shall apply:

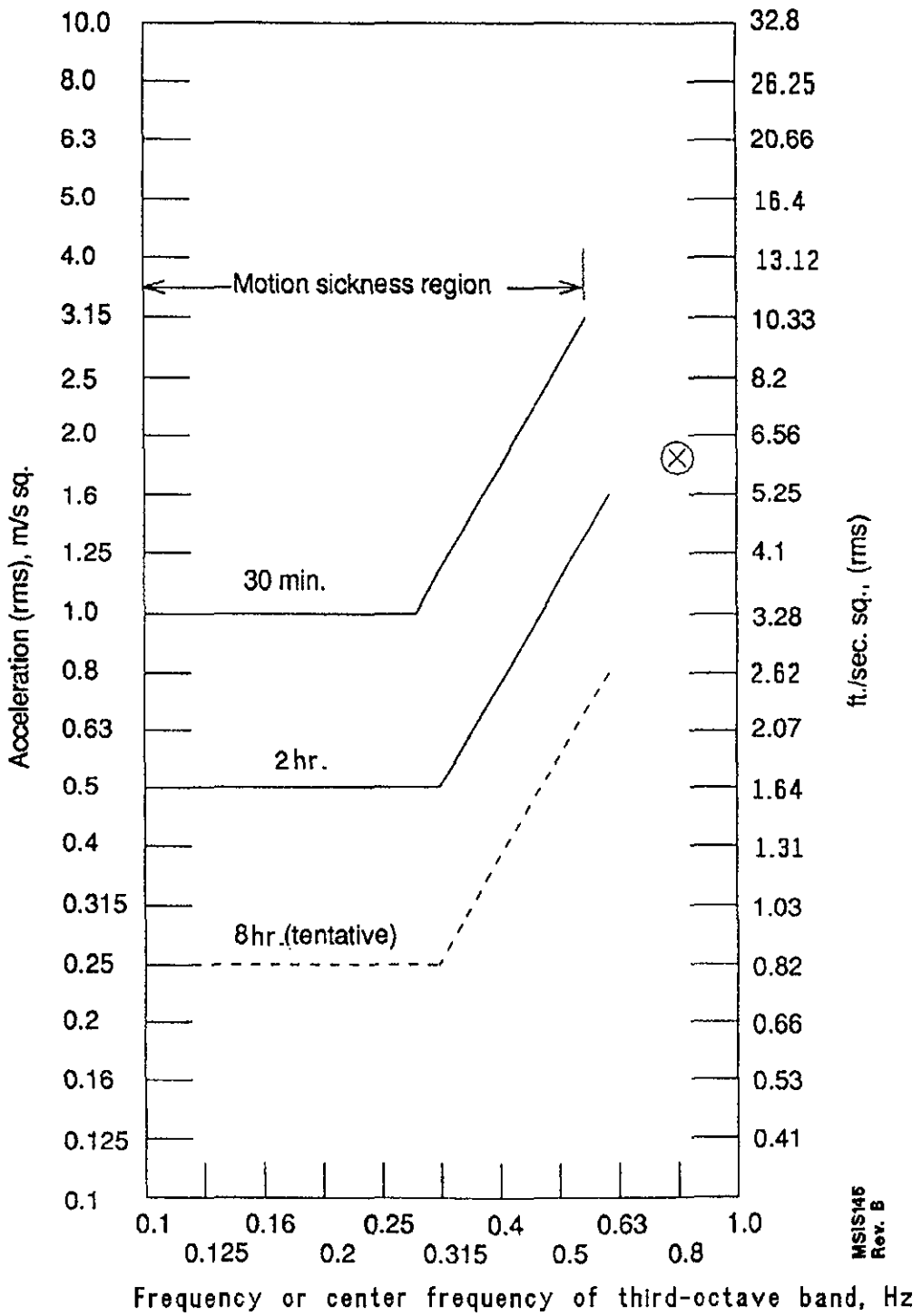

⊗ Snyder, Fred (Boeing, 1964)
Reference: 101, page 44, add. 2-1982 E with updates
Note: Eight-hour curve created by exterpolation based on 30 min. and 2 hour testing.

Figure 5.5.3.2.1-1 Longitudinal (Z-Axis) Acceleration Limits (0.1 to 0.63 Hz) "Severe Discomfort Boundaries"

a. Longitudinal Vibration - Because of lack of data, the decreased proficiency boundaries below 1 Hz in the z-axis have yet to be specified for various tasks. For tasks requiring writing and fine manual control, vibration rms-values shall not exceed 1.75 m/sec^2.

b. Transverse Vibration - Because of lack of data, the decreased proficiency boundaries below 1 Hz in the x, y-axis have yet to be specified.

c. Visual Acuity Effects - For whole body vibration in the ranges of 3 to 11 Hz or 22 to 30 Hz, provisions shall be made to protect the crew from loss of visual acuity.

5.5.3.2.3 Reduced Comfort Boundary

{A}

The following vibration acceleration limits for 0.1 to 1 Hz apply to rest and sleep areas:

a. Longitudinal Vibration - Because of lack of data and the variability of onset of various reduced comfort symptoms requirements are not specified at this time.

b. Transverse Vibration - Because of lack of data and the variability of onset of various reduced comfort symptoms, requirements are not specified at this time.

5.5.3.2.4 Vibration Duration

{A}

The following vibration duration criteria for determining effective daily exposure shall apply:

a. Whole Body z-axis Vibration (0.1 to 0.63 Hz) - Figure 5.5.3.2.1-1 shall be used to define the severe discomfort boundary for 0.5-, 2- and 8-hour exposures. The relationship a^{2t} = constant and values in Figure 5.5.3.3.2-1 shall be used if interpolation of summation of a varying acceleration time history is required.

b. Whole Body x, y-axis Vibration (0.1 to 0.63 Hz) - Because of lack of data, vibration requirements are not specified at this time.

c. Long Duration Vibrations - For vibration of duration longer than 8 hours in the .1 to .63 Hz band, the amplitude limits for 8 hours shall be applicable.

5.5.3.2.5 Vibration Data From 0.63 to 1.0 Hz.

{A}

With the exception of the one datapoint shown in Figure 5.5.3.2.1-1, values relative to vibration effects between 0.63 Hz and 1.0 H are undefined at this time.

5.5.3.3 Vibration Exposure (1 to 80 Hz) Design Requirements

{A}

5.5.3.3.1 Fatigue-Decreased Proficiency Boundary

{A}

The following vibration acceleration limits for 1 to 80 Hz for crewmember stations and work areas during orbital to planetary conditions shall apply:

a. Longitudinal Vibration - Vibration acceleration exposure shall not exceed the limits shown in Figure 5.5.3.3.1-1 for z-axis direction, unless specified otherwise.

b. Transverse Vibration - Vibration acceleration exposure shall not exceed the limits shown in Figure 5.5.3.3.1-2 for x, y-axis directions, unless specified otherwise.

c. Visual Acuity Effects - For whole body vibration in the ranges of 3 to 11 Hz or 22 to 30 Hz, provisions shall be made to protect the crew from loss of visual acuity.

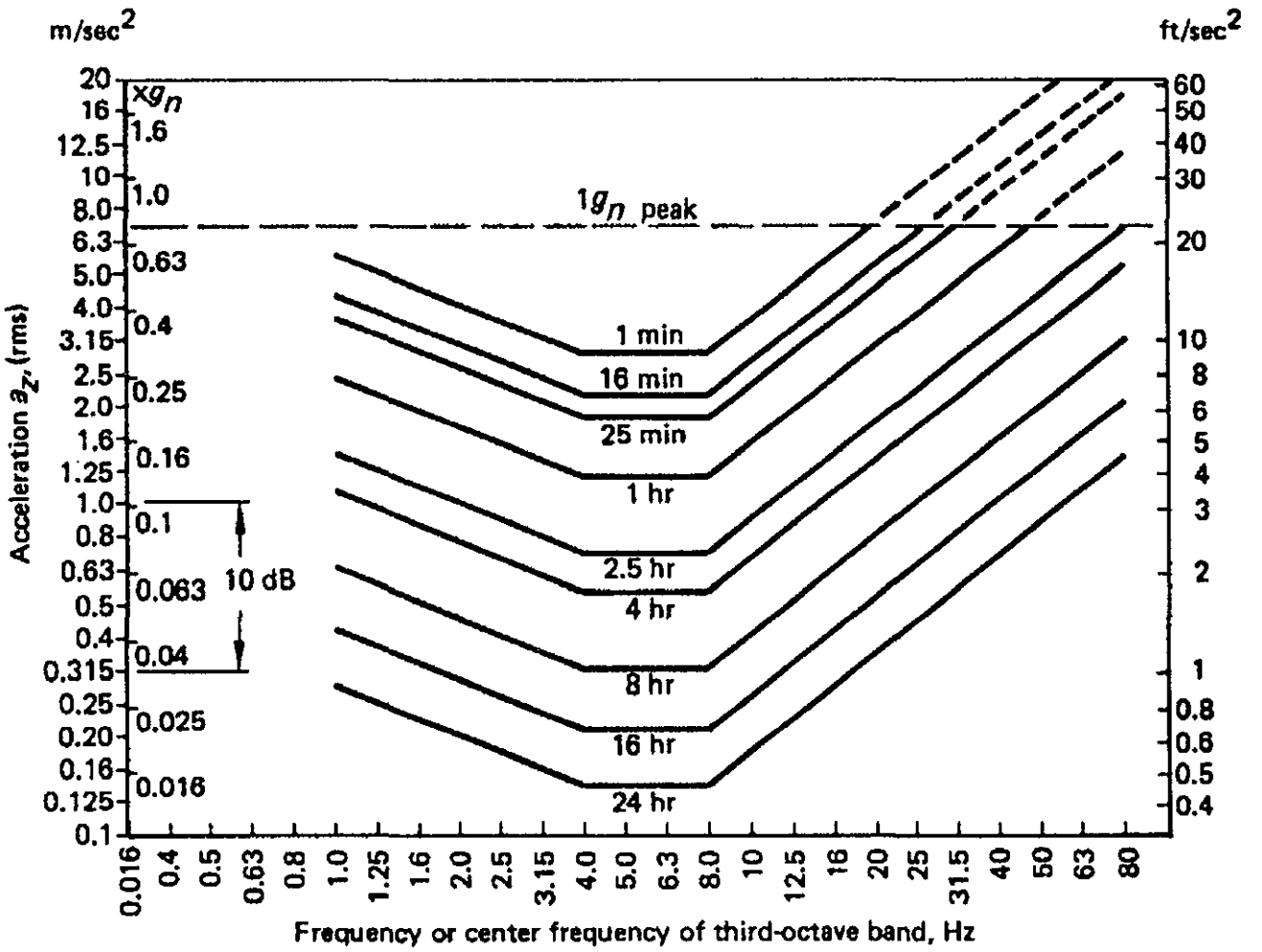

To obtain:

- "exposure limits": multiply acceleration values by 2 (6 dB higher);
- "reduced comfort boundary": divide acceleration values by 3.15 (10 dB lower)

MSIS-146

Reference: 2, Figure 42, page 175
101, page 10

Figure 5.5.3.3.1-1 Longitudinal (z-axis) Acceleration Limits "Fatigue-decreased Proficiency Boundary"

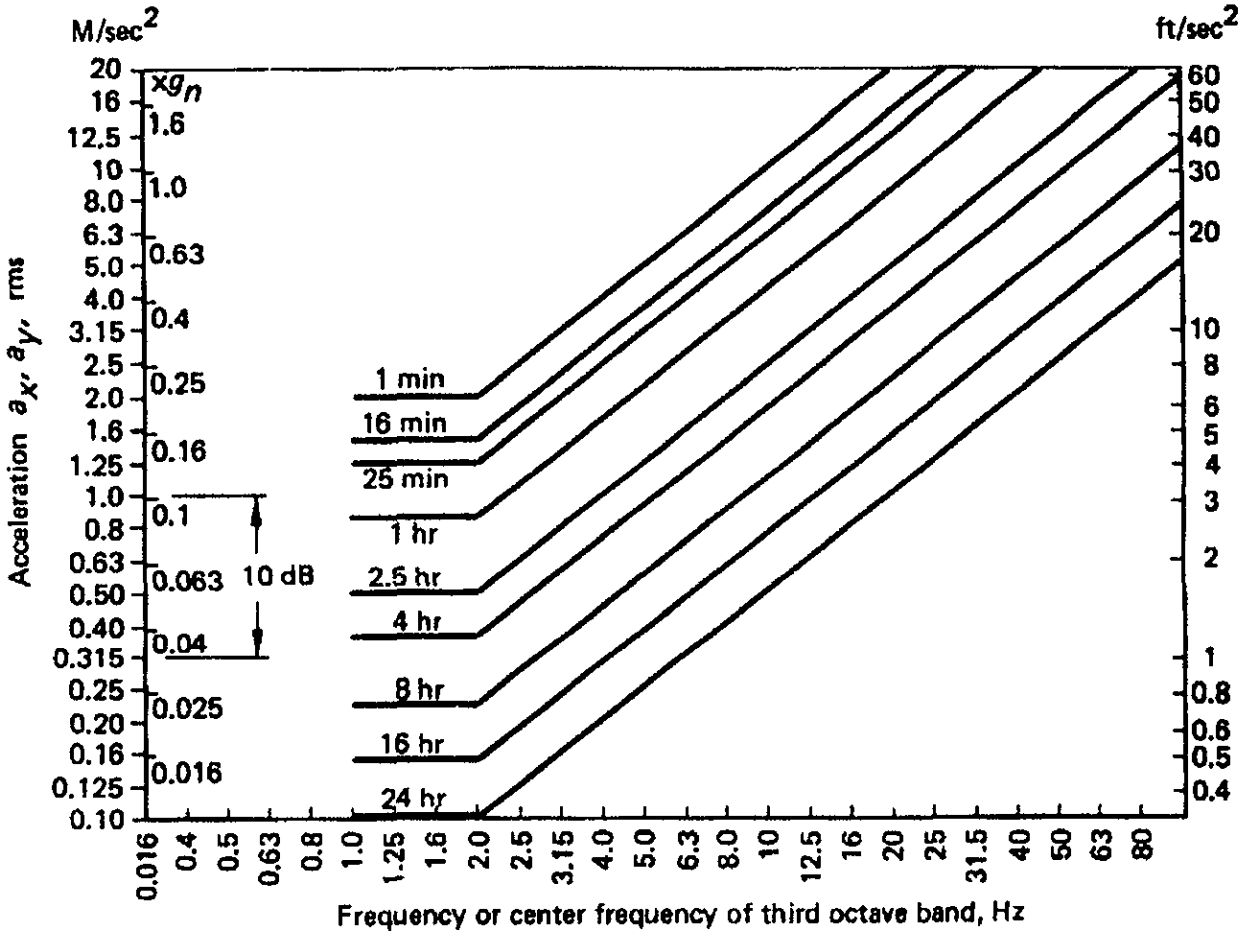

To obtain:

- "exposure limits": multiply acceleration values by 2 (6 dB higher);
- "reduced comfort boundary": divide acceleration values by 3.15 (10 dB lower)

MSIS-147

Reference: 2, Figure 42, page 175
101, page 12

Figure 5.5.3.3.1-2. Transverse (x-axis, y-axis) Acceleration Limits "Fatigue-decreased Proficiency Boundary"

5.5.3.3.2 Vibration Exposure Limit

{A}

The following vibration acceleration limits for 1 to 80 Hz for crewmember 1-G and on-orbit stations shall apply:

a. Longitudinal Vibration - Vibration acceleration values in the z-axis shall not exceed the "fatigue-decreased proficiency boundary" (Figure 5.5.3.3.1-1) by a factor of 2 (6 dB higher.).

b. Transverse Vibration - Vibration acceleration values in the x, y-axis shall not exceed the "fatigue-decreased proficiency boundary" (Figure 5.5.3.3.1-2) by a factor of 2 (6 dB higher).

c. Launch Vibration Limits - During the launch phase it is permissible to use twice the safety factor of Figures 5.5.3.3.1-1 and 5.5.3.3.2-1 to determine the maximum vibration limits. However, if visual monitoring of critical displays is required, then the vibration criteria shown in Figure 5.5.3.3.2-1 shall be used for vibration frequencies up to 35 Hz. For visual acuity during launch the vibration limits shall not exceed those shown in Figure 5.5.3.3.2-1 (0-35 Hz) and Figure 5.5.3.3.2-2 (35-1000 Hz).

5.5.3.3.3 Reduced Comfort Boundary

{A}

The longitudinal vibration acceleration exposure for 1 to 80 Hz shall not exceed the limits shown in Figure 5.5.3.3.3-1 for x, y-axis vibration in the crewmember rest and sleep areas during orbital or planetary conditions.

5.5.3.3.4 Vibration Duration

{A}

The following vibration duration criteria for determining effective exposure shall apply:

a. Whole Body z-axis Vibration (1 to 80 Hz) - Figure 5.5.3.3.4-1 shall be used to define the fatigue-decreased proficiency boundary for longitudinal vibration duration time between 1 minute and 24 hours.

b. Whole Body x, y-Axis Vibration (1 to 80 Hz) - Figure 5.5.3.3.4-2 shall be used to define the fatigue-decreased proficiency boundary for transverse vibration time between 1 minute and 24 hours.

c. Interrupted Vibration - If the exposure to vibration is interrupted by pauses during a 24-hour period, but the intensity of exposure remains the same, then the effective total daily exposure time shall be determined by adding up the individual exposure times.

d. Variable Amplitude Vibration - If the acceleration amplitude varies with time or if the total daily exposure is composed of several individual exposure times at different levels, then an "equivalent total exposure" shall be determined by the procedure given in Reference 101, p. 498.

e. Long Duration Vibrations - For vibration of duration longer than 24 hours in the 1 to 1000 Hz band, the amplitude limits for 24 hours shall be applicable.

5.5.4 Example Vibration Design Solutions

{A}

The control of vibration involves three interdependent elements: 1) Vibration control at the source, 2) interruption or absorption along the transmission path, and 3) protection at the receiver.

Vibration control techniques that can be applied to space module are basically the same as used in industrial and building vibration control. The G-bias on equipment and structure may range from 0 to 20-G, which will affect space module component systems vibration characteristics.

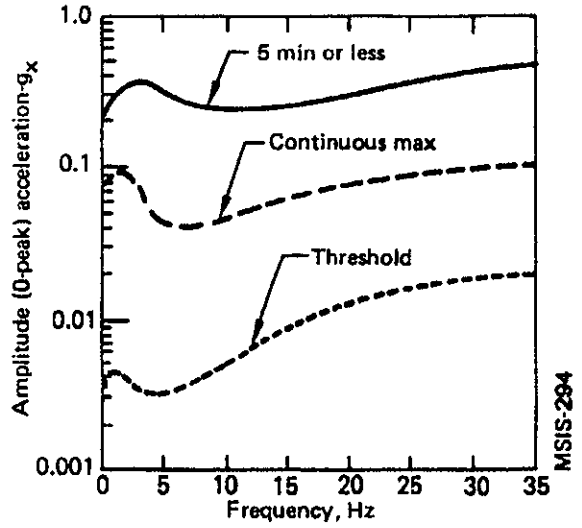

Reference: 198, page 13

Figure 5.5.3.3.2-1 Tolerance Limits to Equivalent Sinusoidal Vibration (g_x) for Visual Monitoring of Critical Displays During Launch

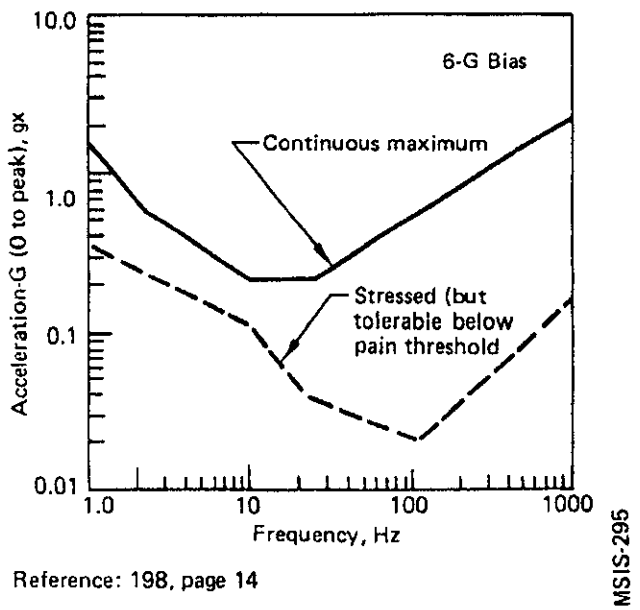

Reference: 198, page 14

Figure 5.5.3.3.2-2 Maximum Tolerable Limits of Vibration (g_x) for Visual Activity and Toggle Switch Manipulation During Launch

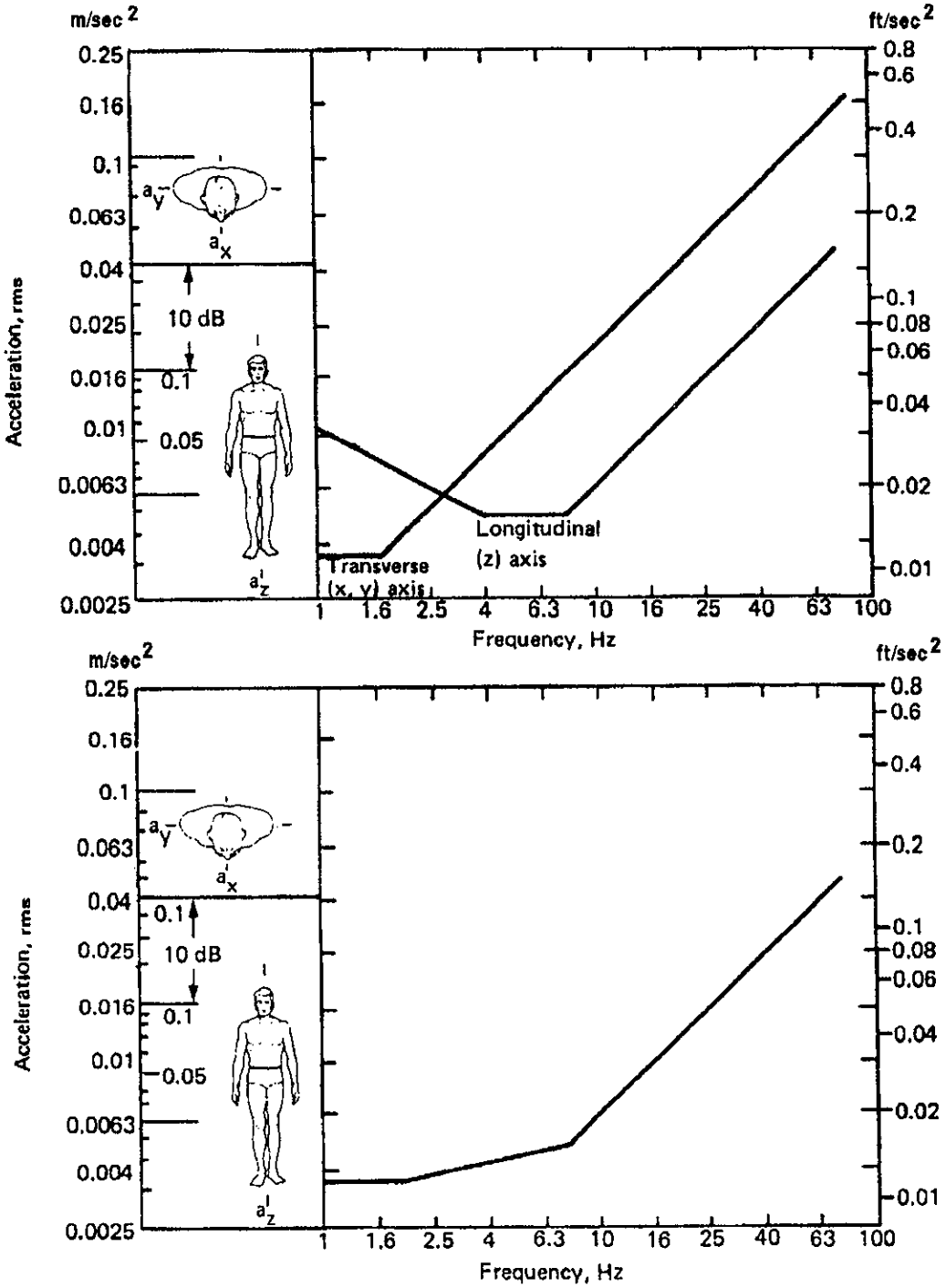

Vibration exposure criteria for longitudinal and transverse (upper curve) and combined (lower curve) directions with respect to body axis.

Reference: 2, Figure 44, page 177

Figure 5.5.3.3.3-1. Vibration Exposure Criteria

MSIS-148
REV. A

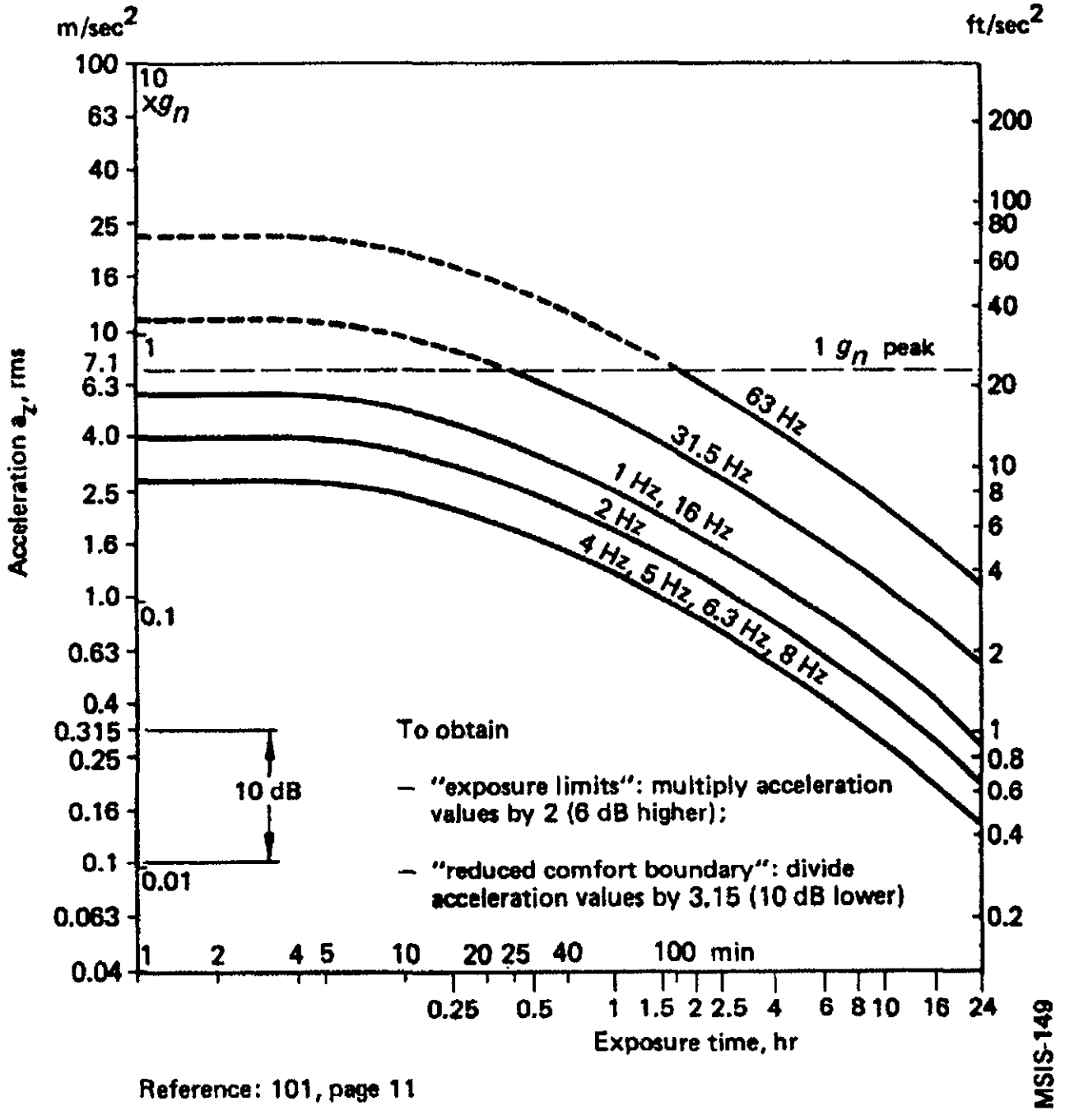

Reference: 101, page 11

Figure 5.5.3.3.4-1. Longitudinal (z-axis) Acceleration Limits "Fatigue-decreased Proficiency Boundary"

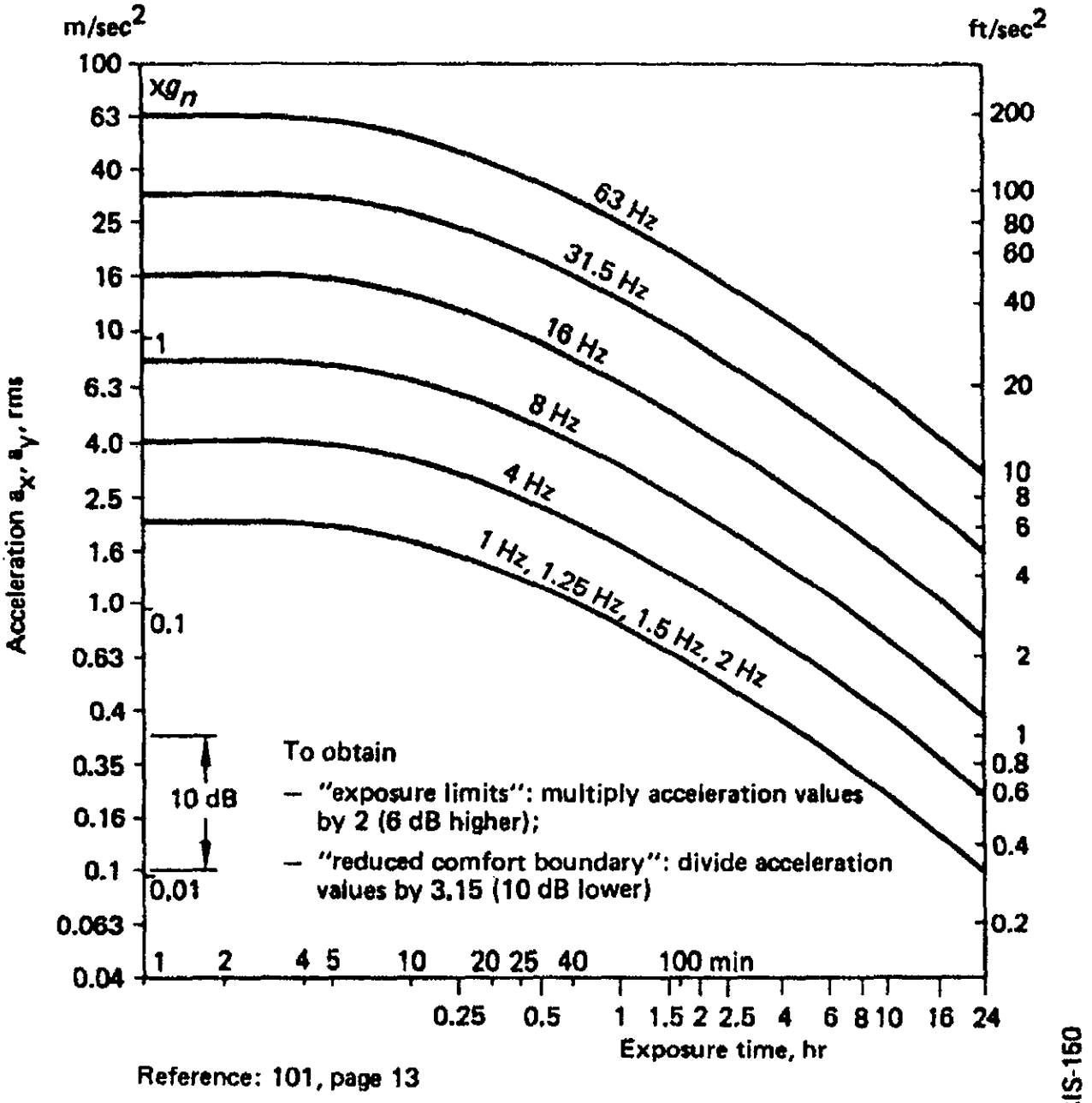

Figure 5.5.3.3.4-2. Transverse (x-axis, y-axis) Acceleration Limits "Fatigue-decreased Proficiency Boundary"

5.5.4.1 Vibration Control at the Source

{A}

The design of space module/equipment and control of vibration is initially implemented by stating equipment procurement specifications and locating equipment remotely from crewmember work stations and rest/sleep areas. The sources of vibration are:

a. Torsional.

b. Bending.

c. Flex and plate-modes.

d. Translational, axial, or rigid-body.

e. Intermittent.

f. Random and miscellaneous.

Figure 5.5.4.1-1 lists examples of sources of vibration.

Methods of controlling vibration of various sources are listed in Figure 5.5.4.1-2.

Example vibration problem: Intense vibration at 11 Hz was experienced with the Titan II rocket engine. A similar problem was detected in an early Saturn V test. Fuel pump and engine phasing modifications reduced the vibration intensity to acceptable levels.

Torsional vibration	Translational, axial, or rigid-body vibration
Reciprocating devices	
Valves	Reciprocating devices
Compressors	Engines
Pumps	Compressors
Engines	Shakers
Rotating devices	Motors
Electric motors	Devices on vibration mounts
Fans	
Turbines	Intermittent vibration
Gears	
Turntables	Impacts on floor
	Impacts on walls
Bending vibration	Impacts on the hull
	Typewriters
Shafts in motors	Stepping motors
Springs	Relays
Belts	
Pipes	
	Random and misc. vibration
Flexural and plate-mode vibration	
	Rocket combustion
Hulls and decks	Aerodynamic turbulence
Turbine blades	Gas and fluid flow interacting in pipes and ducts
Gears	
Floors	
Walls	

Reference: 295, Table 2-1, Page 11

MSIS-151

Figure 5.5.4.1-1. Sources of Vibration

Gas or fluid flow vibrations

Reduce flow rate
Use less pressure
Use quieter valve
Modify impeller
Smooth pipe or duct
Lagging of pipe or duct
Use flow turning vanes at bends

Gear vibrations

Use proper lubrication
Reduce speed
Balance gear
Replace worn/damaged gears
Use higher quality gear
Use different material gear

Rotor vibrations

Balance rotor/coupling
Modify force or speed
Alter rotor bearings
Add damping
Reduce mass of moving elements

Bearing vibrations

Lubricate properly
Adjust bearing alignment or mounting
Reduce speed
Replace worn or damaged bearings
Different bearing type

Magnetic vibration

Use quieter motor, choke or transformer
Isolate or enclose
Relocate

Belt/chain vibration

Adjust tension
Adjust alignment
Lubricate properly
Reduce speed
Change material or type

Pump noise

Reduce speed
Reduce pressure
Alter pressure cycle
Isolate

Combustion noise

Correctly adjust burner
Use lower pressure barrier

Impact vibration

Avoid it
Cushion it
Apply damping

MSIS-152

Reference: 295, Table 16-2, Pages 241, 247-249

Figure 5.5.4.1-2. Vibration Control Methods at the Source

5.5.4.2 Control of Vibration - Path Transmission

{A}

Space module structure vibration can be excited mechanically or by airborne noise. Increasing the losses in the vibration transmission path is a common way to reduce vibration levels at the receiver.

Excitation of structures such as walls, floors, and ceilings can be reduced by noise control at the acoustic source or by applying acoustic absorption and damping material at the excited structure.

Mechanically coupled transmission can be controlled by interrupting the transmission path to the receiver or introducing attenuating element couplings between the source and the receiver. Figure 5.5.4.2-1 lists common ways to reduce vibration path efficiency.

5.5.4.3 Vibration Protection

{A}

Protection of crewmembers from vibration problems is best served by controlling vibration at the source or along the transmission path. Residual over-limit vibrations at crewmember stations requires special attention to body posture and support.

a. Body Posture - The semi-supine position is generally considered best for severe vibration in x, y, or z-axis, especially under high G-bias loads; i.e., launch, reentry, etc. The seated position is worse for z-axis vibration. The standing position is worse for x, y-axis vibration.

<u>Vibrating wall, floor and frames</u>

- Reduce area
- Add mass
- Change stiffness
- Detune resonances
- Add damping material

<u>Gas or fluid flow vibrations</u>

- Use resilient pipe/duct connectors
- Use resilient pipe hangers and supports

<u>Equipment mount vibrations</u>

- Isolate sections with soft mounts
- Fasten external parts at vibration nodes
- Detune-avoid resonant buildup

<u>Source/receiver location</u>

- Position source or receiver at vibration nodes
- Change position of source or receiver or both
- Increase distance between source and receiver

MSIS-153

Reference: 295, Page 242

Figure 5.5.4.2-1. Control of Path Vibration

b. Crewmember Supports - The resonant frequency of crewmember supports should be one-half of the lowest vibration frequency of significance. Supports that can offer vibration protection are:

1. Contoured seats.
2. Contoured and adjustable couches.
3. Elastic seat cushions.
4. Suspension seats.
5. Body restraints.
6. Rigid or semirigid body enclosures.
7. Head restraints.
8. Vibration absorbent hand/foot pads.

Positioning crewmember stations on structure nodal points can alleviate demands on crewmember body support systems.

5.6 (THIS PARAGRAPH WAS NOT USED)

{ }

5.7 RADIATION

{A}

5.7.1 Introduction

{A}

Crewmembers in a space module will be exposed to both ionizing and non-ionizing radiation. Ionizing radiation, which breaks chemical bonds in biological systems, can have immediate (acute) as well as latent effects, depending on the magnitude of the radiation dose absorbed, the species of ionizing radiation, and the tissue affected. Non-ionizing radiation (consisting of different types of electromagnetic radiation) are generally not energetic enough to break molecular bonds in biological systems but, with sufficient intensity, can produce adverse biological effects. Ionizing radiation, which is discussed in Paragraph 5.7.2 is attributable mainly to natural, rather than manmade, sources in space. Non-ionizing radiation, which is discussed in Paragraph 5.7.3, is attributable primarily to manmade sources within the spacecraft.

5.7.2 Ionizing Radiation

{A}

5.7.2.1 Ionizing Radiation Design Considerations

{A}

5.7.2.1.1 Types of Ionizing Radiation

{A}

The ionizing radiation in space is comprised of charged particles, uncharged particles, and high-energy electromagnetic radiation. The particles vary in size from electrons (beta rays) through protons (hydrogen nuclei) and helium atoms (alpha particles) to the heavier nuclei encountered in cosmic rays, e.g., HZE particles (High Z and Energy, where Z is the charge). They may have single charges, either positive (protons, p) or negative (electrons, e), multiple charges (alpha or HZE particles); or no charge, such as neutrons. The atomic nuclei of cosmic rays, HZE particles, are usually completely stripped of electrons and thus have a positive charge equal to their atomic number.

The ionizing electromagnetic radiation consists of x-rays and gamma-rays which differ from each other in their energy. By convention X-rays have a lower energy than the gamma-rays with the dividing line being at about 1Merv. In general, x-rays are produced either by the interaction of energetic electrons with inner shell electrons of heavier elements or through the bremsstrahlung or braking radiation mechanism when deflected by the Coulomb field of the atomic nuclei of the target material. Gamma-rays are usually products of the de-excitation of excited heavier elements.

Ionizing radiations vary greatly in energy. Electromagnetic radiations have energy quanta determined by their wavelength or frequency. The energy of particulate radiation depends on the mass and velocity of the particles. Figure 5.7.2.1.1-1 summarizes the main types of ionizing radiation including

their charge, mass, and source.

5.7.2.1.2 Sources of Ionizing Radiation

{A}

Man in a space module will be subject to radiation emanating from two different kinds of sources: those occurring naturally in space and manmade sources. The naturally occurring space radiation environment is comprised of charged particles (and accompanying electromagnetic radiation) attributable to a number of distinct sources as shown in Figure 5.7.2.1.2-1. In terms of potential biological hazard, some of these sources produce particles that can be neglected because either the particle energy or flux density is too low. Thus, from a practical standpoint the radiation encountered in space may be attributed to three principal sources: geomagnetically trapped radiation, galactic cosmic radiation, and solar particle event radiation (also called solar cosmic rays). The galactic cosmic radiation is biologically important despite its lower density. Space radiation levels vary substantially both with time and with distance from the Earth. These temporal and spatial fluctuations must be taken into account in the planning of space missions if radiation exposures are to be held to an acceptable level. The three main sources of space radiation will be discussed separately.

For planning purposes the low inclination, low altitude earth orbit (LEO), the low altitude polar orbit (LPO), and the interplanetary orbit (IO) are representative of almost all future manned missions. Each of these orbits will be subject to a unique radiation environment. For the LEO one needs to consider only the lower edge of the radiation belt at the South Atlantic Anomaly (SAA), and galactic cosmic rays with energies above about 1 GeV. Since a spacecraft in LPO spends part of its time over the polar caps where the Earth's magnetic field is directly connected to the interplanetary magnetic field, its radiation

Name	Nature of radiation	Charge	Mass	Sources
X-ray	Electromagnetic	0	0	Primary: Solar corona, stars, galaxies, terrestrial atmosphere in auroral zone. Secondary: Spacecraft structure in some parts of the radiation belts, in the auroral zone, and in interplanetary space following some solar flares.
Gamma ray	Electromagnetic	0	0	Stars, galaxies, unknown sporadic sources, and spacecraft atmosphere.
Electron	Particle	-e	$1 m_e$	Radiation belts and auroral regions.
Proton	Particle	+e	$1840 m_e$ or 1 amu	Galactic cosmic rays, radiation belts, and solar flares.
Neutron	Particle	0	1841 me	Primary: Galactic cosmic ray atmospheric albedo neutrons. Secondary: Galactic cosmic ray interaction with spacecraft structure.
Alpha particle (helium nucleus)	Particle	+2e	4 amu	Galactic and solar.
HZE particle (heavy primary nuclei)	Particle	≥+3e	≥ 6 amu	Galactic and solar.

Reference: 19, Subnote 1 (1)

MSIS-154 REV. A

Figure 5.7.2.1.1-1 Sources and Characteristics of Electromagnetic and Particulate Ionizing Radiations in Space

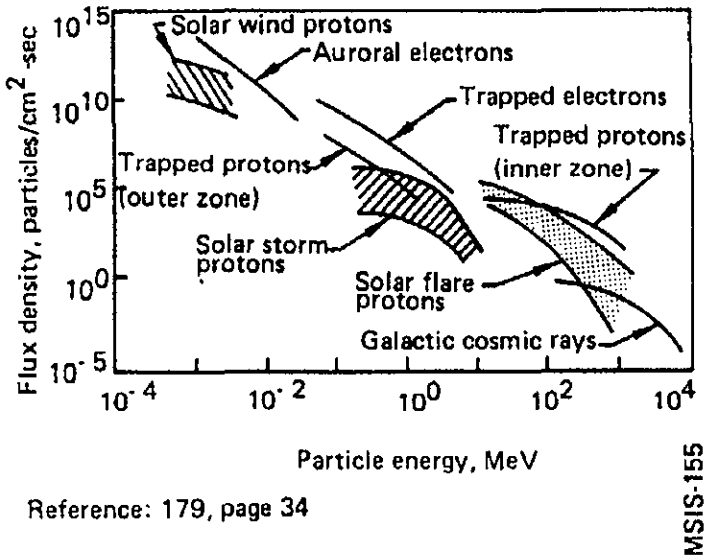

Reference: 179, page 34

Figure 5.7.2.1.2-1. Space Radiation Environment

environment will consist of about 60% SAA radiation and 40% galactic and solar cosmic rays. However, since a spacecraft in the low Earth orbit flies quite close to the Earth, the Earth acts as a large shield, protecting it additionally from solar flare and galactic radiation over roughly 2 pi steradians. In interplanetary space, on the other hand, any space craft will be exposed to both solar and galactic cosmic ray radiation over the full 4 pi steradian solid angle.

5.7.2.1.2.1 Trapped Radiation Belts

{A}

If only electrons are considered, there There are two belts of geomagnetically trapped radiation around the Earth. These belts, known as the Van Allen belts, are separated by a region of relatively low intensity. The inner belt consists of and high energy electrons, extends out to an altitude of approximately 12,000 km (6500 nm) and peaks at altitudes ranging from roughly 2000 - 5000 km (1100 - 2700 nm) depending on such factors as particle type (e or p), particle energy, solar cycle condition, shield thickness, etc. depending on such factors as electron energy, solar cycle conditions, shield thickness, etc.

Protons, on the other hand, form one uniform trapping region whose lower boundary is the earth's atmosphere at about 500 m while the outer boundary is the magnetopause between 36000 km and 67000 km. In this region the distance of the peak flux depends on the energy of the particles with the energetic protons peaking closer to the earth, while the low energy protons peak at the position of the electron slot. Within a distance of about 20000 km the Earth's magnetic field governing the dynamics of the radiation belts is mainly dipolar with smaller contributions from higher order terms. However, the dipole is also offset from the center of radiation belts come closest to the surface of the Earth at the location of the South Atlantic Anomaly (SAA) whose center lies roughly at 35 degrees east longitude and 35 degrees south latitude (see Figure 5.7.2.1.2.1-1). In this region, for a given altitude, the proton intensity exceeds the intensity measured at the same altitude at any other part of the globe. For trajectories of space vehicles of 30 degrees inclination from the equator or greater, there will be approximately five traverses through this SAA each day (see Figure 5.7.2.1.2.1-2). Experience with Earth orbital missions to date indicates that nearly all of the accumulated radiation exposure can be attributable to pas-

sage through the SAA.

The proton spectra and fluence are strong functions of altitude. At the higher altitudes, the greater portion of crew exposures is received during transits through the SAA as a result of greater trapped proton fluence levels. At lower altitudes, the protons in the SAA interact with the residual atmosphere. Some of the protons are lost and contribute to an anisotropic distribution of protons. Over a factor of two difference exists between the proton flux from the east compared to the flux from the west. The anisotrophy in particle flux will be an important factor for Space Station.

In addition to altitude, the integrated dose is a function of orbital inclination and solar cycle. Increases in solar activity expand the atmosphere and increase the losses of protons in LEO. Therefore, trapped radiation doses in LEO decrease during solar maximum and increase during solar minimum.

Trajectories of low inclination flights do not pass the regions of maximum intensities within the SAA. Although high inclination flights pass through the SAA maximum intensity regions, less time is spent in the SAA than low inclination flights. Thus crews in high inclination flights receive less net exposure to trapped radiation than in low inclination flights for a given altitude. Figure 5.7.2.1.2.1-1 depicts the location of the SAA. Low inclination flights will not transit the SAA south of 28.5 degrees south latitude and avoids the peak of the SAA. High inclination flights transit between North and South 58 degrees.

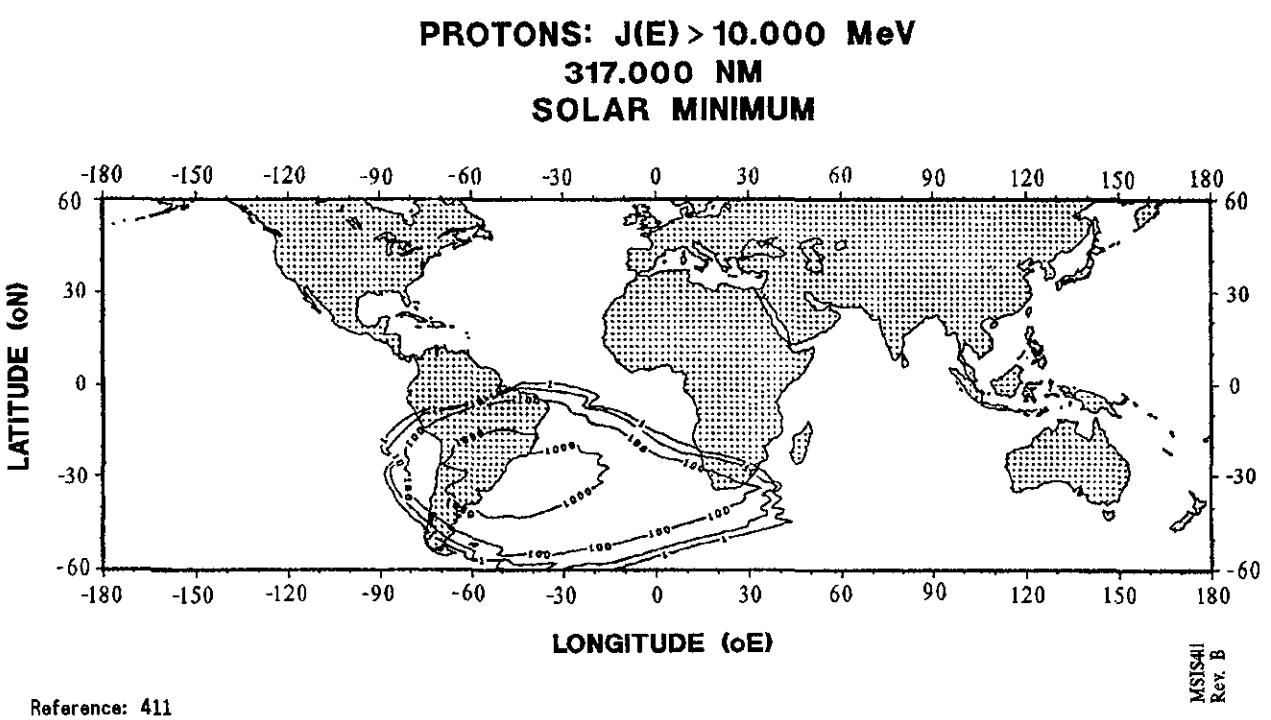

Figure 5.7.2.1.2.1-1 Trapped Radiation Belt Flux In The South Atlantic Anomaly For Protons Of Energy Greater Than 30 MeV Projected for STS-61, Hubble Repair Mission

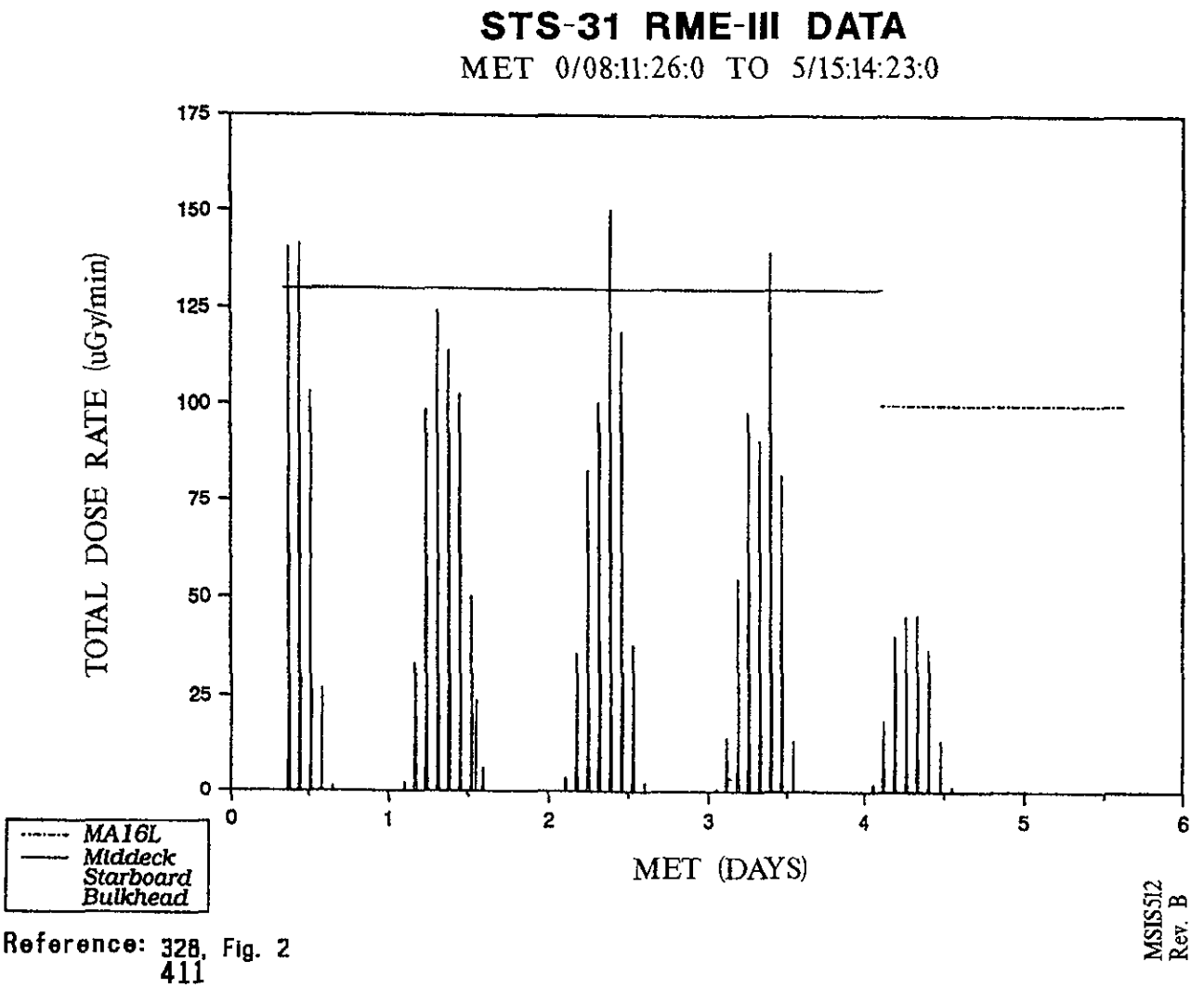

Reference: 328, Fig. 2
411

Figure 5.7.2.1.2.1-2 Variation of Dose-Rate Within A Low Earth Orbiting Spacecraft (28.5° inclination, 333 nautical miles)

5.7.2.1.2.2 Galactic Cosmic Radiation

{A}

Galactic Cosmic Radiation (GCR), frequently referred to simply as galactic radiation, originates outside the solar system. This radiation consists of atomic nuclei that have been ionized and accelerated to very high energies. Protons (hydrogen nuclei) constitute about 85% of this radiation; alpha particles (helium nuclei), about 13%; and heavier nuclei (HZE particles) from Z = 3 to approximately 30, the remaining few percent. (For specific tabulations of the major nuclei comprising the galactic cosmic rays see Reference 209). Actually, nuclei with atomic number Z greater than 30, the so-called ultra heavy nuclei, are also present, but at extremely low levels (their combined abundance is only about 10^{-4} of that of iron).

A distinction also exists between true galactic cosmic radiation originating from a cosmic ray source (CRS) outside the solar system and a component that seems to be part of the solar system and which has a much smaller HZE contribution.

The galactic cosmic radiation received on Earth varies substantially both as a function of the level of solar activity occurring at that time and as a function of position on the Earth's surface. Figure 5.7.2.1.2.2-1 shows the fluxes of different GCR components as a function of position on the Earth (geomagnetic latitude zero deg is equatorial, 90 deg is polar). The increase in the proton and alpha particle fluxes during the time of decreased solar activity (solar minimum) as compared to time of increased solar activity (solar maximum) is clearly shown.

For spacecraft, both the altitude of the vehicle and the inclination of the orbit are important in determining the radiation dose rate that would be received due to the GCR, as shown in Figures 5.7.2.1.2.2-2 and 5.7.2.1.2.2-3 Two figures are shown, one depicting the dose rate (in rads) to the crewmembers, and the other, the dose equivalent rate in rem, which is discussed in 5.7.2.1.3. The major effect, shown in the figures, is the

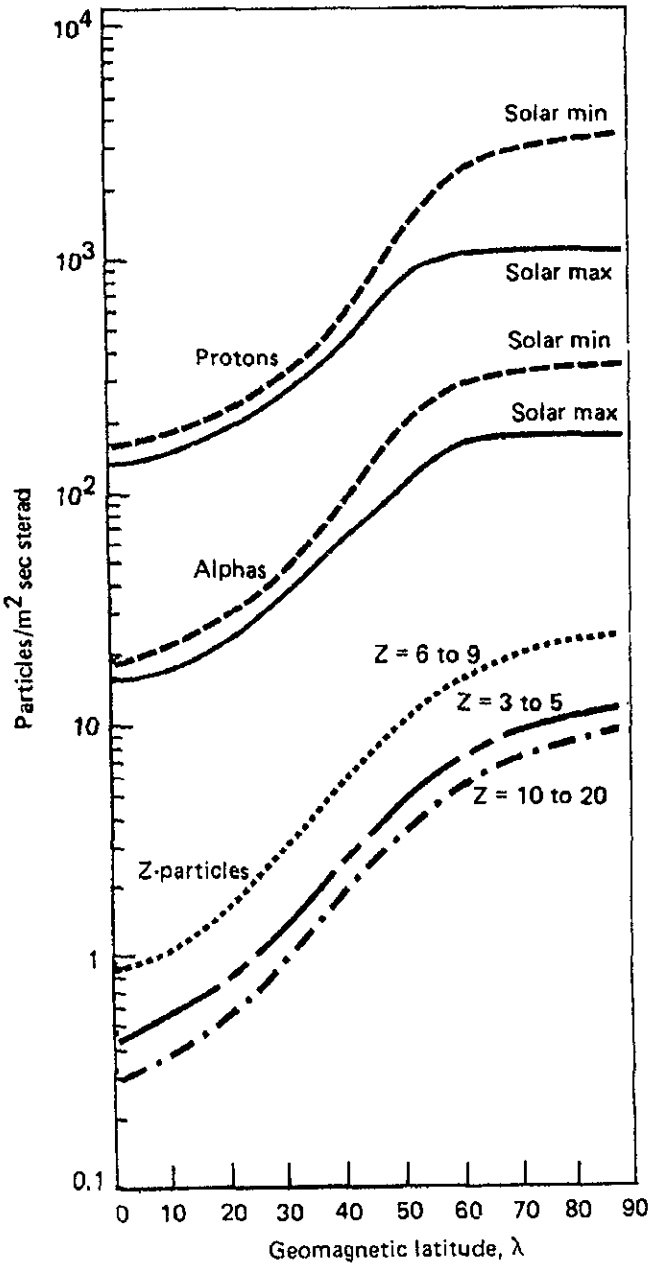

Reference: 78, page 2-119

Figure 5.7.2.1.2.2-1 Intensity of the Various Primary Components of the GCR Radiation as a Function of Geomagnetic Latitude

MSIS-158 REV A

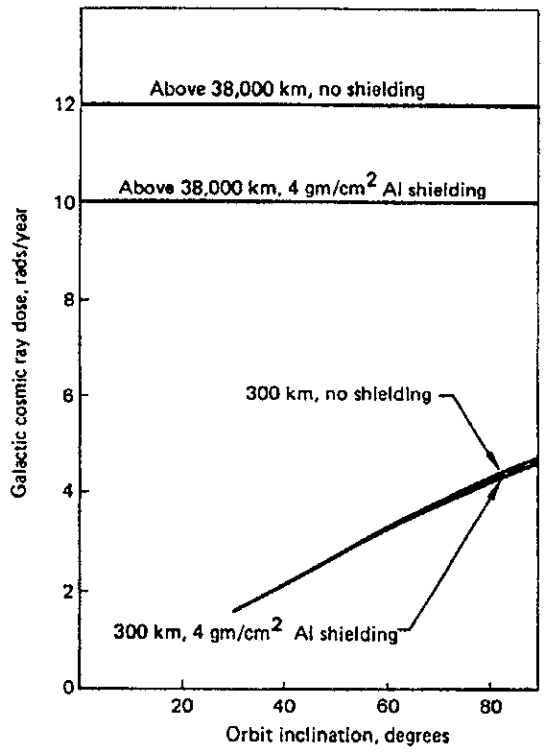

Reference: 330, Figure 11

MSIS-159 REV A

Figure 5.7.2.1.2.2-2 Galactic Cosmic Ray Dose Rate in Rads as a Function of Orbit Altitude and Inclination

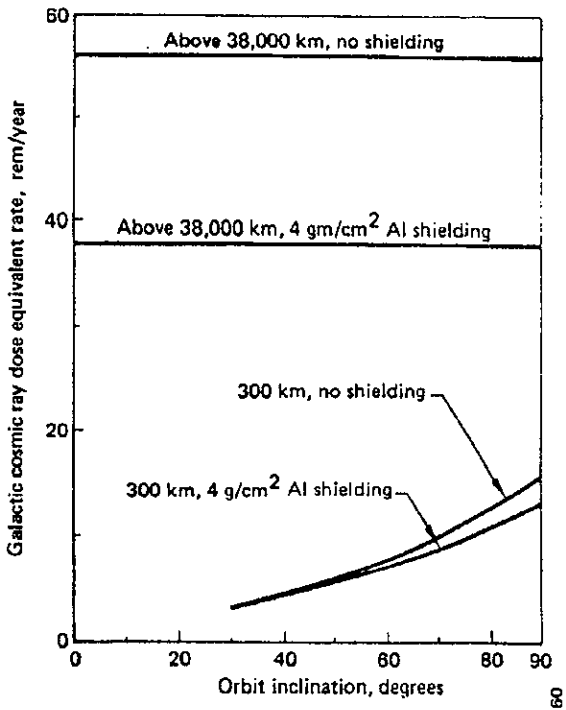

Reference: 330, Figure 11

MSIS-160 REV A

Figure 5.7.2.1.2.2-3 Galactic Cosmic Ray Dose Equivalent Rate, in Rem as a Function of Orbit Altitude and Inclination

shielding afforded by the Earth's magnetic field in deflecting the incoming charged particles of the GCR. For space modules in LEO, the 300 km (160 nm) orbit curves are applicable. At an altitude of about six Earth radii (approximately geosynchronous orbit) this geomagnetic shielding effect disappears.

5.7.2.1.2.3 Solar Cosmic Rays

[A]

Solar activity increases in rather regular 11-year cycles and is characterized by giant eruptions from the surface of the Sun termed "solar flares". Solar flares develop rapidly and generally last only 30 to 50 minutes, during which time intense electromagnetic radiation is emitted, along with energetic particles. However, the solar particles continue to arrive near the Earth for a few hours to several days after the visible activity has ceased. Only a fraction of the solar flares produce particles that reach the near-Earth vicinity.

These high-energy particles, consisting primarily of protons but also of alpha and HZE particles, are called solar cosmic radiation (SCR). Alternate terms used are solar energetic particles (SEP) and solar proton event (SPE) radiation. (Specific tabulations of the major nuclei comprising the SCR can be found in References 210 and 211.) A comparison between the GCR and SCR is shown in Figure 5.7.2.1.2.3-1.

The 11-year cycle of solar activity was first noted by 19th century astronomers on the basis of sunspots, and refined by them by reconstructing sunspot data back to the year 1749.

However, data on solar cosmic rays have only been collected since 1956, which corresponds to the beginning of cycle 19. Data indicates that about 30 to 50 major SCR events occur per cycle, most during the middle 5 years corresponding to solar maximum . This is illustrated in Figure 5.7.2.1.2.3-2 which displays integral solar proton fluence for the SCR events and the sunspot number for cycles 19 through 21. Figure 5.7.2.1.2.3-3 depicts solar

CRITERION	GALACTIC COSMIC RAYS	SOLAR COSMIC RAYS
Spatial distribution	Isotropic beyond terrestrial influence (no preferred direction of arrival)	Nonisotropic at onset, later becoming diffused through solar system
Composition	Approximately 85% proton, 13% alpha particles, remainder heavier nuclei, primarily of elements $Z \leq 26$, very small fraction $30 \leq Z \leq 92$	Almost all (96-99%) protons, some (1-4%) alpha particles, small, remainder (0.01-0.1%) heavier nuclei of elements $Z \leq 26$
Temporal variations	Permanent phenomenon, practically constant with time	Transient radiation, greatly variable with time
Energy	Extending to at least 10^{17} ev in some cases (much greater maximum than solar particles)	About 10^{10} ev highest recorded
Origin	Theories only; perhaps supernovae explosions in the galaxy	Active regions of flares on the sun
Flux density	Relatively low: about 2 particles/cm^2·sec of all energies	Very high: may be as high as 106 particles/cm^2 · sec
Biological effects	Primarily mutagenic with some vital cell destruction	Primarily acute damage; possible sudden illness; incapacitation, or death

Reference: 78, Page 2-113
210, Table 1, Figure 2

MSIS 161
Rev. A

Figure 5.7.2.1.2.3-1 Comparison of Galactic Cosmic Rays and Flare Produced Solar Cosmic Rays

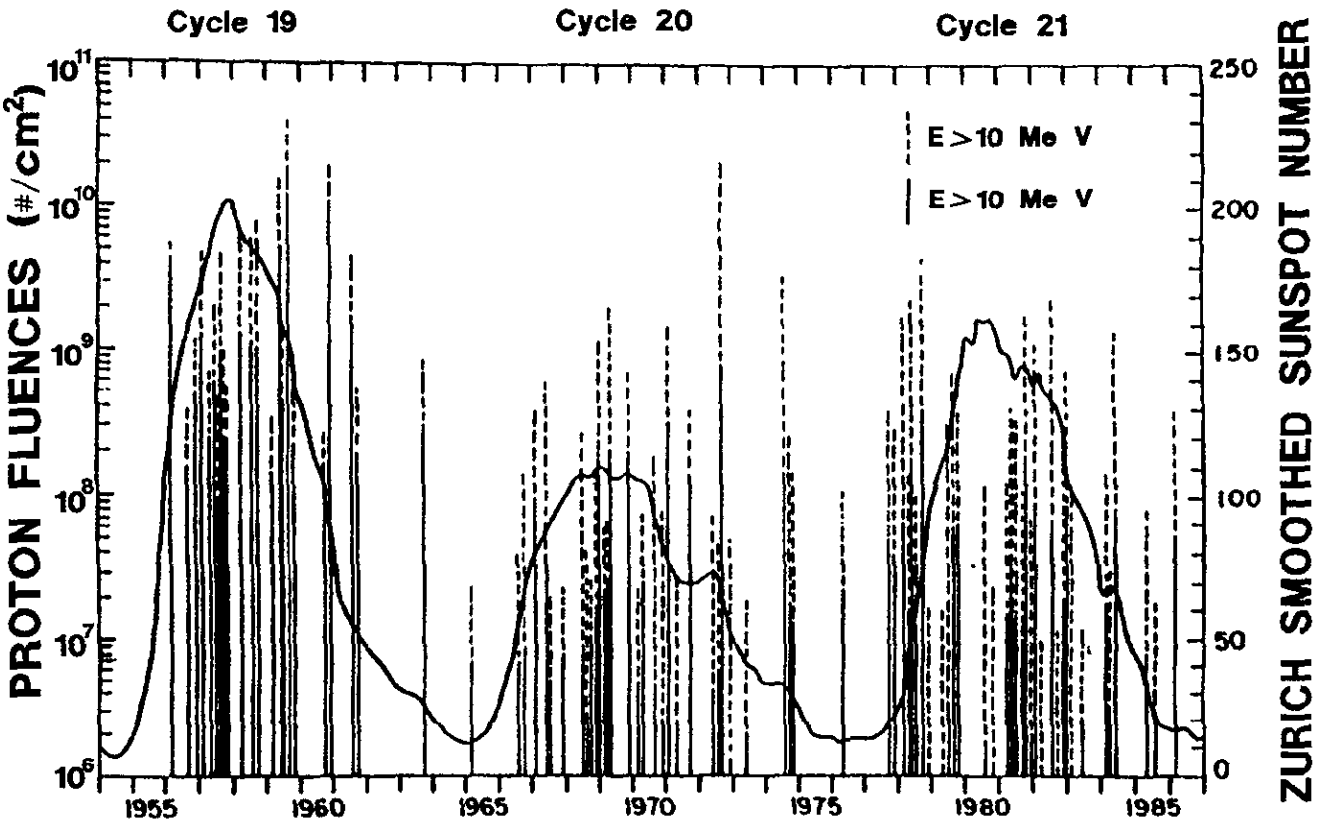

Reference: 411,413

Figure 5.7.2.1.2.3-2 Solar Activity and Solar Proton Events For Cycles 19, 20 and 21

MSIS521 Rev. B

proton events from 1956 through mid 1992. Several large events occurred at the beginning of cycle 22.

a. Cycle 19 was the most active cycle in terms of both SCR particle fluencies and sunspot number. A tabulation of the 16 largest flare-produced events of the cycle is shown in Figure 5.7.2.1.2.3-3 along with the calculated skin doses that these solar proton fluencies would produce.

b. The August 1972 event was the largest single recorded event, occurring during the more "ordinary" cycle 20. A plot of the calculated organ doses that these solar protons would have produced through 1 gm/cm2 (2 lb/ft^2) of shielding in free space is shown in Figure 5.7.2.1.2.3-4.

c. Cycle 21 appears to be more like cycle 19 than cycle 20, but produced neither the largest single event nor the highest cumulative proton fluency. Rather there are indications that the proton fluency over this cycle had a higher energy spectrum than during the two previous cycles.

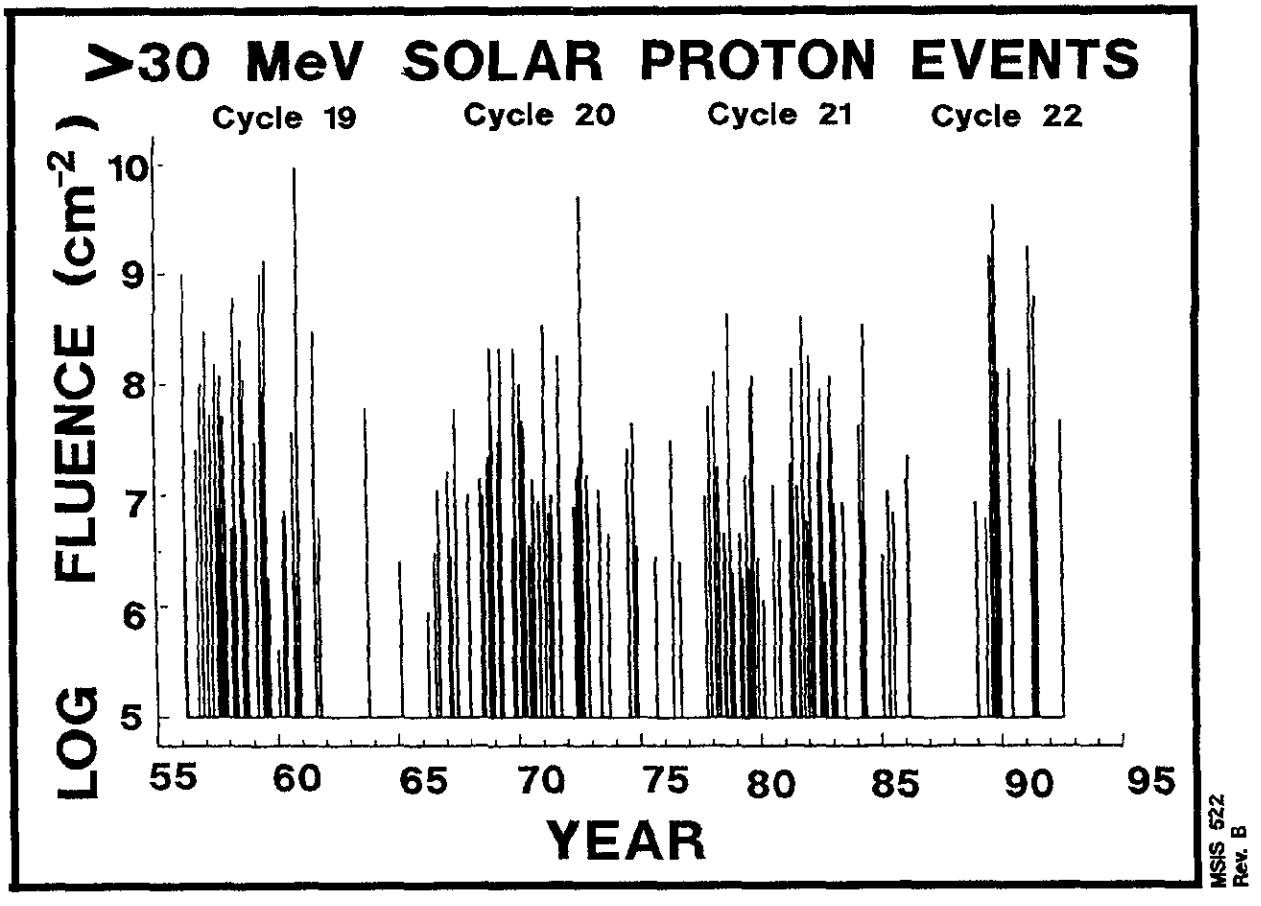

Reference: 412

Figure 5.7.2.1.2.3-3 Solar Proton Events from 1955 to 1992

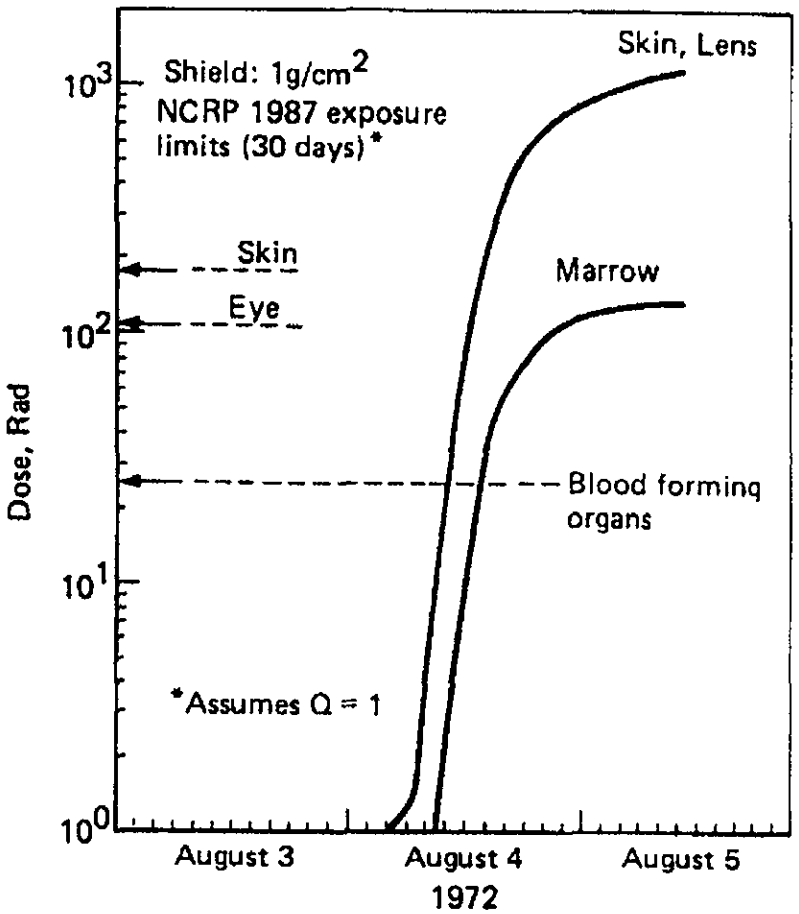

Reference: 179, Figure 16, page 57

MSIS-164 REV. A

Figure 5.7.2.1.2.3-4 Calculated Organ Doses From the August 1972 Solar Flare

5.7.2.1.2.4 Onboard Radiation Sources

{A}

Manmade radiation sources onboard space modules can be put into three main categories: electric power sources, small radiation sources, and induced radioactivity.

The electric power sources may be further categorized as either a radioisotopic source or a nuclear reactor, both favored because of their compact size, light weight, and long life. The most common isotopic power source is the radioisotopic thermoelectric generator (RTG), a static device that directly converts the heat given off by an isotope to electricity via a thermocouple junction. Most of the nuclear power sources that have been launched by the U.S. are RTGs, ranging from the first one, SNAP-3A, in 1961 to the multi-hundred watt RTGs on the Voyager spacecraft in 1977. The dynamic isotope power system (DIPS) is another radioisotopic power system that was developed but not flown.

Nuclear reactors can provide large quantities of power more efficiently than RTGs. A single reactor was launched, the 500 W SNAP-10A in 1965, but programs in the 1980s, such as SP-100, have shown renewed interest in reactors, especially as power sources for hundreds, or even thousands, of kilowatts. Such reactors will be highly radioactive during and after operation and require substantial shielding. For space modules such as a space station, they can be incorporated into the overall configuration in one of three general ways: rigidly attached reactors (onboard or boom-mounted), flexibly attached reactors (tethered), and free-flying reactors.

Other radiation sources onboard would be very small in comparison to an RTG or a reactor (in size and radioactivity) and would be easily shielded. Such sources might include calibration sources (for radiation monitoring instruments), machine and isotopic radiography sources, ionization sources (for smoke detectors), radiopharmaceuticals, and scientific and medical radioisotopes used in experiments.

The third category, induced radioactivity, refers to the fact that some materials in a spacecraft may become radioactive as a result of interactions with space radiation. An example is the activation by protons (inner trapped belts, galactic cosmic radiation, solar flares) of aluminum, composed of the stable isotope A1-27, to the radioactive isotope Na22. The aforementioned space proton fluxes are generally low enough that the induced radioactivity does not present a radiation problem.

5.7.2.1.3 Human Responses to Ionizing Radiation

{A}

Manned space flight requires consideration of the biological effects of radiation on man. Biological effects are categorized as either latent (delayed effects due to low doses acquired over long periods) or acute (immediate effects from high doses acquired over short periods). Each of these are discussed below after the following paragraph, which describes the units of measure used to describe biological damage by ionizing radiation.

5.7.2.1.3.1 Units of Measure Used to Describe Human Responses to IO

{A}

a. Dose (D) - The amount of radiation energy absorbed by tissue is measured in rads (100 ergs of energy per gram of material). The currently used SI unit for dose is the gray (Gy), which is defined as 1 Gy = 100 rads.

b. Dose Equivalent (DE) - The amount of biologically damaging ionizing radiation is measured in terms of rem (roentgen equivalent man). It is defined as the product of the absorbed dose (D), in rad, and the quality factor (Q).

$$DE = D\ (Q)$$

The currently used SI unit for dose equivalent is the sieviert (Sv), which is defined as 1 Sv = 100 rem and equals dose in Gy times Q.

c. Quality Factor (Q) - The quality factor is an artificial factor dependent on the linear energy transfer of the radiation by means of which biological effects resulting from absorbed doses of different types of radiation may be related to X- and gamma-radiation doses. Figure 5.7.2.1.3.1-1 presents current Q factors for a number of different types of radiation.

As a given particle degrades in tissue, the Q will rise as its energy transfer per micrometer (see definition of LET below) rises. For a beam of protons having a wide range of energies, the average Q tends to drop with increasing depth in tissue as the lower energy component tends to be removed with increasing depth and the high-energy component continues its traversal.

The standard Q values are based on the most detrimental chronic biological effect (e.g., carcinogenesis by neutrons) for continuous low-dose exposure that might be met in industrial situations. However, the Q for many acute high dose rate exposures may be very much lower.

For this reason, recognized committees of radiation experts are currently reevaluating the data upon which the Q values are based and are likely to revise these Q factors.

Type of radiation	Qualtiy factor, Q
X-rays	1
Gamma rays and bremsstrahlung	1
Beta particles, electrons, 1.0 MeV	1
Beta particles, 0.1 MeV	1
Neutrons, thermal energy	2.8
Neutrons, 0.0001 MeV	2.2
Neutrons, 0.005 MeV	2.4
Neutrons, 0.02 MeV	5
Neutrons, 0.5 MeV	10.2
Neutrons, 1.0 MeV	10.5
Neutrons, 10.0 MeV	6.4
Protons, greater than 100 MeV	1-2
Protons, 1.0 MeV	8.5
Protons, 0.1 MeV	10
Alpha particles (helium nuclei), 5 MeV	15
Alpha particles, 1 MeV	20

Reference: 92, Table 9-1

MSIS-165

Figure 5.7.2.1.3.1-1. Quality Factor for Various Types of Radiation

d. Relative Biological Effectiveness (RBE) - A related but distinctly different term from Q, is the RBE, (relative biological effectiveness) which is based solely on experimentally determined effects of different types of radiation on biological systems.

e. Linear Energy Transfer (LET) - The LET denotes the rate of energy dissipation along the path of a charged particle. There are actually three LET equivalent terms in use:

1. LET in units of kev/micron (kev per micrometer of tissue).

2. dE/dx in units of Mev/cm, and therefore dE divided by dx = 10 LET.

3. dE/dz, in units of Mev cm^2/gm of tissue, which is dE/dx divided by the density of the tissue.

The dependence of Q on the LET is seen in Figure 5.7.2.1.3.1-2.

For a beam of charged particles, the dose at a point in a medium is proportional to the fluency of particles at the point multiplied by the linear energy transfer (LET) divided by the density of the medium.

5.7.2.1.3.2 Late Effects of Ionizing Radiation

{A}

In the beginning of the manned space program, the focus had been on acute, non-stochastic effects (direct tissue damage) of ionizing radiation on specific organs. More recently, much attention is being paid to the latent, stochastic effects (cancer and genetic effects) of low-level doses. The current limits are based on recommendations for Scientific Committee 75 of the National Council on Radiation Protection and Measurements (NCRP) that were outlined in their Report 98, "Guidance on Radiation Received in Space Activities", July 31, 1989.

The crewmember career limit is based on the delivered dose equivalent to three body organs: eye (3 mm depth) skin (0.1 mm depth) and blood forming organs (BFO, 5 cm depth). The career depth dose - equivalent

Unrestricted linear energy Transfer, L in water (kev/µm)	Quality Factor $Q(L)$
< 10	1
10 -100	$0.32L-2.2$
> 100	$300/\sqrt{L}$

Reference: 329, Fig.1 pg.26
416

MSISS16 Rev. B

Figure 5.7.2.1.3.1-2 Values of Quality Factor as a Function of radiation LET, L, expressed in kev/µm

limit is based upon a maximum 3 percent lifetime excess risk of cancer mortality. The total dose-equivalent yielding this risk depends on sex and age at start of exposure. The career dose-equivalent limit is approximately equal to:

200 + 7.5 (age - 30) rem for males up to 400 rem maximum

200 + 7.5 (age - 38) rem for females up to 400 rem maximum

The recent recommendations incorporated a new philosophy to consider the age and sex of the individual being exposed. This was in recognition that organ radiosensitivities vary with an individual's age. Therefore, it is necessary to couple the exposure received with the organ radiosensitivities of the individual at that point in their lifetime to determine the actual risk incurred. Likewise, the sex of the exposed individual must be considered since radiosensitivities vary by sex.

The difference between male and female career limits represents the difference in radiosensitivities between the genders. Each career limit provides the same level of risk protection to both genders, i.e. 3% excess lifetime cancer mortality risk.

Previous career limits were based on earlier data from the atomic bomb survivors database that estimated the mortality risk of 6 X 10^{-5} mortality/rem. The basis of the current career limits places the risk on the order of 2 X 10^{-4} mortality/rem. The risk for genetic risk is estimated to be approximately half, 1 X 10^{-4} defects/rem. A more complete analysis of these risk factors may be found in NCRP Report 98.

Since Report 98 was compiled and issued, more data from the atomic bomb survivors has become available. Preliminary analysis indicates that lifetime mortality risk factors are greater than those used to develop the recommendations presented in NCRP Report 98. Lower career limits are likely to be recommended in the near future as this data is analyzed by NCRP Scientific Committee 75.

5.7.2.1.3.3 Acute Effects of Ionizing Radiation

{A}

Because of the possibility of high radiation doses to crewmembers due to unpredictable events (e.g., solar flares, emergency repairs on nuclear power sources, etc.), the effects of acute radiation doses will be discussed in some detail. This extends all the way to lethal doses, commonly expressed as **LD50** i.e., the radiation dose that is expected to kill 50% of an exposed population.

Despite the excellent record of very low crewmember doses to date, consideration of acute doses is also important because future space programs will involve much longer stays and orbits higher into the trapped belts. Aside from 2-8 rem on the long-duration Skylab missions, crewmember dose equivalents have been very much less than 1 rem. The strong dependence of crewmember dose with orbit altitude can be seen in Figures 5.7.2.1.3.3-1 and 5.7.2.1.3.3-2. These plots depict actual crew dose rates in the crew compartment of the space shuttle for different inclinations as a function of mission altitude. Also shown in the figures are the results of corresponding calculations that used the AP8 trapped-belt proton environment model.

In the following paragraphs, acute whole-body irradiation effects, effects on specific organs, and performance degradation effects are discussed:

5.7.2.1.3.3.1 Whole-Body Irradiation Effects

{A}

Figure 5.7.2.1.3.3.1-1 presents the expected early effects of acute whole-body irradiation. It should be emphasized that these thresholds do not hold true for partial body and protracted radiation of the same total dosage. They do not cover exposure to simultaneous environmental stress of other types.

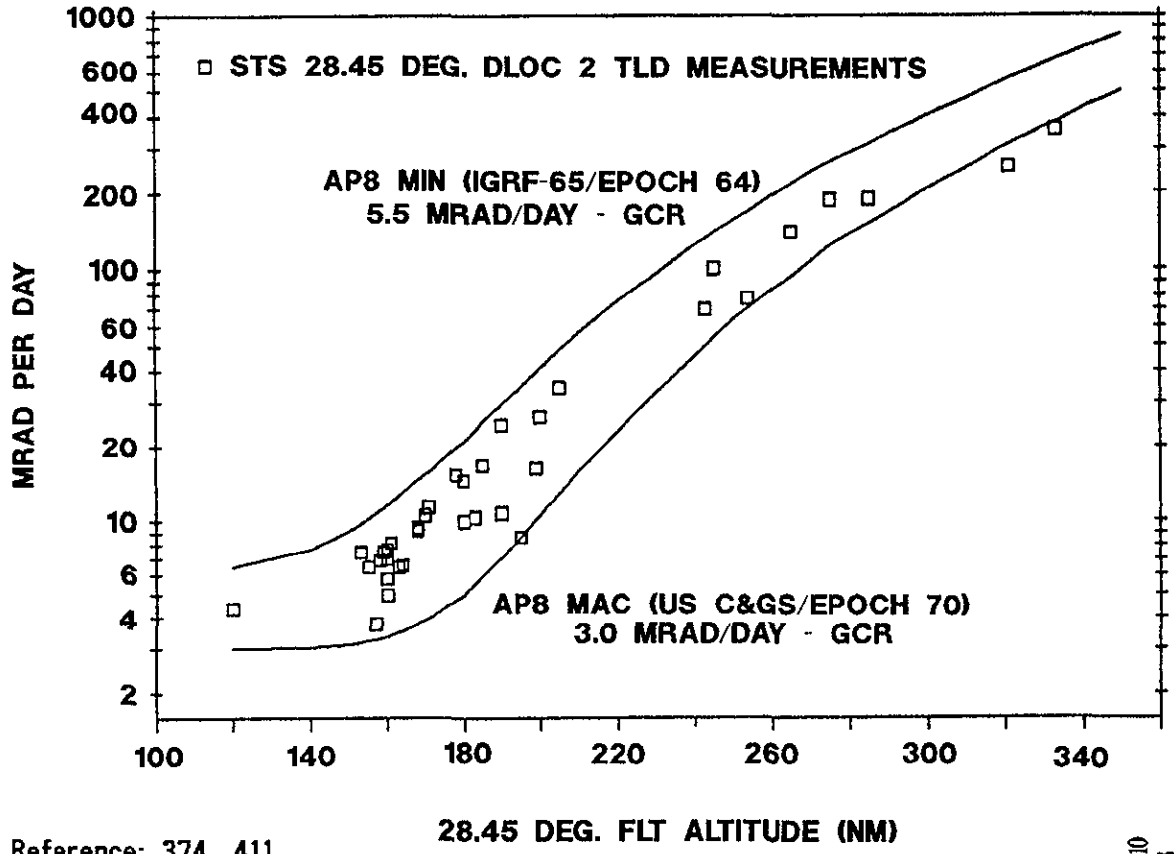

Reference: 374, 411

MSISS10 Rev. B

Figure 5.7.2.1.3.3-1 Measured Daily Absorbed Dose Rates Inside Shuttle Crew Compartment (DLOC 2 - Dosimeter Location 2)

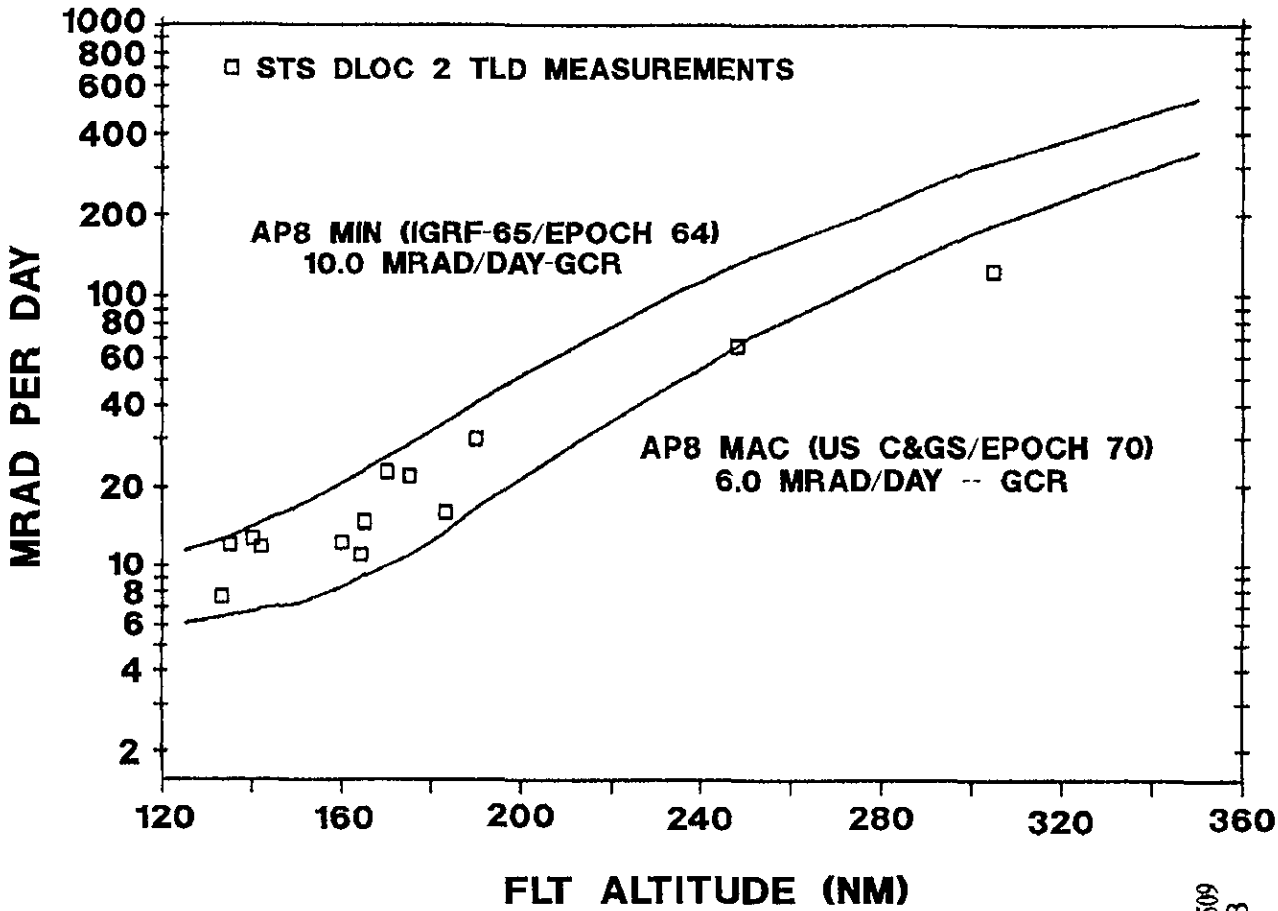

Reference: 374, 411

MSIS509 Rev. B

Figure 5.7.2.1.3.3-2 High Inclination Orbits Compared With Calculated Values (AP8 Model) for Solar Min and Solar Max

Dose in rads	Probable effect
0 to 50	No obvious effect, except, possibly, minor blood changes and anorexia.
50 to 100	Vomiting and nausea for about 1 day in 10 to 20% of exposed personnel. Fatigue, but no serious disability. Transient reduction in lymphocytes and neutrophilis.
100 to 200	Vomiting and nausea for about 1 day, followed by other symptoms of radiation sickness in up to 50% of personnel; < 5% deaths anticipated. A reduction of approximately 50% in lymphocytes and neutrophils will occur.
200 to 350	Vomiting and nausea in 50 to 90% of personnel on first day, followed by other symptoms of radiation sickness, e.t., loss of appetite, diarrhea, minor hemorrhage; 5 to 90% deaths within 2 to 6 weeks after exposure; survivors convalescent for about 3 months.
350 to 550	Vomiting and nausea in most personnel on first day, followed by other symptoms of radiation sickness, e.g., fever, hemorrhage, diarrhea, emaciation. Over 90% deaths within 1 month; survivors convalescent for about 6 months.
550 to 750	Vomiting and nausea, or at least nausea, in all personnel within four hours from exposure, followed by severe symptoms of radiation sickness, as above. Up to 100% deaths; few survivors convalescent for about six months.
1000	Vomiting and nausea in all personnel within 1 to 2 hours. Probably no survivors from radiation sickness
5000	Incapacitation almost immediately (several hours). All personnel will be fatalities within one week.

Reference: 9, Table 3-36, page 3-47

MSIS-168 REV A

Figure 5.7.2.1.3.3.1-1 Expected Early Effects From Acute Whole Body Radiation on Earth

The latency periods and relative duration of symptoms are dependent upon the penetration, quality factors, total dose, dose distribution, and intensity of the exposure.

Figure 5.7.2.1.3.3.1-2 represents the mean survival time of man versus the acute radiation dose of whole-body radiation. The major cause of death is indicated for each dose range.

5.7.2.1.3.3.2 Gastrointestinal or Precursor Effects

(A)

These symptoms include nausea, vomiting, and diarrhea. These may appear within an hour or two and subside within a day at any dose above about 50 - 100 rads.

After a short latent period, a feeling of fatigue is followed by depression and emotional disturbance accompanied by anorexia, nausea, retching, salivation, and vomiting. Intestinal cramps and diarrhea occur early at lethal doses. Symptoms reach a peak in about 4 to 6 hours and then improve rapidly. For 200 and 300 rads the peak may occur as quickly as two hours after exposure. The degree of upset and duration of recovery depend on the size and location of dose, on individual sensitivity and, most importantly, on the dose rate.

The time of onset of the precursor symptoms of nausea and vomiting, empirically derived, may be seen in Figure 5.7.2.1.3.3.2-1. It is based on data from atom bomb casualties, nuclear accident victims, and the irradiation of cancer patients.

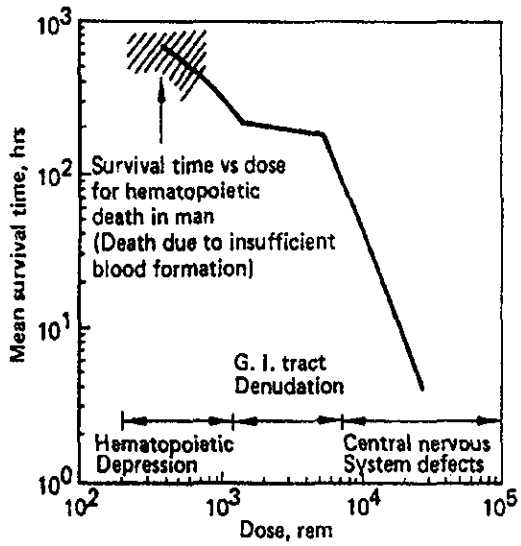

Reference: 9, Fig. 3-37

Note: This curve vs. extrapolated from animal studies and very few human studies. This data holds only for acute total body radiation.

MSIS-169 REV A

Figure 5.7.2.1.3.3.1-2 Relationship Between Mean Survival Time and Acute Radiation Dose for Man

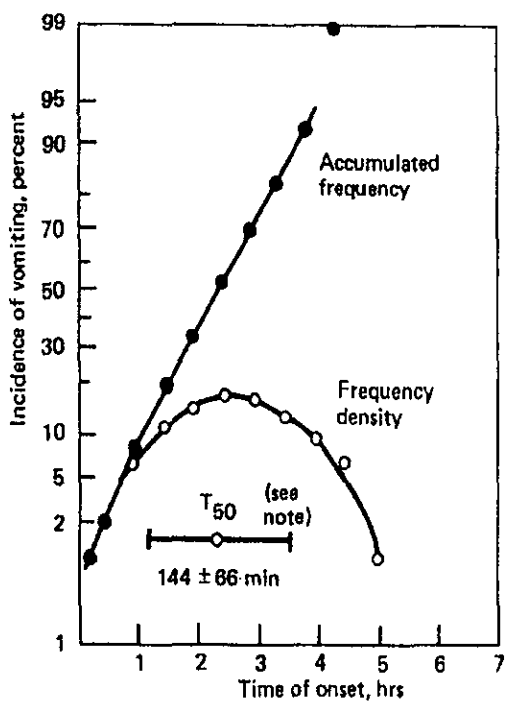

MSIS-170 REV A

Reference: 9, Fig. 3-41

Note: T50 = Onset time for 50% of exposed population

Figure 5.7.2.1.3.3.2-1 Anticipated Elapsed Time Between Irradiation and Onset of Severe Nausea and Vomiting in a Sample of 100 Persons Exposed to Lethal Level Radiation Doses

The dose response may be probablistically treated as a symptom dose affecting a specified fraction of an irradiated population, e.g., ED50 is the dose producing the symptom in 50% of an irradiated population. Figure 5.7.2.1.3.3.2-2 gives the extrapolated ED10, ED50, and ED90 doses based on x-ray and gamma-ray experiments and should be considered conservatively, having higher ED values and a wider range of distribution than would be expected in a normal population.

5.7.2.1.3.3.3 Hematological Effects

{A}

Acute hematopoietic (blood producing) symptoms, i.e. thrombocytopenia (lack of platelets), leukopenia, (lack of white blood cells), hemorrhage, and accompanying infection. These symptoms will appear within a few days to a week and can reach a clinically aggravating level at doses of 50 - 150 rads or more to the marrow within several weeks to a month.

Effects on the blood system due to radiation are largely dependent on damage to the marrow and lymphoid tissue. Damage to the cell inhibits normal division and reproduction of the elements, resulting in decreased blood counts.

Signs and symptoms then develop relating to the depletion of various elements of the blood. These symptoms include infections and fever relating to the depression of white blood cells and impairment of the immune system. Other symptoms include bleeding and anemia relating to platelet depression. These symptoms may lead to death if the bone marrow is incapable of responding in time by adequate cell regeneration.

The changes with time in most of the affected blood elements are fairly well correlated with the radiation dose to the bone marrow. Based on the dose relationship of these changes, the following four stages or prognosis may be made, corresponding to the four levels of radiation dose:

a. Almost certain survival - dose of less than 100 rads.

b. Probable survival - dose of 100 - 200 rads.

Clinical sign	Absorbed dose for probability of response (rads)		
	10 percent	50 percent	90 percent
Anorexia	40	100	240
Nausea	50	170	320
Vomiting	60	215	380
Diarrhea	90	240	390

Reference: 9, Table 3-41

MSIS-171 REV A

Point of interest for dose estimate: a 26-cm diameter sphere in the mid-epigastric region; Q assumed to be unity.

Figure 5.7.2.1.3.3.2-2 Estimated High Intensity Radiation Dose Levels Producing Early Prodromal Responses

c. Possible survival - dose of 200 - 500 rads.

d. Improbable survival - dose greater than 500 rads.

Experimental evidence has shown the important role played by the three key blood elements: lymphocytes, neutrophils, and platelets. The changes are represented as percentages of normal counts. The dose levels producing a specified blood element reduction are shown in Figure 5.7.2.1.3.3.3-1.

5.7.2.1.3.3.4 Skin Tissue Effects

{A}

Widespread erythema (redness) and skin blistering are the primary effects of ionizing radiation on skin tissue. Under certain circumstances, such as EVA operations, high-intensity surface exposure with little deep tissue dosage may occur. Depending on the quality of the radiation, erythema will appear within a few hours to days following exposures of 400 to 800 rads. Due to the restrictions and abrasive contacts of the space suit, even a partial body moderate erythema could become extremely uncomfortable and somewhat incapacitating.

Figure 5.7.2.1.3.3.4-1 shows the air dose-response of the skin for these early symptoms following doses of x-rays. The skin reactions with adequate statistical data to make population dose response projections are erythema and moist desquamation. The statistical projections for these skin reactions are summarized in Figure 5.7.2.1.3.3.4-2.

5.7.2.1.3.3.5 Reproductive Cell Effects

{A}

The sterilizing effect of radiation on reproductive cells will not affect the success of a specific space mission, but may have a second- order, even first-order, psychological bearing on crew effectiveness during the whole program. Due to the high radiosensitivity of the sex cells lining the reproductive organs, the gonads are among the more sensitive organs of the human body. Figure 5.7.2.1.3.3.5-1 shows the expected dose-response relationship for male sterility obtained from experience with electromagnetic radiation.

Circulating element	Absorbed dose for reduction from normal (rads) **		
	25 percent	50 percent	75 percent
Platelets ***	50	120	250
Lymphocytes ***	60	150	300
Neutrophils ***	80	190	390

Reference: 9, Table 3-44

* Symptoms appear within 1 to 10 days after bone marrow exposure.
** Point of interest for dose estimation average depth of 5 cm: Q assumed to be unity.
*** ~ 3, 25, and 30 days, respectively, for lymphocytes, neutrophils, and platelets.

MSIS-172 REV A

*Figure 5.7.2.1.3.3.3-1 Estimated High Intensity Radiation Dose Levels to Produce Specified Percentage Reduction in Blood Elements **

Epilation - loss of hair	Erythema (first degree burns)	Moist desquamation and blistering (second degree burns)	Ulceration (third degree burns)
Rare at less than 200 r			
Partial epilation at 350-450 r	Response is dependent on energy, dose rate, area exposed, and complexion of the individual. Full effect in 1 to 3 weeks after:		
Complete epilation in 16-18 days at > 450 r	200-400 r (<150 keV)		
	500-600 r (200-400 keV)		
Permanant epilation at > 700 r	800-1000 r (>400 keV)		
	Response in first hours at 1000 r	Effect in 1-2 weeks at > 1000 r	Rapidly progressive effect at > 2000 r

Reference: 9, Table 3-41

* These statements are based on air doses. Dose estimates are at 0.1 mm depth where 1 r ≅ 1 rad.

MSIS-173 REV A

Figure 5.7.2.1.3.3.4-1 Radiation Damage to Skin

Skin reaction	Absorbed dose for probability of response (rads)		
	10 percent	50 percent	90 percent
Erythema	400	575	750
Desquamation	1,400	2,000	2,600

Reference: 9, Table 3-41

An overall modifying factor (Q_E) weighted for LET should be applied to the dose values given here ($Q = 1$ for LET ≤ 3.5 KeV/μ, $Q = 3$ for LET > 3.5 KeV/μ). An area effectiveness factor of 1.25 is suggested to reduce the dose value given here when exposure involves skin areas up to or greater than 150 cm^2.

MSIS-174 REV A

Figure 5.7.2.1.3.3.4-2 Estimated Doses of High Intensity Radiation ($Q = 1$) at 0.1 mm Depth of Producing Erythema and Desquamation of the Skin

Dose	Response
15-100 rad	Progressive reduction in fertility with dose reduced sperm count (oligospermia) and increased frequency of abnormal sperm. Above 100 rads, azoospermia is usually evident at 10 weeks.
200-300 rad	Temporary, absolute sterility (azoospermia) for approximately 12-15 months after 10 weeks.
400-600 rad	Temporary sterility for 18-60 months.
> 600 rad	Probably permanent sterility

Reference: 9, table 3-52

MSIS-175 REV. A

Figure 5.7.2.1.3.3.5-1 Radiation Damage to Testes

5.7.2.1.3.3.6 Performance Degradation Effects

{A}

Degradation of general operational skills through direct and indirect physiological and neurological injury include lassitude and accompanied by nebulous symptoms of reduced performance capacity interfering with information processing, decision making, emotional stability, and motivation, often related to the prodromal symptoms described above. At higher doses, vascular shock, cerebral edema (swelling of the brain), and hypoxia (lack of oxygen) of the central nervous system, all contribute to the effects often referred to as the "central nervous system syndrome".

Performance testing of monkeys before, during, and after irradiation to high dosages has shown a transient decline and subsequent recovery of one type of task and successful performance for other tasks. A slower reaction time was exhibited by animals given the highest exposures (greater than 750 rads).

5.7.2.1.3.4 Biological Effects of HZE Particles

{A}

High-energy HZE particles pose a special concern. First, when a single HZE particle slows down and stops in tissue, it forms a microlesion in which many cells are destroyed in a diameter of 10 - 50 Angstroms. An outer sheath, extending out to 10 Angstroms, has injured or slightly irradiated cells. This microlesion is a unique damage mechanism whose effect cannot be predicted based on the known effects of low- and high-LET radiation. Secondly, it is known that heavy ions are carcinogenic but their relative effectiveness is not well known. What is known is that the flux of HZE particles in space is low. There is still great uncertainty as to how large a risk these particles (and Fe56, in particular) pose to humans in space.

5.7.2.1.4 Ionizing Radiation Protection Design Considerations

{A}

Because crewmembers will encounter radiation in space from the sources listed in Paragraph 5.7.2.1.1, a variety of strategies need to be considered for protecting them from the radiation hazards.

The first strategy is to set for each mission the applicable exposure limits based on the NASA radiation dose limits set in Paragraph 5.7.2.2.1 and consistent with the mission objectives.

After this primary strategy, there are four main methodologies available: 1) bulk mass shielding, 2) active electromagnetic shielding, 3) chemical protectors, and 4) avoidance of high radiation fluxes by maneuvering of the spacecraft and careful scheduling of activities. Each of these methods is discussed below.

5.7.2.1.4.1 Mass Shielding

{A}

This is the main means of protecting crewmembers from space radiation. Space modules are constructed with an outer skin and associated structural members and sometimes an outer micrometeoroid/ space debris shield. In addition, the space module contains specialized equipment with considerable mass as well as having internal structural features (e.g., walls, cabinets). These internal features can provide some additional shielding, but in only some specific directions as these masses are not distributed uniformly and/or isotopically.

The primary structural material used on spacecraft is aluminum, which is an effective shielding material for all types of radiation. However, some materials shield certain types of radiation even better. For example, low atomic number materials (e.g., polyethylene) provide good protection from electrons; high atomic number materials (e.g., lead) provide good protection from bremsstrahlung radiation. Thus, use of specialized individual or composite materials may be considered for localized radiation shielding applications.

In addition to attenuating the primary incoming radiation, the shielding material can also produce secondary radiation due to its interaction with the incoming radiation. The production of bremsstrahlung by electrons penetrating a shield is a typical example. Incident protons present a more complex example, involving both secondary protons (from cascades of proton-shield nuclei interactions, and from evaporation off of recoiling nuclei) and secondary neutrons (evaporation off of recoiling shield nuclei). Even though the neutrons are less energetic than incident protons, neutron attenuation in the shield, which is governed by neutron interaction mechanisms, is weaker than proton attenuation. Furthermore, the quality factor Q for neutrons can be considerably higher than for protons (e.g., see Figure 5.7.2.1.3.1-1). While secondary radiation needs to be accounted for, in most cases involving "thin shields" (gm/cm^2), the primary radiation is the predominant contributor to the total dose rate.

5.7.2.1.4.2 Electromagnetic Shielding

{A}

Four different concepts for providing electromagnetic shielding to deflect the charged particles have been proposed. These include: 1) an electrostatic field, 2) a plasma shield, 3) a confined magnetic field, and 4) an unconfined magnetic field.

All of these concepts are deemed impractical. They have the distinct disadvantages of excessive weight and power penalties (some studies have given estimates on the order of 10^8 to 10^9 kg). Other disadvantages are 1) the extreme complexity of the design, manufacturing, installation, and maintenance; 2) they are not necessarily fail-safe; and 3) may have adverse biological effects of chronic exposure to the high field strengths. Moreover, these magnetic fields will lead to a trapped radiation belt around the space module.

5.7.2.1.4.3 Chemical Protectors

{A}

The use of chemicals with the ability to modify radiation response of mammalian cell systems should be considered. The most effective of these are the sulfhydryl compounds. The simplest of these is cysteine. Sulfhydryl compounds are efficient protectors for low-LET radiation, however, they can have deleterious side effects and they have minimal effect on high-LET radiation. The mechanism by which sulfhydryl compounds are thought to function is that of scavenging free radicals in the body. Radiation interacts with biological cell systems by transferring energy to electrons, which eventually produce free radical molecules. The latter combine with oxygen in the cells to form highly reactive products that eventually break chemical bonds. The sulfhydryl compounds block the process by reacting with the free radicals in competition with oxygen.

Animals injected with cysteamine before being irradiated with x-rays have shown a dose reduction factor of 1.8. However, the sulfhydryl compounds as well as newer compounds developed at Walter Reed Hospital have been of limited usefulness for protecting humans despite continuing research being carried out in the United States and the Soviet Union.

5.7.2.1.4.4 Avoidance of High Radiation Fluxes

{A}

The intensity of space radiation varies widely with respect to time and location. Thus, crewmembers can be protected from some types of radiation by adjusting orbits and by carefully scheduling activities.

For low Earth orbits, the higher the altitude, the higher the fluxes of the trapped belt radiation, as can be seen in Figure 5.7.2.1.3.3-1. As seen in this figure, the increase of radiation flux is strongly dependent on altitude, so orbit adjustments must depend on knowing in which direction it is advantageous to move to decrease the radiation exposure.

Time scheduling could involve such factors as trapped belt and galactic cosmic radiation variations. A simple example of judicious scheduling in low inclination, low Earth orbits is to not schedule EVA activities for those few orbits per day (e.g., 5 to 6 out of 15 to 16 orbits) which will pass directly through the South Atlantic Anomaly. This is clearly shown in Figure 5.7.2.1.2.1-2, which presents the variation in absorbed dose per orbit over a five-day period, and depicts the daily 12 to 15-hour duration over which no dose is acquired since those orbits avoid the SAA.

5.7.2.1.4.5 Radiation Fields in Polar and Geosynchronous Orbit

{A}

Geosynchronous (GEO) and polar (PEO) Earth orbits are accessible to both solar and galactic cosmic rays, so other considerations are required to avoid and/or design for the high radiation fields these missions encounter. The major radiation threat is from solar cosmic rays (SCR, essentially all protons) emitted during solar particle events (SPEs). Since SPEs occur randomly, usually during the middle five years of an 11-year solar cycle (see Paragraph 5.7.2.1.2.3), the major reliance has to be on radiation monitoring to provide advance warning to the crew, and a "storm shelter" of adequate shielding thickness to protect the crew during the duration (up to 1-2 days) of the event. GEO orbits are totally accessible to SCRs because the shielding effect of the Earth's magnetic field is fully dissipated out to such orbits (altitude of approximately 36,000 km [19,000 nm]). For polar missions, geomagnetic shielding is in effect for a portion of the orbit but absent for the remainder, the proportions depending on how the geomagnetic cutoff affects the specific altitude and inclination of the orbit.

Galactic cosmic rays (GCR, with HZEs comprising several percent) are also accessible to PEO and GEO missions for the same reason as with SCRs, i.e., the absence of geomagnetic shielding. The GCR flux is much lower than the intense SCR bursts but is approximately constant over time (aside from

variations with solar cycle). The magnitude of the GCR flux is known as a function of altitude and inclination (see Figure 5.7.2.1.2.2-3) so its effect on a particular mission can be predicted and designed for. The major uncertainty appears to be in the unique biological effects of HZE particles (see Paragraph 5.7.2.1.3.4) and what special design measures should be incorporated to protect against them.

PEO and GEO missions will also encounter trapped belt radiation. GEO orbits will involve only the energetic electrons of the outer belt and the bremsstrahlung they produce in shielding materials. For polar missions, depending on the altitude and inclination of the orbit, SAA protons and electrons of the inner belt will both contribute.

5.7.2.1.4.6 Radiation Monitoring

{A}

Because the various types of ionizing radiation have different biological effects and because radiation exposure rates will vary with location in the space module, a variety of radiation dosimetry systems will be required. Portable multisensor area monitors should be used to detect all of the expected types of radiation and to measure and record the radiation levels at various locations within the manned areas of the space module. Personnel monitoring dosimeters should be used to measure and record the radiation exposures of individual crewmembers. Other locations, such as where biological test subjects are maintained and where radioactive tracers are kept, should be monitored by the combined use of area monitors, personnel dosimeters, and other special equipment.

5.7.2.1.5 Low Earth Orbit Environment

{A}

Current missions are restricted to Low Earth Orbit (LEO). Figure 5.7.2.1.5-1 shows data taken during the high inclination STS-28 flight and illustrates the contributions of the three natural sources of radiation for a particular mission. The GCR component varies cyclically with ground track. Maximums in GCR dose rates occur at the extreme northern or southern portion of the orbital track. Minimums correspond to transits of the geomagnetic equator, where the space module experiences the maximum geomagnetic protection from GCR. At periodic intervals large spikes in the exposure rates are encountered which correspond to passages through the SAA. The largest spikes are passages through the regions of peak SAA intensity; smaller peaks represent passage through the fringes of the SAA. A unique feature of this data is the effects of a solar particle event (SPE) measured in LEO. Peaks in the dose rate attributed to the SPE occur at the extreme northern or southern portions of the orbital track. Whereas the GCR and SAA components shown in the Figure are "typical" for high inclination flights at relatively low altitude, the effects of SPEs on dose rates will depend upon a variety of parameters. Actual environmental conditions will depend upon orbital inclination, altitude, solar cycle and geomagnetic conditions.

5.7.2.2 Ionizing Radiation Design Requirements

{A}

5.7.2.2.1 Ionizing Radiation Exposure Limits

{A}

Astronauts have been classified as radiation workers and therefore a program must exist to protect them from excessive radiation exposure. The Presidential Executive Order 12196 requires all federal agencies, including NASA, comply with Occupational Safety and Health Administration regulations related to ionizing radiation exposure. While NASA is required to follow OSHA regulations, no OSHA standards exist for spaceflight. Terrestrial radiation exposure guidelines provided in the Code of Federal Regulations (29 CFR 1910.96) are too restrictive for space activities and therefore have been judged to be inappropriate. NASA can establish supplementary standards for appropriate control of radiation for astronauts in accordance with 29 CFR 1960.18.

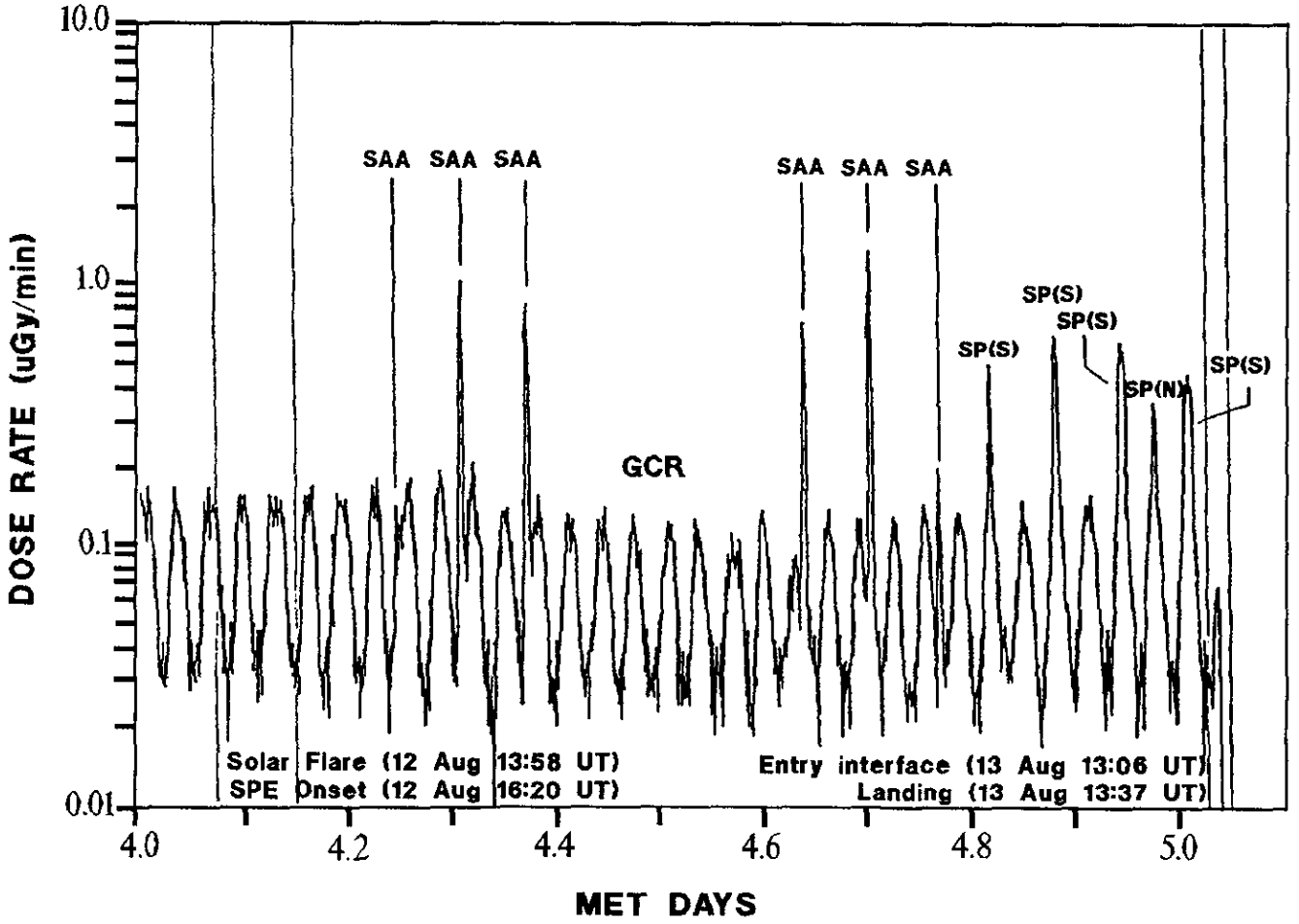

COMPONENT	MISSION DOSE CONTRIBUTIONS (uGy)
GCR: Galactic Cosmic Radiation	515
SAA: South Atlantic Anomaly	95
SP(S): Solar Protons, Southern Lat SP(N): Solar Protons, Northern Lat	16

MSIS515
Rev. B

Reference: 414

Figure 5.7.2.1.5-1 Measured Dose Rate Vs. Time For A High Inclination Shuttle Flight (STS-28) During A Solar Particle Event

The following NASA requirements serve as a basis for the implementation of the supplementary standard: (1) that its use applies to a limited population, (2) maintenance of detailed flight crew exposure records, (3) pre-flight hazard assessment/appraisal, (4) planned exposures be kept As Low As Reasonably Achievable (ALARA), (5) maintenance of operational procedures and flight rules to minimize the chance of excessive exposure and (6) man-made onboard radiation exposure complies with 29 CFR 1910.96 except where the NASA mission objectives cannot be accomplished otherwise.

NASA has adopted the recommendations that the National Council on Radiation Protection and Measurements (NCRP) presented in its Report 98, "Guidance on Radiation Received in Space Activities" (July, 1989) as the basis for the supplementary standard for spaceflight crew radiation exposures. The maximum exposure limits are presented in Figure 5.7.2.2.1-1. Whereas monthly and annual limits primarily exist to prevent the short term physiological effects of exposure, career limits exist to contain radiation risk within a 3% increased lifetime cancer mortality. The recommendations of the NCRP apply to activities in low Earth orbit, such as Space Station. For comparison, astronaut exposure limits are greater than those of terrestrial radiation workers, which are set to not exceed 5 rem per year.

5.7.2.2.2 Ionizing Radiation Protection Design Requirements

{A}

The following strategies shall be used to implement radiation protection features for crewmembers:

a. Radiation Protection - The design of habitable space vehicles shall include the necessary radiation protection features (shielding, radiation monitoring and dosimetry, etc.) for all expected missions to ensure that the crew dose rates are kept as low as reasonable achievable (ALARA levels) and that the maximum allowable dose limits are not exceeded.

b. Use of Onboard Mass - The design and layout of the space modules shall make optimal use of onboard mass as radiation shielding.

c. Radiation Contingency Plans - The habitable space module radiation environment enhancements (external/internal) will be confirmed and monitored by the space modules on-board radiation instrumentation. Flight Rules for enhanced radiation conditions, including adherence to crew radiation exposure limits, will be implemented to accomplish a timely and orderly hazard assessment and to determine the necessary actions(s) required to minimize exposure. Flight Rules action requirements, which range from "no action" to "crew de-orbit ASAP" are dependent on the exposure magnitude and rate, and projected end-of-mission enhancement accumulation.

d. Mission Radiation Control Program - A mission radiation control program shall be instituted to establish procedures and responsibilities consistent with the expected mission environment and duration of orbital stay in order to keep radiation exposures to crew at ALARA levels and within the established radiation exposure limits.

e. Onboard Radioactivity - The use of radioactive isotopes and radiation producing equipment onboard the habitable space modules will require adherence to standard groundbased radiation safety practices, including consideration of microgravity effects on those practices (cases review for exceptions determined by NASA objectives /policy).

f. Cumulative Crewmember Radiation Dose - The radiation dose equivalent accumulated by each space module crewmember shall be monitored throughout the active career of all crewmembers. Thus, career, as well as mission dose equivalent levels shall be kept ALARA, thereby ensuring that the maximum career dose equivalent imit shall not be exceeded.

IONIZING RADIATION EXPOSURE LIMITS[a]

Exposure interval	Depth (5 cm)	Eye (0.3 cm)	Skin (0.01 cm)
30 days	25 REM[b]	100 REM	150 REM
Annual	50 REM	200	300
Career	100 to 400[c]	400	600

CAREER EXPOSURE BY AGE AND SEX

Sex	Age			
	25	35	45	55
Male	150 REM	250 REM	325 REM	400 REM
Female	100	175	250	300

MSIS416 Rev. B

FOOTNOTES:

a These space flight crew ionizing radiation dose-equivalent limits, recommended to NASA by the National Council on Radiation Protection and Measurement, (Guidance on Radiation Received in Space Activities" - NCRP Report No. 98, July 31, 1989) have been legally adopted as the Agency's supplementary standard in accordance with 29 CFR 1960.18.

b This table is expressed in conventional units due to common usage by the discipline. The SI unit is Sievert (Sv), which is equivalent to 100 rem.

c The career depth dose-equivalent limit is based upon a maximum 3 percent lifetime excess risk of cancer mortality. The total dose-equivalent yielding this risk depends on sex and age at start of exposure. The career dose-equivalent limit is approximately equal to:

200 + 7.5 (age - 30) rem for males up to 400 rem maximum
200 + 7.5 (age - 38) rem for females up to 400 rem maximum

Reference: 206 Table 7-3
With Updates
419

Figure 5.7.2.2.1-1 Ionizing Radiation Exposure Limits for Spaceflight

5.7.2.2.3 Ionizing Radiation Monitoring and Dosimetry Design Requirements

{A}

The following design requirements shall be observed to limit the radiation dose that the crewmembers could acquire during a given mission on the space module.

a. Radiation Monitoring - The accumulated radiation dose within the occupied areas of the space modules shall be monitored and recorded for all mission. Radiation dose rates within the spacecraft shall also be monitored and recorded.

b. Crewmember Radiation Dose Monitoring - For each crewmember the radiation dose shall be measured, recorded, the effective dose equivalent calculated and stored as part of the crew's radiation exposure history.

c. Charged Particle Monitoring - Proton and other particle fluxes and their energy spectrum within the space module shall be monitored and recorded. Particle radiation characteristics such as particle direction and secondary particle flux, (i.e., neutrons) shall be monitored.

d. Location of Radiation Detectors - The location and characteristics of the onboard radiation detectors shall be consistent with the expected radiation environment.

e. Radiation Dose Management System - A radiation dose management system shall be provided for keeping track of crew cumulative radiation exposure records, scheduling and assigning crew activities and alerting personnel that are approaching their radiation dose limits.

f. Radiation Event Warning - A radiation detection system shall be provided which continuously monitors the interior radiation levels, records the accumulated dose, and can be read out on command from Mission Control and provides clear notification of radiation conditions within the space module .

5.7.2.2.4 Ionizing Radiation Personnel Protection Design Requirements

{A}

The following personnel protective equipment shall be provided, or be available, to assist and protect crewmembers during their mission:

a. EVA Radiation Protection - EVA shall not be scheduled during orbits passing through the South Atlantic Anomaly unless space suits and helmets incorporate radiation shielding.

b. Protective IVA Garments - Personal shielding devices, which are to be worn if and when the crew encounters high radiation conditions, are being considered for each crewmember.

c. Radioactive Contamination Control - Protective garments, equipment and procedures shall be established for dealing with possible radioactive contamination associated with any of the manmade radiation sources onboard.

5.7.3 Non-Ionizing Radiation

{A}

5.7.3.1 Non-Ionizing Radiation Design Considerations

{A}

5.7.3.1.1 Types of Non-Ionizing Radiation

{A}

Non-Ionizing Radiation (NIR) consists of the broad band of electromagnetic radiation having frequencies less than approximately 3E X 10^{15} Hz, i.e., from about 3 to 3 X $10E^{15}$ Hz, or, expressed differently, having wave lengths in the range 10 E^{8} to 10 E^{7}m (see Figure 5.7.3.1.1-1). In actuality, the dividing line between ionizing and non-ionizing radiation has been somewhat arbitrary, but the current definition sets electromagnetic radiation with energy of 12 ev (frequency of about $3E^{15}$ Hz) as the upper limit of non- ionizing radiation. (As seen in Figure 5.7.3.1.1-1, this means that

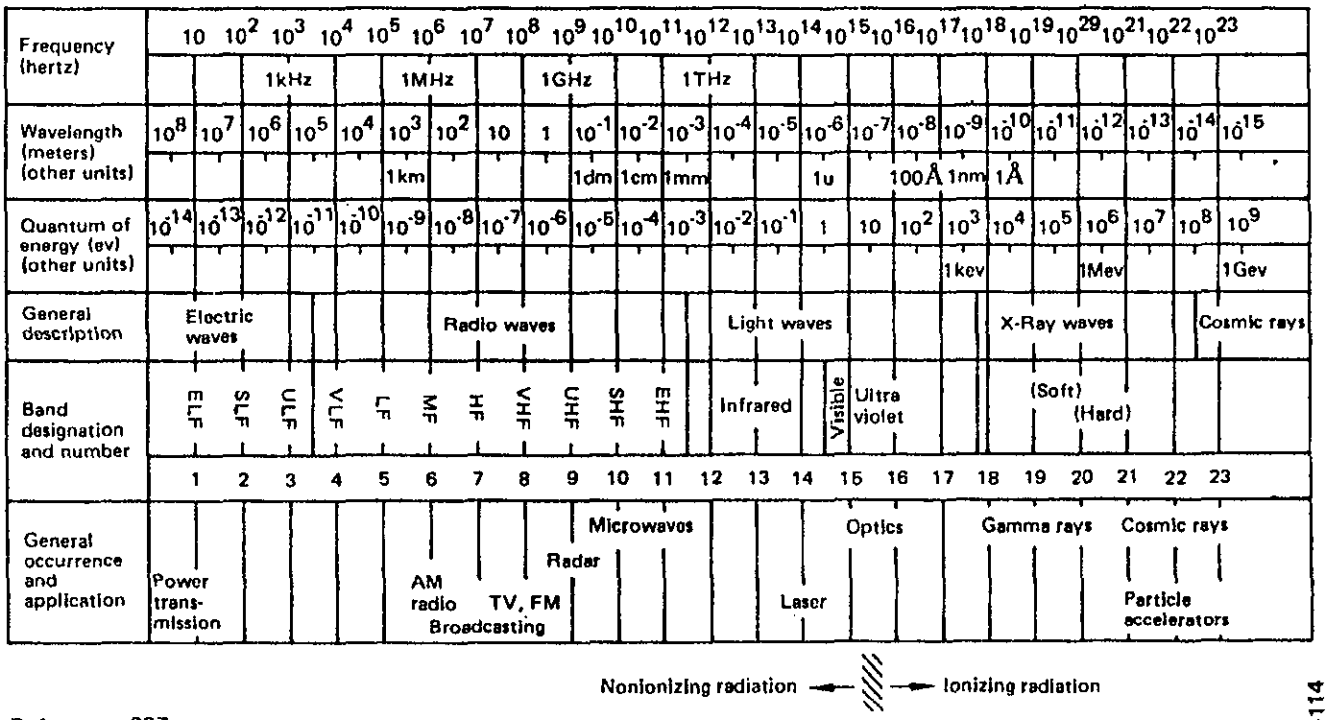

Reference: 297

Figure 5.7.3.1.1-1. The Electromagnetic Spectrum

the far end of the ultraviolet spectrum is to be classified as ionizing.)

While the precise identification of the transition point from non-ionizing to ionizing radiation is not crucial, it is clear that the main biological effect of non-ionizing radiation is the production of heat within tissue. However, for ultraviolet radiation (in addition to thermal reactions) other biological effects can occur as a result of chemical changes and electronic excitations, inducing effects such as skin erythema, eye inflammation (photokeratoconjunctivitis), and skin cancer. Similarly, visible radiation can also produce nonthermal transient effects to the eye (iritis, eye fatigue, etc.).

For purposes of health protection, electromagnetic NIR can be divided into a number of wavelength or frequency ranges:

a. Optical radiation, encompassing radiation with wavelengths over the range of $10E^{-7}$ to $10E^{-3}$ m. Optical radiation is further divided into three parts:

1. Ultraviolet radiation (UV), with wavelengths between 4 X $10E^{-7}$ to $10E^{-7}$ m (100 - 400 nm).

2. Visible radiation, with wavelengths between 4 X 10 E^{-7} to 7.6 X 10 E^{-7} m (400 - 760 nm).

3. Infrared radiation (IR), with wavelengths between 7.6 X 10 E^{-7} to 1 X 10 E^{-3} m (760 nm - 1 mm).c. Galactic Cosmic Radiation - Similar to the Radiofrequency radiation (RF), including microwaves (MW), having frequencies in the range of 300 to 3E11 Hz (300 Hz - 300 GHz) corresponding to wavelengths in the range of 1E3 km to 1 mm.

c. Extremely Low Frequency (ELF) fields with frequencies less than 300 Hz, in practice mainly power frequencies of 50 to 60 Hz.

This is not the only breakdown available and, in practice, various other classifications are used according to particular needs. In addition, NIR also includes pressure waves such as ultrasound and infrasound, which are on either side of the audible frequency range (20 Hz to 20 kHz), and electrostatic and magnetostatic fields.

The field of non-ionizing radiation has been marked by the use of different terminologies and protection concepts that vary significantly between the different types of radiation and their applications. The development of regulations and standards for NIR has been hampered by the lack of uniformity in terminology, quantities, units, etc. However, in terms of applicability to space modules, some parts of the NIR spectrum will pose particular problems requiring design considerations while other parts of the spectrum will not.

5.7.3.1.2 Sources of Non-Ionizing Radiation

{A}

Humans in space modules will be subject to non-ionizing radiation emitted from two different kinds of sources, those occurring naturally in space and those emanating from man- made equipment onboard the space module. The naturally occurring space radiation is comprised of electromagnetic radiation as well as charged particles. The electromagnetic component of space radiation may be categorized into four main sources:

a. Continuous Solar Emissions - The Sun emits a very broad spectrum of electromagnetic radiation. Of particular interest is the optical radiation band, which approximately resembles a blackbody spectrum based on a temperature of 5900 K (see Figure 5.7.3.1.2-1). This spectrum is peaked in the visible region (approximately 550 nm) and rapidly increases in intensity from the far UV (approximately 100 nm) to the visible (approximately 400 nm). The unique aspect of the UV environment in space compared to that on the Earth's surface is the lack of shielding against the solar irradiation provided by the Earth's ozone layer in the atmosphere.

Electromagnetic radiation in the radiofrequency range is also emitted but is of low intensity. Radioflux is typically measured and recorded on Earth at 2800 MHz.

b. Solar Flare Events - Electromagnetic radiation over the optical and radiofrequency wavelengths is emitted by the Sun during solar flares for short periods of time.

This electromagnetic radiation may even be emitted by small flares that do not produce solar cosmic rays (see Paragraph 5.7.2.1.2). The different radiofrequency waves are generated at different altitudes in the solar atmosphere (e.g., microwave bursts are produced in the lower part of the corona). These radiofrequency bursts are still not a problem in terms of direct biological effects on the crew. (Flux units are 10 E^{-22} W/m2 Hz, and a peak may produce up to 10 E^{5} flux units [10 E^{-9} W/m2] but may affect them indirectly by interfering with onboard electrical equipment communications, instrumentation, etc). For optical radiation, the increased intensity in the visible and UV range would be dealt with as an upper bound to the radiation from the continuous solar emissions.

e case of solar emissions, non-ionizing electromagnetic radiation produced by astronomical sources outside the solar system reach the Earth but are of such low intensity that they do not pose a problem in terms of their biological effects.

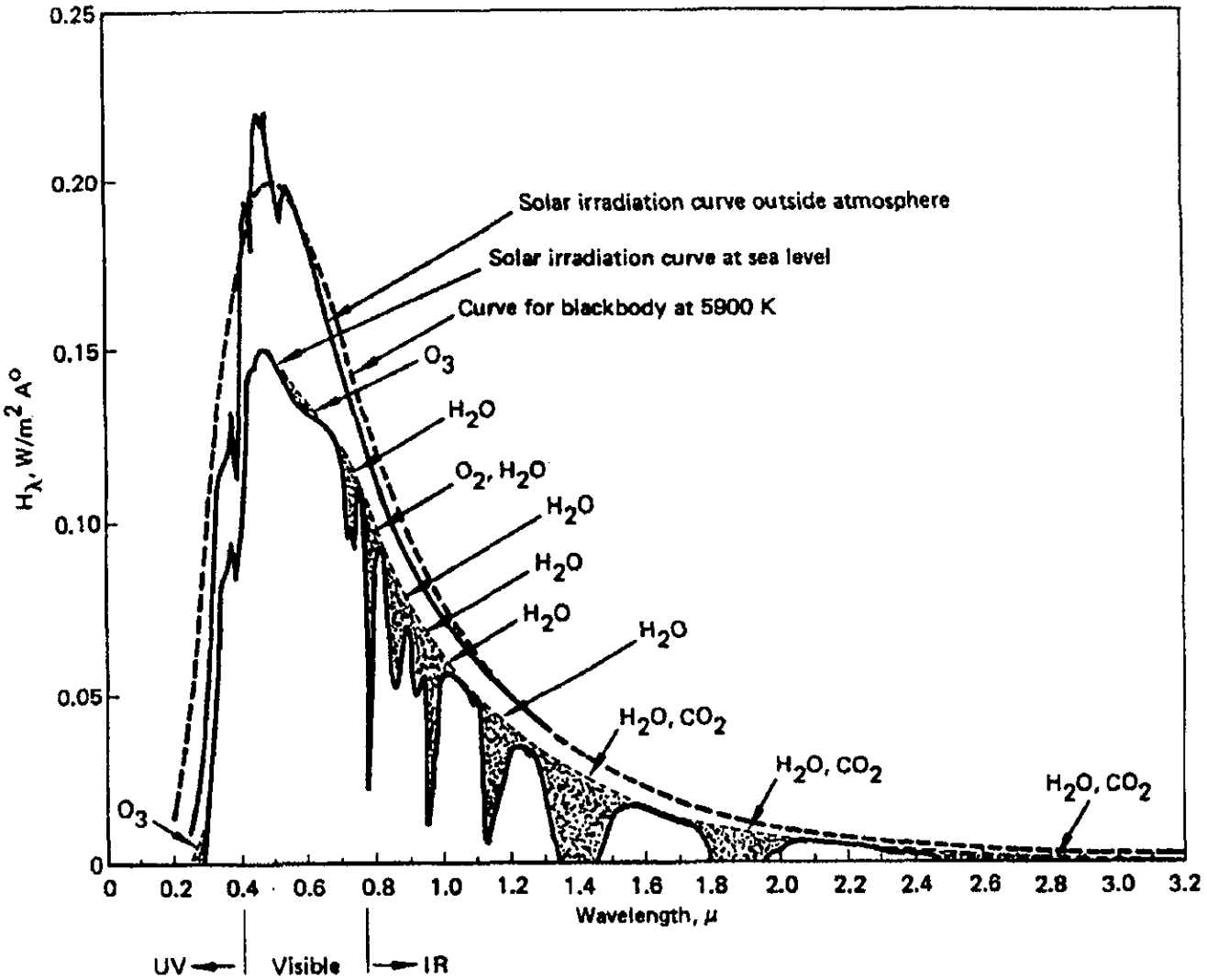

Reference: 289, Figure 37

MSIS-115

Figure 5.7.3.1.2-1. Spectral Distribution Curves Related to Solar Optical Radiation; Shaded Areas Indicate Absorption at Sea Level Due to the Atmospheric Constituents Shown

d. Sources of Magnetic Fields - The magnetic fields associated with various objects within the solar system vary over many orders of magnitude. At the center of sunspots, magnetic fields a thousand times that of Earth are to be found, although the magnetic field on the undisturbed surface of the Sun is 1% of that. The moon, stars, and Venus have magnetic fields between 1% and 10% of that of Earth, whereas Jupiter's magnetic field is 1000 times that of Earth.

e. Onboard Radiation Sources - Equipment-generated sources of non-ionizing radiation exist onboard the spacecraft in various forms and fall into the following general types.

1. Communication equipment (radar, radio, and microwave transmitters, receivers, antennas, and related equipment).

2. Lasers.

3. Lamps (UV, visible and IR).

4. Electronic equipment.

5. Welding equipment (when in use).

6. Electric power, power-conditioning and distribution equipment.

7. Miscellaneous.

5.7.3.1.3 Human Responses to Non-Ionizing Radiation

{A}

As indicated in Paragraph 5.7.3.1.1, for each main type of non-ionizing radiation, protection concepts have varied significantly. Thus, the human responses will be dealt with separately, first for radiofrequency radiation and then for optical radiation.

a. Radiofrequency Radiation - A large body of literature has been developed indicating the adverse biological effects of radiofrequency electromagnetic radiation on both humans and animals. A typical tabulation of some of these effects is shown in Figure 5.7.3.1.3-1.

For human exposure to electromagnetic energy at radiofrequencies from 300 kHz to 100 GHz, two standards groups have recently reviewed the literature on the biological effects of electromagnetic radiation and issued RF exposure limits.

The American National Standards Institute (ANSI) screened only those reports that produced positive findings, were reproducible, and supplied adequate dosimetric information. Behavior in experimental animals was found to be the most sensitive indicator of an adverse health effect (e.g., convulsions, work stoppage, etc.). Based on the review, ANSI concluded that acute (less than 1 hour) exposure to electromagnetic radiation deposited in the whole body at an average specific absorption rate (SAR) of less than 4 W/kg (0.1 BTU/lb-min) does not produce an adverse health effect in animals. However, because prolonged exposure (days and weeks) may cause damage, a safety factor of 10 was introduced reducing the permissible SAR to 0.4 W/kg (0.01 BTU/lb-min). Based on SAR, ANSI developed radiofrequency protection guides (RFPG) in terms of mean squared electric (E2) and magnetic (H2) field strengths and the equivalent plane wave power densities which should not be exceeded. The American Conference of Governmental Industrial Hygienists ACGIH) has adopted the ANSI limits as their threshold limit values (TLVs).

The International Non-Ionizing Radiation Committee (INIRC) of the International Radiation Protection Association (IRPA) reviewed the body of information on the biological effects of electromagnetic radiation more recently than ANSI. They used the same basic limit of the SAR, 0.4 W/kg (0.01 BTU/lb-

Response	Human response and description
Perception of heat	13 to 59 mW/cm^2 for 4 sec at 3000 and 10,000 MHz (observations in humans).
Pain threshold	1800 mW/cm^2 for 60 sec at 3000 MHz (observations in humans).
Cataracts	Lens clouding when temperature of lens increases by 4°K (4°C). Accumulation of subclinical damage at low power densities for short durations may yield cataracts. Evidence still equivocal.
Reproductive detriment	
Testes	Intrascrotal temperatures rise of > 1°K (> 1°C) by rf radiation or any other means reduces viable sperm count; this effect is usually reversible. Exposure to 2880 MHz at 5 mW/cm^2 for an indefinite period is the "threshold" for evidence of testicular damage in the most sensitive dog out of 35 dogs tested. Exposure to 3000 MHz at 8 mW/cm^2 did not effect mating of mice or rats.
Ovaries	No evidence that exposure to 10 mW/cm^2 or even somewhat greater interfere with reproduction in female mice.
Visceral effects	
Gastric ulcers	> 100 mW/cm^2 for ≥ 10 min.
Delay of gastric secretion and emptying	0.05 to 1 mW/cm^2 for 30 min. Reversible
Hematopoietic effects — Leukocytosis, lymphocytopenia, eosinopenia, red blood cell lifespan alteration, impaired bone marrow function, hemoglobin decreases, platelet decrease, reticulocytosis, etc.	Generally, long exposures to > 10 mW/cm^2 are required to yield an effect. Effects are generally reversible.
Cardiovascular effects — Blood flow changes, blood pressure decrease, heart rate increase, etc.	Effects generally attributable to peripheral vasodilation and hemodilution in response to heat stress.
Central nervous system — Agitation, drowsiness, muscular weakness, electroencephalogram changes, avoidance behavior, altered conditioned response, decreased endurance, headache, etc.	Large number of studies; some with occupationally exposed humans; some conflicting results. Eastern Europeans claim effects < 10 mW/cm^2; investigators in Western countries have not always observed these effects even at higher exposure levels. This is the area of greatest controversy.

Reference: 289, Table 44

MSIS-116

Figure 5.7.3.1.3-1. Some Biological Responses to Radiofrequency Radiation

min) for frequencies of 10 MHz and greater to obtain derived limits. Their derived occupational exposure limits were based on an SAR of 0.4 W/kg (0.01 BTU/lb-min) averaged over the whole body for six minutes or an SAR of 4 W/kg (0.1 BTU/lb-min) averaged over 1 gm (.04 oz) of tissue for six minutes.

A limited and generalized tabulation of the effects of RF radiation on humans is presented in Figure 5.7.3.1.3-2, which is based on the IRPA guidelines.

b. Optical Radiation (Lasers) - The biological effects induced by optical radiation are essentially the same for coherent sources (lasers) and incoherent sources for any given wavelength, exposure area, and duration. However, there is a necessity to treat lasers as a special case because very few conventional optical sources can approach the radiant intensities and irradiances achieved by lasers. Furthermore, because much of the early data on biological effects were developed using conventional optical sources, with emission of radiation over a broad band of wavelengths, these data are not directly applicable to the highly monochromatic emissions of lasers. The degree of uncertainty in relating biological thresholds derived from broadband and monochromatic sources has frequently led to the use of safety factors in the exposure limits (EL) for lasers, particularly in the case of UV lasers.

The eye and skin are critical organs for laser radiation exposure. The type of effect, injury thresholds, and damage mechanisms vary significantly with wavelength. In addition, the consequences of overexposure of the eye are generally more serious than that of the skin. Consequently, safety standards have emphasized protection of the eye. The main adverse human responses are Erythema (skin reddening), Photokeratitis (inflammation of the cornea), conjunctivitis, and retinal damage (see Figure 5.7.3.1.3-3).

(Refer to Reference 303 for detailed discussions of the specific biological damage mechanisms due to laser exposure.)

Exposure limits have been set by various standards organizations for the control of coherent optical radiation from lasers. Although these ELs have been developed for terrestrial applications, limits very similar to these would be expected to be set for the protection of astronauts in space.

The ELs for lasers are more complex than those for incoherent optical radiation because a number of different parameters have to be specified.

(A summary of these ELs is given in Paragraph 5.7.3.2.1. For additional details, References 303 or 305 should be consulted.)

Regarding laser safety for the eye, it is important to distinguish between a "point source" and an "extended source". Although exact geometrical definitions are not possible, ELs for "extended sources" apply to sources that subtend a visual angle greater than a limiting angle termed "alpha minimum". "Alpha minimum" is the minimum viewing angle measured at the eye that is subtended by an extended source and is defined in terms of the range (laser to target), laser beam diameter at range, and the viewing angle (between range and viewing range (eye to target). Values of "alpha minimum" vary with exposure duration and wavelength and are given (in milliradians) for two spectral bands in Figure 5.7.3.2.1-3. The ELs for "extended sources" are given in units of radiance (W/m^2sr) and integrated radiance (J/m^2sr). For point sources the units are different, namely irradiance (W/m^2) and radiant exposure (J/m^2).

c. Optical Radiation - Incoherent Ultraviolet Light - Life has evolved under the daily exposure to solar radiation. Although UVR is only about 5% of the sunlight that reaches the Earth's surface, it has sufficient energy to initiate biological ef-

RF frequency	Human effect
< 30 MHz	Subresonance range. Surface absorption dominates for the trunk, but not for the neck and legs, and the energy absorption decreases rapidly with frequency.
30 MHz - 400 MHz	Resonance range for the whole body (up to 300 MHz) and, when considering resonances in the head, up to 400 MHz. High absorption cross sections are possible due to the resonance.
400 MHz - 3000 MHz	"Hot spot" frequency range over which significantly localized energy absorption can be expected at incident power densities of about 100 W/m^2 (10 mW/cm^2). The size of the hot spots range from several centimteters at 915 MHz to 1-2 centimeters at 3000 MHz. Hot spots are caused by resonances at the lower frequencies and by quasiopitcal focusing of the incident fields at the higher frequencies. For the human head the hot spot range extends from 300-2000 MHz.
> 3000 MHz	Surface absorption range

Reference: 302, Appendix 1

MSIS-117

Figure 5.7.3.1.3-2. Absorption Characteristics of Radiofrequency Radiation in the Human Body

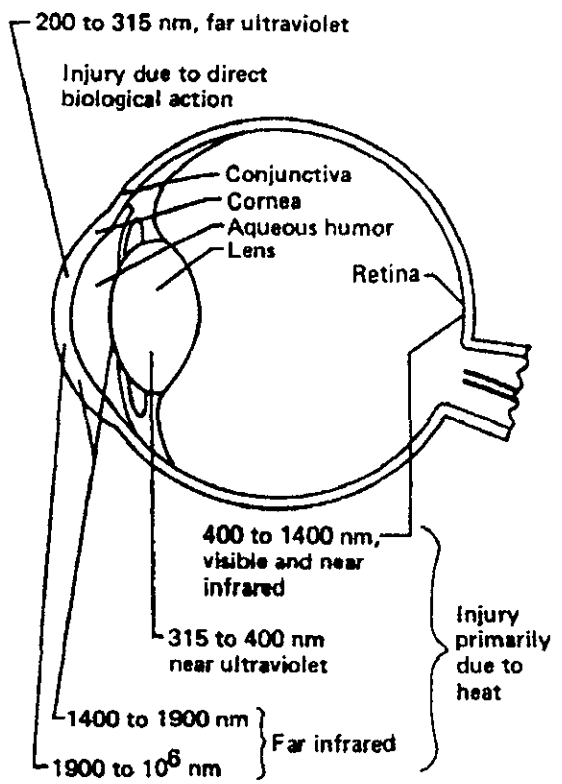

Reference: 4, Figure 6.8-1

MSIS-118

Figure 5.7.3.1.3-3. Impact of Optical Radiation on the Eye

fects that may be injurious. The critical organs for UVR exposure are the eye and skin because they may be readily exposed. The main adverse human responses are erythema, skin cancer, photokeratoconjunctivitis, cataracts, and retinal damage.

(Refer to Reference 304 for detailed discussion of the biological damage mechanisms from UV light.)

Exposure limits have been established by various standards organizations for the control of ultraviolet radiation from all incoherent sources: solar radiation (the main one in spacecraft), fluorescent lamps, welding and other arcs, gas discharges, etc. The most restrictive limits are for exposure to radiation having wavelengths less than 315 nm. Although these ELs have been developed for terrestrial applications, limits very similar to those would be expected to be set for the protection of astronauts in space.

To determine the effective irradiance of a broadband source weighted against the peak spectral effectiveness curve (at 270 nm), the following weighting formula should be used: where:

Eeff = effective irradiance in W/m^2 ($J/s/m^2$) normalized to a monochromatic source at 270 nm

E = spectral irradiance from measurements in $W/nm/m^2$

S = relative spectral effectiveness (unitless)

= bandwidth in nanometers of the calculation or measurement intervals.

Permissible exposure time in seconds for exposure to actinic UVR incident upon the unprotected skin or eye may be computed by dividing 30 J/m^2 by the value of Eeff in W/m^2. The maximal exposure duration may also be determined using Figure 5.7.3.2.1-9, which provides representative exposure durations corresponding to effective irradiances in W/m^2 or W/cm^2.

d. Optical Radiation - Infrared - Most biological tissue is considered opaque to the longer wavelength IR radiation (wavelength greater than 1500 nm) because of the essentially complete absorption of the radiation by the water within the tissue. The primary biological response to this longer wavelength IR is, therefore, thermal. Short wavelength IR, with wavelengths between 760-1500 nm, can produce adverse biological effects such as acute erythema, increased vasodilation of the capillaries and increased pigmentation that can be permanent. The interior parts of the eye (iris, lens and retina) will also be affected by this shorter wavelength IR, whereas the longer wavelength IR will have a thermal effect on the cornea. The close association between sensation of pain and the absorption of IR radiation usually precludes severe acute effects other than those discussed here.

5.7.3.1.4 Non-Ionizing Radiation Protection Design Considerations

{A}

The following design considerations should be accounted for in order to protect crewmembers against non-ionizing radiation.

a. Radiofrequency Radiation Source Identification - All the radiofrequency systems (radar, microwave, radio, etc.) onboard the spacecraft should be identified, described, and classified. This should include all equipment used to transmit and receive signals to and from the spacecraft as well as internal radiofrequency, and electrostatic and magnetostatic sources.

b. Electromagnetic Leakage - For each of the RF, electrostatic and magnetostatic sources, the electromagnetic leakage level (field strength, power density) at the exterior of the source should be measured to ensure that it is well within the exposure

limit.

c. Optical Radiation Source Identification - All the optical radiation sources (lasers, UV, visible, and IR lamps, welding equipment, etc.) onboard the space module should be identified, described, and classified.

d. Electromagnetic Hazards Analysis - For all of the RF and optical radiation sources identified, a systematic failure modes and effects analysis (FMEA) may be performed to ensure that all resulting hazards can be safely handled by the crew.

e. Window Locations - In the design and location of spacecraft windows (see Paragraph 11.11, Windows) consideration should be given to the protection of crewmembers against both direct and reflected (off large solid angle surfaces with high reflectivity in the UV range) UV radiation.

f. RF Aperture Locations - In the design and location of electromagnetic apertures throughout the spacecraft, consideration should be given to the protection of the crew against both direct, reflected, and scattered electromagnetic radiation.

g. Use of Lasers - In using lasers, the most effective means of hazard control is total enclosure of the laser and all beam paths. For conditions where such total containment is not possible, one or more of the following measures should be used: partial beam enclosure, laser eye protectors, administrative controls, and restricted access to beam paths.

5.7.3.2 Non-Ionizing Radiation Design Requirements

{A}

5.7.3.2.1 Non-Ionizing Radiation Exposure Limits

{A}

The following non-ionizing radiation exposure limits shall apply:

a. Radiofrequency Electromagnetic Fields Exposure Limits - The American National Standards Institute (ANSI) Radio Frequency Protection Guides (RFPG) for occupational exposure are shown in Figure 5.7.3.2.1-1 and illustrated in Figure 5.7.3.2.1-2.

b. Optical Laser Radiation Exposure Limits - The following laser exposure limits [contained in both the ANSI and American Conference of Governmental Industrial hygienists (ACGIH) standards] apply to continuous lasers [for repetitively pulsed lasers, the additional stipulations given the ANSI and ACGIH standards shall apply (Z136.1-1986, ANSI Standard for the Safe Use of Lasers, May 23, 1986; and ACGIH Threshold Limit Values and Biological Exposure Indices for 1987-1988; respectively.)].

1. Determination of "Point Source" or "Extended "Source" Laser Exposure Criteria Applicability - Exposure limits for "Extended Sources" shall apply to sources that subtend a visual angle measured at the eye greater than the alpha-minimums given in Figure 5.7.3.2.1-3. "Point Source" exposure limits shall apply to sources with alpha-minimums less than those shown.

2. Point Source Laser Eye Exposure Limits - The eye exposure limits given in Figure 5.7.3.2.1-4 shall apply to all point source lasers.

Electromagnetic Fields *

1 Frequency Range (MHz)	2 Electric field Strength (E) (V/m)	3 Magnetic Field Strength (H) (A/m)	4 Power Density (S) E-Field, H-Field (mW/cm^2)	5 Averaging Time $\|E\|^2$, S or $\|H\|^2$ (minutes)	
0.003 - 0.1	614	163	(100, 1 000 000)†	6	6
0.1 - 1.34	614	16.3/f	(100, 10 000/f^2)†	6	6
1.34 - 3.0	823.8/f	16.3/f	(180/f^2, 10 000/f^2)†	f^2/0.3	6
3.0 - 30	823.8/f	16.3/f	(180/f^2, 10 000/f^2)†	30	6
30 - 100	27.5	158.3/$f^{1.668}$	(0.2, 940 000/$f^{3.336}$)†	30	0.0636 $f^{1.337}$
100 - 300	27.5	0.0729	0.2	30	30
300 - 3 000			f/1 500	30	
3 000 - 15 000			f/1 500	90 000/f	
15 000 - 300 000			10	616 000/$f^{1.2}$	

* The exposure values in terms of electric and magnetic field strengths are th values obtained by spatially averaging values over an area equivalent to the vertical cross-section of the human body (projected area).

† These plane-wave equivalent power density values, although not appropriate for near-field conditions, are commonly used as a convenient comparison with MPEs at higher frequency and are displayed on some instruments in use.

Reference: 410

Figure 5.7.3.2.1-1 Occupational Exposure Limits for Radiofrequency Electromagnetic Fields

MSISS14 Rev. B

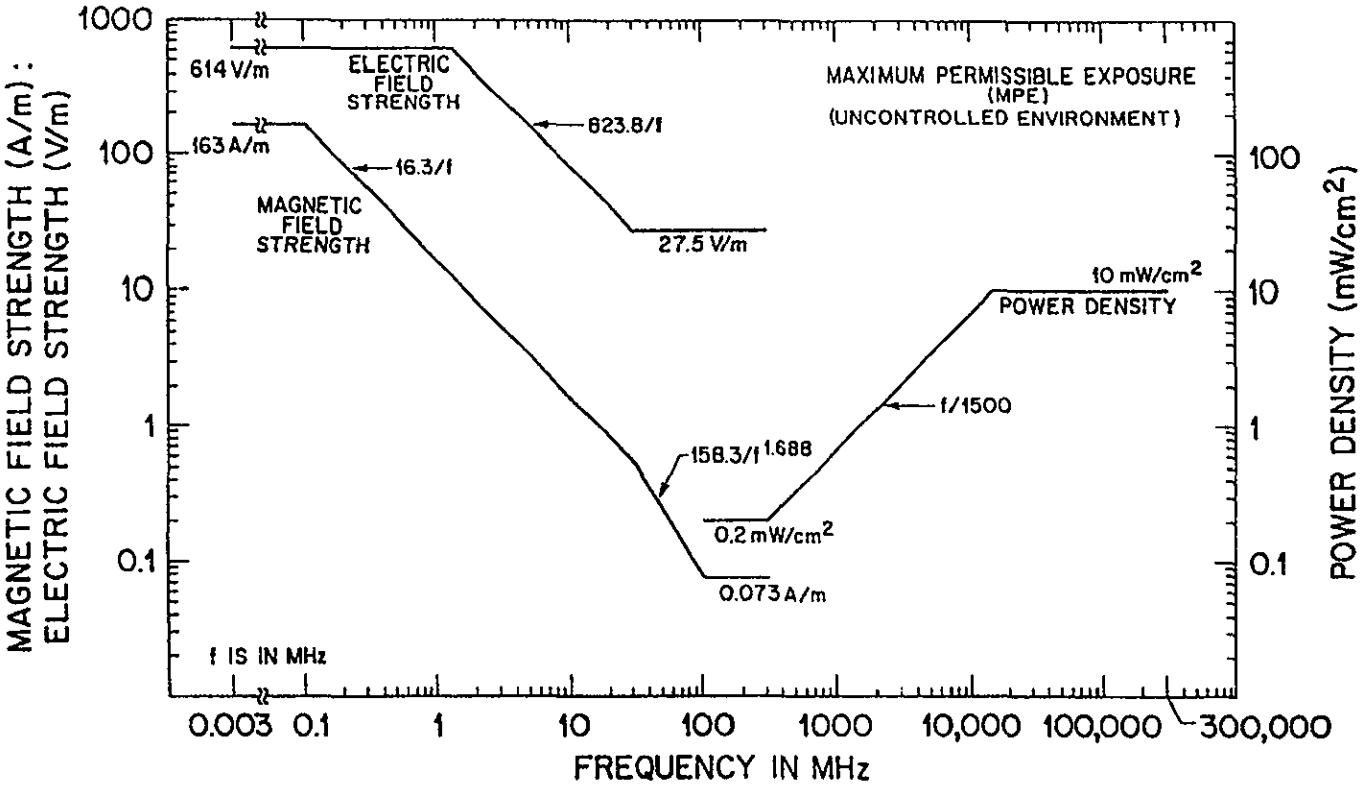

Reference: 410

MSIS513
Rev. B

Figure 5.7.3.2.1-2 Occupational Exposure Limits for Radiofrequency Electromagnetic Fields

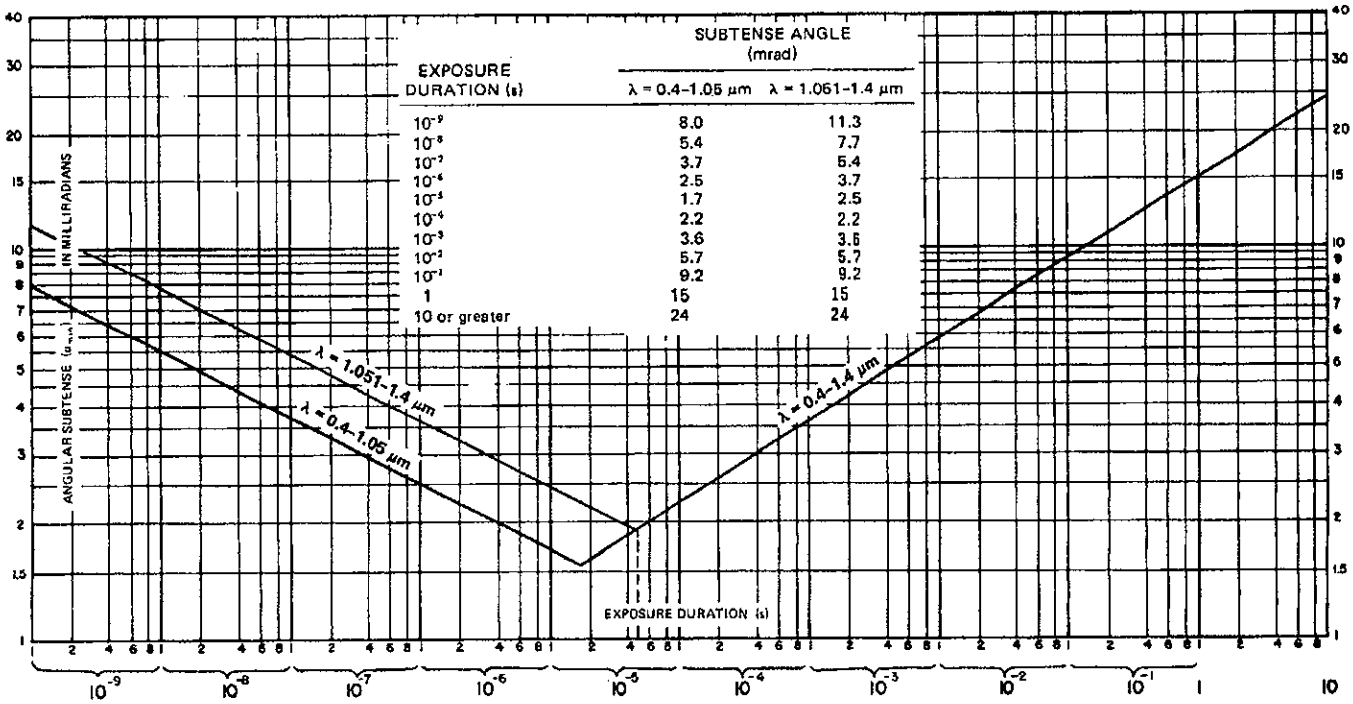

EXPOSURE DURATION (s)	SUBTENSE ANGLE (mrad) λ = 0.4-1.05 μm	λ = 1.051-1.4 μm
10^{-9}	8.0	11.3
10^{-8}	5.4	7.7
10^{-7}	3.7	5.4
10^{-6}	2.5	3.7
10^{-5}	1.7	2.5
10^{-4}	2.2	2.2
10^{-3}	3.6	3.6
10^{-2}	5.7	5.7
10^{-1}	9.2	9.2
1	15	15
10 or greater	24	24

Note: Extended sources have an angular subtense or apparent visual angle $\geq \alpha_{min.}$ Angular subtenses (apparent visual angles) $< \alpha_{min}$ are considered intrabeam viewing.

MSIS 429 Rev. A

Reference: 383, Figure 3

Figure 5.7.3.2.1-3 Alpha-minimums used to determine "Point Source" or "Extended Source" Laser Exposures

Wavelength, λ (μm)	Exposure Duration, t (s)	Maximum Permissible Exposure (MPE)	Notes for Calculation and Measurement
Ultraviolet			
0.200–0.302	$10^{-9}-3\times10^{4}$	3×10^{-3} J · cm^{-2}	or $0.56t^{1/4}$ J · cm^{-2}, whichever is lower
0.303	$10^{-9}-3\times10^{4}$	4×10^{-3} J · cm^{-2}	
0.304	$10^{-9}-3\times10^{4}$	6×10^{-3} J · cm^{-2}	
0.305	$10^{-9}-3\times10^{4}$	1.0×10^{-2} J · cm^{-2}	
0.306	$10^{-9}-3\times10^{4}$	1.6×10^{-2} J · cm^{-2}	
0.307	$10^{-9}-3\times10^{4}$	2.5×10^{-2} J · cm^{-2}	
0.308	$10^{-9}-3\times10^{4}$	4.0×10^{-2} J · cm^{-2}	
0.309	$10^{-9}-3\times10^{4}$	6.3×10^{-2} J · cm^{-2}	1-mm limiting aperture
0.310	$10^{-9}-3\times10^{4}$	1.0×10^{-1} J · cm^{-2}	
0.311	$10^{-9}-3\times10^{4}$	1.6×10^{-1} J · cm^{-2}	
0.312	$10^{-9}-3\times10^{4}$	2.5×10^{-1} J · cm^{-2}	
0.313	$10^{-9}-3\times10^{4}$	4.0×10^{-1} J · cm^{-2}	
0.314	$10^{-9}-3\times10^{4}$	6.3×10^{-1} J · cm^{-2}	
0.315–0.400	$10^{-9}-10$	$0.56\,t^{1/4}$ J · cm^{-2}	
0.315–0.400	$10-3\times10^{4}$	1 J · cm^{-2}	
Visible and Near Infrared*			
0.400–0.700	$10^{-9}-1.8\times10^{-5}$	5×10^{-7} J · cm^{-2}	
0.400–0.700	$1.8\times10^{-5}-10$	$1.8\,t^{3/4}\times10^{-3}$ J · cm^{-2}	
0.400–0.550	$10-10^{4}$	10×10^{-3} J · cm^{-2}	
0.550–0.700	$10-T_1$	$1.8\,t^{3/4}\times10^{-3}$ J · cm^{-2}	
0.550–0.700	T_1-10^{4}	$10\,C_B\times10^{-3}$ J · cm^{-2}	7-mm limiting aperture
0.400–0.700	$10^{4}-3\times10^{4}$	$C_B\times10^{-6}$ W · cm^{-2}	
0.700–1.050	$10^{-9}-1.8\times10^{-5}$	$5\,C_A\times10^{-7}$ J · cm^{-2}	
0.700–1.050	$1.8\times10^{-5}-10^{3}$	$1.8\,C_A\,t^{3/4}\times10^{-3}$ J · cm^{-2}	
1.051–1.400	$10^{-9}-5\times10^{-5}$	5×10^{-6} J · cm^{-2}	
1.051–1.400	$5\times10^{-5}-10^{3}$	$9\,t^{3/4}\times10^{-3}$ J · cm^{-2}	
0.700–1.400	$10^{3}-3\times10^{4}$	$320\,C_A\times10^{-6}$ W · cm^{-2}	
Far Infrared			
$1.4-10^{3}$	$10^{-9}-10^{7}$	10^{-2} · cm^{-2}	
	$10^{7}-10$	$0.56\,t^{1/4}$ J · cm^{-2}	
	>10	0.1 W · cm^{-2}	
1.54 only	$10^{-9}-10^{-6}$	1.0 J · cm^{-2}	

NOTES: $C_A = 1$ for $\lambda = 0.400$–$0.700\ \mu$m,
$C_A = 10^{2.0(\lambda - 0.700)}$ for $\lambda = 0.700$–$1.050\ \mu$m
$C_A = 5$ for $\lambda = 1.050$–$1.400\ \mu$m,
$C_B = 1$ for $\lambda = 0.400$–$0.550\ \mu$m,
$C_B = 10^{15(\lambda - 0.550)}$ for $\lambda = 0.550$–$0.700\ \mu$m
$T_1 = 10\times10^{20(\lambda - 0.550)}$ for $\lambda = 0.550$–$0.700\ \mu$m

MSIS424 Rev. B

Reference: 383, Table 5 With Updates

Figure 5.7.3.2.1-4 "Point Source" Laser Eye Exposure Limits

3. Extended Source Laser Eye Exposure Limits - The eye exposure limits given in Figure 5.7.3.2.1-5 apply to all extended source lasers.

4. Extended Source Laser Skin Exposure Limits - The skin exposure limits shown in Figure 5.7.3.2.1-6 shall apply to all extended source lasers.

5. Exposure Limits for Commonly Available Types of Lasers - The eye and skin laser exposure limits for specific types of lasers shown in Figure 5.7.3.2.1-7 shall apply (these limits are derived from the limits given in the above figures).

c. Incoherent Ultraviolet Optical Radiation Exposure Limits

1. Determination of Combined Continuous and Pulsed UV Exposure Average - The irradiance from continuous exposure and radiant exposure for time-limited or pulsed exposures to the eye or skin shall be averaged over the area of a circular measurement aperture of less than 1 mm (0.03937 in.) diameter.

2. UV-A Spectrum (315-400 nm) Radiation Exposure Limits - The total irradiance incident upon unprotected skin shall be less than 10 W/m^2 (0.053 BTU/ft^2-min.) for periods of exposure longer than 1000 seconds. For exposure times less than 1000 seconds, radiant exposure shall be less than 1 J/cm^2 (0.006 BTU/in^2).

3. Actinic UV Spectrum (180-315 nm) Radiation Exposure Limits - (The following UV exposure limits are contained in both ACGIH and IRPA standards). The limits for radiant exposure incident upon the unprotected skin or eye within the 8-hour period are given in Figure 5.7.3.2.1-8.

The maximum exposure durations to broadband actinic UV sources are given in Figure 5.7.3.2.1-9 (see Paragraph 5.7.3.1.3.c for the formula to be used to derive the effective irradiance).

4. Broad-Band Optical Sources - The spectral weighting functions listed in Figure 5.7.3.2.1-10 shall apply in determining broad-band optical exposure limits. (See ACGIH for formulae needed to calculate exposure times).

5.7.3.2.2 Non-Ionizing Radiation Protection Design Requirements

{A}

The following design requirements shall be implemented to protect crewmembers against non-ionizing radiation:

a. Safety Guidelines - Systems employing lasers will be designed and operated in accordance with the ANSI Standard Z136.1 - 1986 except where the unique environment or mission requirements clearly makes it unreasonable to do so. The hazard analysis for a system will specifically address any instance where it does not meet the standard.

b. RF and Optical Radiation Monitoring - Based on the identified sources of RF and optical radiation, monitoring and warning systems shall be provided consistent with the potential hazard from each source.

c. Procedures for RF and Optical Sources - Procedures for the safe operation of RF and optical radiation sources shall be provided. Based on the mission plans, the possibility of providing automatic power shutoff for the hazardous RF and optical radiation equipment shall be considered.

d. Protective Measures - Procedures and equipment shall be provided to enable positive protective measures to be taken to prevent accidental exposures from RF and optical radiation.

Wavelength, λ (μm)	Exposure Duration, t (s)	Maximum Permissible Exposure (MPE)	Notes for Calculation and Measurement
Ultraviolet			
0.200–0.302	10^{-9}–3×10^4	3×10^{-3} J · cm^{-2}	or $0.56 t^{1/4}$ J · cm^{-2}, whichever is lower
0.303	10^{-9}–3×10^4	4×10^{-3} J · cm^{-2}	
0.304	10^{-9}–3×10^4	6×10^{-3} J · cm^{-2}	
0.305	10^{-9}–3×10^4	1.0×10^{-2} J · cm^{-2}	
0.306	10^{-9}–3×10^4	1.6×10^{-2} J · cm^{-2}	
0.307	10^{-9}–3×10^4	2.5×10^{-2} J · cm^{-2}	
0.308	10^{-9}–3×10^4	4.0×10^{-2} J · cm^{-2}	
0.309	10^{-9}–3×10^4	6.3×10^{-2} J · cm^{-2}	1-mm limiting aperture
0.310	10^{-9}–3×10^4	1.0×10^{-1} J · cm^{-2}	
0.311	10^{-9}–3×10^4	1.6×10^{-1} J · cm^{-2}	
0.312	10^{-9}–3×10^4	2.5×10^{-1} J · cm^{-2}	
0.313	10^{-9}–3×10^4	4.0×10^{-1} J · cm^{-2}	
0.314	10^{-9}–3×10^4	6.3×10^{-1} J · cm^{-2}	
0.315–0.400	10^{-9}–10	$0.56\, t^{1/4}$ J · cm^{-2}	
0.315–0.400	10 –3×10^4	1 J · cm^{-2}	
Visible*			
0.400–0.700	10^{-9}–10	$10\, t^{1/3}$ J · cm^{-2} · sr^{-1}	1-mm limiting aperture or α_{min}, whichever is greater
0.400–0.550	10–10^4	21 J · cm^{-2} · sr^{-1}	
0.550–0.700	10–T_1	$3.83\, t^{3/4}$ J · cm^{-2} · sr^{-1}	
0.550–0.700	T_1–10^4	$21\, C_B$ J · cm^{-2} · sr^{-1}	
0.400–0.700	10^4–3×10^4	$2.1\, C_B\, 10^{-3}$ W · cm^{-2} · sr^{-1}	
Near Infrared*			
0.700–1.400	10^{-9}–10	$10\, C_A\, t^{1/3}$ J · cm^{-2} · sr^{-1}	
0.700–1.400	10–10^3	$3.83\, C_A\, t^{3/4}$ J · cm^{-2} · sr^{-1}	
0.700–1.400	10^3–3×10^4	$0.64\, C_A$ W · cm^{-2} · sr^{-1}	
Far Infrared			
1.4–10^3	10^{-9}–10^{-7}	10^{-2} J · cm^{-2}	
	10^{-7}–10	$0.56\, t^{1/4}$ J · cm^{-2}	
	>10	0.1 W · cm^{-2}	
1.54 only	10^{-9}–10^{-6}	1.0 J · cm^{-2}	

NOTES: $C_A = 1$ for $\lambda = 0.400$–0.700 μm,
$C_A = 10^{2.0(\lambda - 0.700)}$ for $\lambda = 0.700$–1.050 μm
$C_A = 5$ for $\lambda = 1.051$–1.400 μm,
$C_B = 1$ for $\lambda = 0.400$–0.550 μm,
$C_B = 10^{15(\lambda - 0.550)}$ for $\lambda = 0.550$–0.700 μm
$T_1 = 10 \times 10^{20(\lambda - 0.550)}$ for $\lambda = 0.550$–0.700 μm

MSIS425 Rev. B

Reference: 383, Table 6

Figure 5.7.3.2.1-5 "Extended Source" Laser Eye Exposure Limits

Wavelength, (μm)	Exposure Duration, t (s)	Maximum Permissible Exposure (MPE)	Notes for Calculation and Measurement
Ultraviolet			
0.200–0.302	$10^{-9}-3\times10^{4}$	3×10^{-3} J · cm^{-2}	or $0.56t^{1/4}$ J · cm^{-2}, whichever is lower; 1-mm limiting aperture
0.303	$10^{-9}-3\times10^{4}$	4×10^{-3} J · cm^{-2}	
0.304	$10^{-9}-3\times10^{4}$	6×10^{-3} J · cm^{-2}	
0.305	$10^{-9}-3\times10^{4}$	1.0×10^{-2} J · cm^{-2}	
0.306	$10^{-9}-3\times10^{4}$	1.6×10^{-2} J · cm^{-2}	
0.307	$10^{-9}-3\times10^{4}$	2.5×10^{-2} J · cm^{-2}	
0.308	$10^{-9}-3\times10^{4}$	4.0×10^{-2} J · cm^{-2}	
0.309	$10^{-9}-3\times10^{4}$	6.3×10^{-2} J · cm^{-2}	
0.310	$10^{-9}-3\times10^{4}$	1.0×10^{-1} J · cm^{-2}	
0.311	$10^{-9}-3\times10^{4}$	1.6×10^{-1} J · cm^{-2}	
0.312	$10^{-9}-3\times10^{4}$	2.5×10^{-1} J · cm^{-2}	
0.313	$10^{-9}-3\times10^{4}$	4.0×10^{-1} J · cm^{-2}	
0.314	$10^{-9}-3\times10^{4}$	6.3×10^{-1} J · cm^{-2}	
0.315–0.400	$10^{-9}-10$	$0.56\,t^{1/4}$ J · cm^{-2}	
0.315–0.400	$10-10^{3}$	1 J · cm^{-2}	
0.315–0.400	$10^{3}-3\times10$	1×10^{-3} W · cm^{-2}	
Visible and Near Infrared			
0.400–1.400	$10^{-9}-10^{-7}$	$2\,C_A\times10^{-2}$ J · cm^{-2}	1-mm limiting aperture
	$10^{-7}-10$	$1.1\,C_A\,t^{1/4}$ J · cm^{-2}	
	$10-3\times10^{4}$	$0.2\,C_A$ W · cm^{-2}	
Far Infrared			
1.4–10^{3}	$10^{-9}-10^{-7}$	10^{-2} J · cm^{-2}	1-mm limiting aperture for 1.4 to 100 μm; 11-mm limiting aperture for 0.1 to 1 mm
	$10^{-7}-10$	$0.56\,t^{1/4}$ J cm^{-2}	
	>10	0.1 W · cm^{-2}	
1.54 only	10^{-9} to 10^{-6}	1.0 J cm^{-2}	

Reference: 383, Table 7
With Updates

MSIS426
Rev. B

Figure 5.7.3.2.1-6 Maximum Permissive Exposure (MPE) for Skin Exposure to a Laser Beam

Laser Type	Primary Wavelength (nm)	Exposure Limit	
		Eye	Skin
Helium-Cadmium Argon	441.6 488/514.5	a) 2.5 mW · cm^{-2} for 0.25 s b) 10 mJ · cm^{-2} for 10 to 10^4 s c) 1 μW · cm^{-} for t > 10^4 s	0.2 W · cm^{-2} for t > 10 s
Helium-Neon	632.8	a) 2.5 mW · cm^{-2} for 0.25 s b) 10 mJ · cm^{-2} for 10 s c) 170 mJ · cm^{-2} for t > 453 s d) 17 μW · cm^{-2} for t > 10^4 s	0.2 W · cm^{-2} for t > 10 s
Krypton	647	a) 2.5 mW · cm^{-2} for 0.25 s b) 10 mJ · cm^{-2} for 10 s c) 280 mJ · cm^{-2} for t > 871 s d) 28 μW · cm^{-2} for t > 10^4 s	0.2 W · cm^{-2} for t > 10 s
Neodymium: YAG Gallium-Arsenide at room temp	1,064 905	1.6 mW · cm^{-2} for t > 1000 s 0.8 mW · cm^{-2} for t > 1000 s	1.0 W · cm^{-2} 0.5 W · cm^{-2} for t > 10 s
Helium-Cadmium Nitrogen	325 337.1	1 J · cm^{-2} for 10 to 3 × 10^4 s	a) 1 J · cm^{-2} for 10 to 1000 s b) 1 mW · cm^{-2} for t > 1000 s
Carbon-dioxide (and other lasers 1.4 μm to 1000 μm)	10,600	0.1 W · cm^{-2} for t > 10 s	0.1 W · cm^{-2} for t > 10 s

Reference: 383, Table A3

Figure 5.7.3.2.1-7 Intrabeam MPE for the Eye and Skin for Selected CW Lasers

MSIS 427
Rev. A

Wavelength (nm)	TLV_2 (mJ/cm^2)	Relative Spectral Effectiveness S_λ
200	100	0.03
210	40	0.075
220	25	0.12
230	16	0.19
240	10	0.30
250	7.0	0.43
254	6.0	0.5
260	4.6	0.65
270	3.0	1.0
280	3.4	0.88
290	4.7	0.64
300	10	0.30
305	50	0.06
310	200	0.015
315	1000	0.003

* See Laser TLVs.

Reference: 385, page 106-107

MSIS 421z Rev. A

Figure 5.7.3.2.1-8 TLV's for Radiant Exposure of Actinic UV upon Unprotected Skin or Eye

See following page for applicable notes

Duration of Exposure Per Day	Effective Irradiance, E_{eff} ($\mu W/cm^2$)
8 hrs	0.1
4 hrs	0.2
2 hrs	0.4
1 hr	0.8
30 min	1.7
15 min	3.3
10 min	5
5 min	10
1 min	50
30 sec	100
10 sec	300
1 sec	3,000
0.5 sec	6,000
0.1 sec	30,000

Reference: 385, page 106-107

MSIS 422z REV. A

Figure 5.7.3.2.1-9 Permissible Ultraviolet Exposures

See following page for applicable notes

Notes for Figures 5.7.3.2.1-8 TLV's for Radiant Exposure of Actinic UV upon Unprotected Skin or Eye and
5.7.3.2.1-9 Permissable Ultraviolet Exposures

ULTRAVIOLET RADIATION

These Threshold Limit Values (TLVs) refer to ultraviolet radiation in the spectral region between 200 and 400 nm and represent conditions under which it is believed that nearly all workers may be repeatedly exposed without adverse effect. These values for exposure of the eye or the skin apply to ultraviolet radiation from arcs, gas and vapor discharges, fluorescent and incandescent sources, and solar radiation, but do not apply to ultraviolet lasers.* These values do not apply to ultraviolet radiation exposure of photosenitive individuals or of individuals concomitantly exposed to photosensitizing agents. These values should be used as guides in the control of exposure to continuous sources where the exposure duration shall not be less than 0.1 sec.

These values should be used as guides in the control of exposure to ultraviolet sources and should not be regarded as a fine line between safe and dangerous levels.

Recommended Values:

The threshold limit value for occupational exposure to ultraviolet radiation incident upon skin or eye where irradiance values are known and exposure time is controlled are as follows:

1. For the near ultraviolet spectral region (320 to 400 nm) total irradiance incident upon the unprotected skin or eye should not exceed 1 mW/cm2 for periods greater than 10^3 seconds (approximately 16 minutes) and for exposure times less than 10^3 seconds should not exceed one J/cm^2.

2. For the actinic ultraviolet spectral region (200-315 nm), radiant exposure incident upon the unprotected skin or eye should not exceed the values given in Figure 5.7.3.2.1-8 within an 8-hour period.

3. To determine the effective irradiance of a broadband source weighted against the peak of the spectral effectiveness curve (270 nm), the following weighting formula should be used:

$$E_{eff} = \Sigma E_\lambda S_\lambda \Delta\lambda$$

Where:

E_{eff} = effective irradiance relative to a monochromatic source at 270 nm in W/cm^2 (J/s/cm^2)

E_λ = spectral irradiance in W/cm^2/nm

S_λ = relative spectral effectiveness (unitless)

$\Delta\lambda$ = band width in nanometers

4. Permissible exposure time in seconds for exposure to actinic ultraviolet radiation incident upon the unprotected skin or eye may be computed by dividing 0.003 J/cm^2 by E_{eff} in W/cm^2.

*See Laser Exposure Limits
References 385

MSIS431
Rev. B

Wavelength (nm)	Blue-Light Hazard-Function B_λ	Burn Hazard Function R_λ
400	0.10	1.0
405	0.20	2.0
410	0.40	4.0
415	0.80	8.0
420	0.90	9.0
425	0.95	9.5
430	0.98	9.8
435	1.0	10.0
440	1.0	10.0
445	0.97	9.7
450	0.94	9.4
455	0.90	9.0
460	0.80	8.0
465	0.70	7.0
470	0.62	6.2
475	0.55	5.5
480	0.45	4.5
485	0.40	4.0
490	0.22	2.2
495	0.16	1.6
500-600	$10^{[(450-\lambda)/50]}$	1.0
600-700	0.001	1.0
700-1050	NA*	$10^{[(700-\lambda)/500]}$
1050-1400	NA	0.2

NA = Not applicable.

Reference: 385, page 111

MSIS423 Rev. B

Figure 5.7.3.2.1-10 Spectral Weighting Functions for Assessing Retinal Hazards from Broad-Band Optical Sources

e. Personnel Protection Devices - Based on the safety guidelines and the results of the electromagnetic hazards analysis (see Paragraph 5.7.3.1.4), personnel protective device requirements (eyewear, clothing) shall be established and the requisite personnel equipment shall be provided.

5.8 THERMAL ENVIRONMENT
{A}

5.8.1 Introduction
{A}

This section provides design considerations and requirements for temperature, humidity, and airflow conditions that influence crew comfort. This includes descriptions of ambient conditions, body temperature, self-regulation, heat stress, cold stress, and ventilation. Monitoring and control of the thermal environment are also included.

Refer to Paragraph 6.5, Touch Temperature, for surface temperature design considerations and requirements.)

5.8.2 Thermal Environment Design Considerations
{A}

The productivity of the crew of a space module is strongly influenced by their comfort and health. The thermal environment is one of the most significant factors of those that determine crew comfort.

Human life can be maintained in extreme environments ranging from Arctic cold to equatorial heat. The critical variable for survival is exposure time, which, for example, may range from seconds for third degree burns to days for fatal dehydration in desert heat. Thermal effects can be moderated by properly chosen clothing. Differences between individuals in response to thermal extremes are pronounced, largely due to variations in the length of adaptive period, called "acclimatization". Selection and training can influence response to any particular environment/activity/ clothing combination.

The cabin heating, circulation, and cooling systems need to be designed to maintain human comfort by controlling the atmospheric parameters of gas temperature, velocity, pressure, and humidity. Radiant heat sources must be identified and their impact on comfort assessed and controlled. The combined effects of these factors in conjunction with metabolic level and clothing worn by the crew (factors that affect skin temperature and sweat rate) largely determine comfort level. Thermal comfort definitions are discussed in Paragraph 5.8.2.2.

For many years, physiologists have sought to model the thermal environment as a single equation written as a combination of two or more factors that would accurately describe the thermal stress on humans. Frequently used thermal environmental indices include the following:

a. Dry Bulb (DB) Temperature - This is the temperature of the bulk of the air in a given environment as measured by an ordinary thermometric method.

b. Wet Bulb (WB) Temperature - This is the dynamic equilibrium temperature attained by a water surface when exposed to air under adiabatic conditions (i.e., no gain or loss of heat by the surroundings), so that the sensible heat transferred from the gas to the liquid is equal to the latent heat carried away by evaporation of water vapor into the gas.

c. Wet/Dry (WD) Index - This is defined by the equation WD - 0.85WB + 0.15DB, where either degrees F or degrees C can be used. In the absence of radiant heat and no air movement, WD is an excellent predictor of conditions stressful to humans, especially in environments having relative humidity over 50%. The WD index has often been used as a measure of heat tolerance time.

d. Effective Temperature (ET) - This is an empirical sensory index that takes into account the effects of temperature, humidity, and air movement. It is a function of DB, WB, and air velocity, as shown in Figure 5.8.2-1.

e. Globe Temperature (GT) and Wet Bulb Globe Temperature (WBGT) - The globe temperature is determined by placing a thermometer or temperature sensor in the center of a sphere 10 - 15 cm (3.9 - 5.9 in) in diameter. The sphere is constructed of thin metal, blackened for high absorptivity over the solar and infrared spectrum. The temperature inside the globe is a physical composite of DB, radiation, and convection. The GT becomes truly predicative over a wide range of environments when weighted with wet and dry bulb temperature as follows:

WGBT = 0.7WB + 0.2DB, either degrees F or degrees C.

This index is easy and inexpensive to determine and is usable over a wide range of indoor and outdoor temperatures.

f. Mean Radiant Temperature (T_{mrt}) - In relation to a given human placed at a given point with a given body position and given clothing, the Tmrt is defined as the uniform temperature of a black enclosure which would give the same heat loss by radiation from the enclosure as from the human.

g. Predicted Four-Hour Sweat Rate (P4SR) - This is determined from empirical nomograms incorporating environmental factors, work rate, and clothing, as shown in Figure 5.8.2-2. It is recommended that the P4SR not be used for predicting sweat rate, but, rather, be used for comparing environments in terms of thermal stress. The limitations of this nomogram are chiefly those of a narrow range of activity, limited clothing parameters, and the fact that the subjects used to generate the data were all acclimatized to the heat environment.

h. Insulation Value of Clothing (I_{cl}) - This is a dimensionless expression for the total heat transfer resistance from skin to the outer surface of the clothed body. Icl is defined by,

I_{cl} - (R_{cl}/0.18) (Clo)

where R_{cl} = the total heat transfer resistance from skin to the outer surface of the clothed body measured in m^2-hr-°C/kcal (ft^2-hr-°F/BTU). Clo is defined in Figure 5.8.2-3.

See Figure 5.8.2-4 and 5.8.2-5 for information to determine total body surface and total body heat radiation area respectively based on height and weight.

Air velocity and activity level are two other principal variables associated with thermal comfort.

5.8.2.1 Mission Thermal Environment Design Considerations

{A}

Certain mission phases will require special provisions in order to maintain crew thermal comfort:

a. Prelaunch - While loading the spacecraft, the cabin may be exposed to the ambient thermal environment, and maintaining strict thermal control may not be necessary or feasible.

b. Launch - The cabin atmosphere parameters of pressure, composition, air velocity, temperature, and humidity must be automatically maintained within specified limits.

c. Long Flights - Discomfort will tend to be more of a problem as mission length increases. The activities expected will likely be more varied and include a variety of levels of physical activity, including

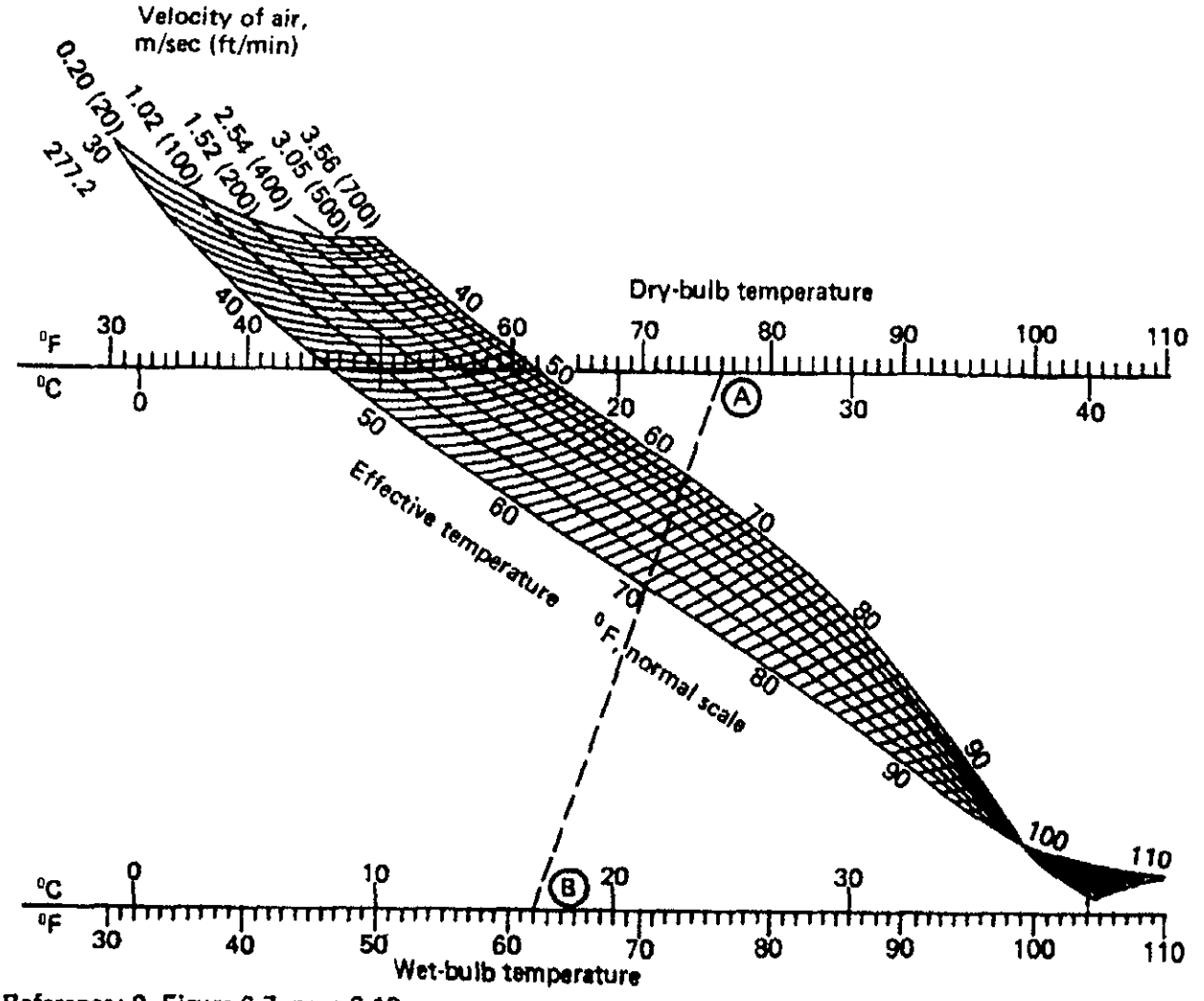

Reference: 9, Figure 6-7, page 6-13

Applicability:

Applicable to inhabitants of the United States under the following conditions: 1) Clothing: Customary indoor clothing; 2) Activity: Sedentary or light muscular work; 3) Heating methods: Convection type.

Example of the use of the chart:

Given dry bulb temperature of 76°F, wet bulb temperature of 62°F, velocity of air 100 fpm, determine: 1) effective temperature (ET) of the condition; 2) ET with still air; 3) cooling produced by the movement of the air; 4) velocity necessary to produce the condition of 66°F ET.

Solution:

1) Draw line A-B through given dry and wet bulb temperatures. Its intersection with the 100 fpm curve gives 69°F for the ET of the condition. 2) Follow line A-B to the right to its intersection with the 20 fpm velocity line, and read 70.4°F for the ET for this velocity or so-called still air. 3) The cooling produced by the movement of the air is 70.4 - 69.0 = 1.4°F ET. 4) Follow line A-B to the left until it crosses the 66°F ET line. Interpolate velocity value of 340 fpm to which the movement of the air must be increased for maximum comfort.

Figure 5.8.2-1. Thermometric Chart

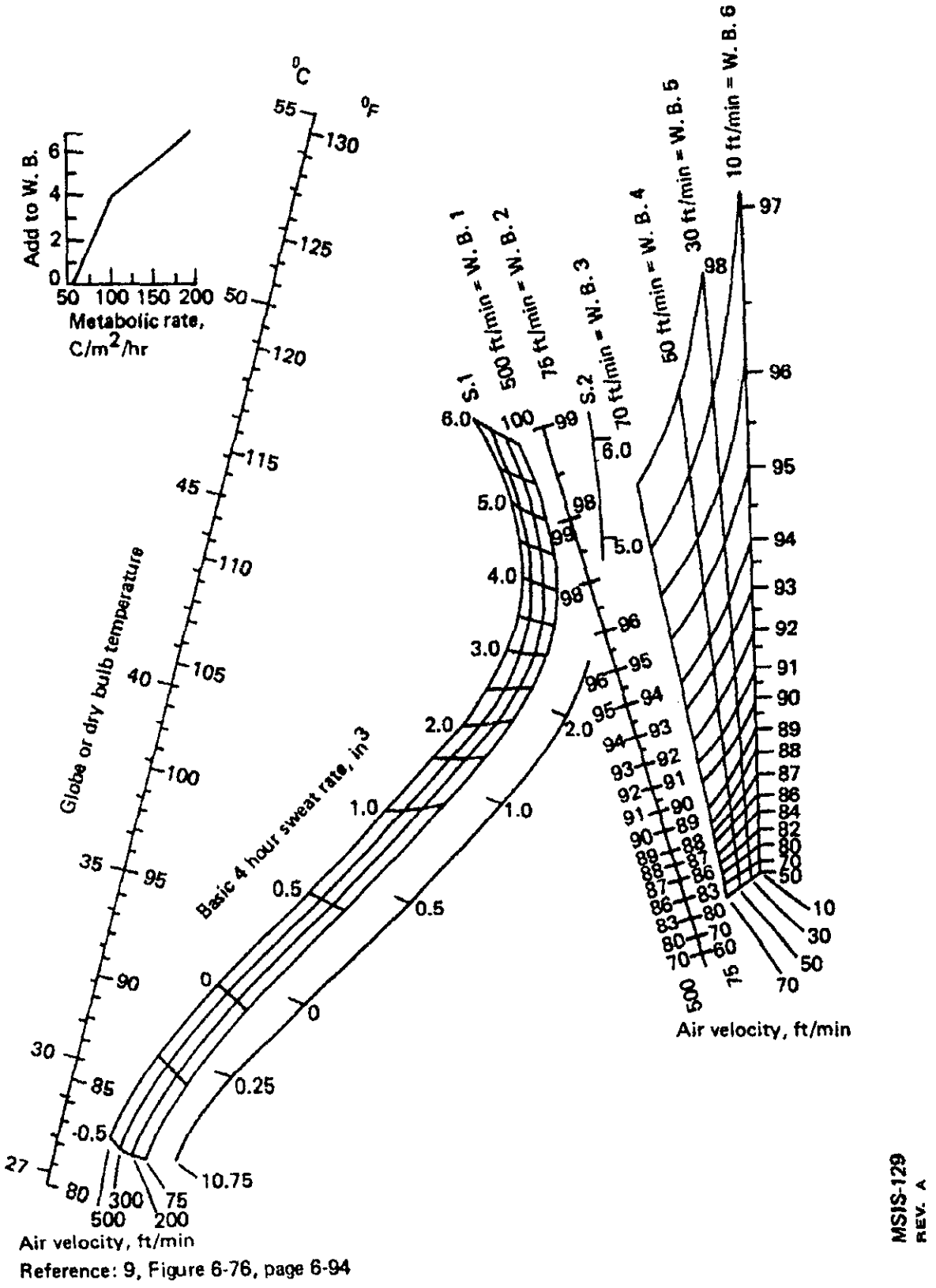

Reference: 9, Figure 6-76, page 6-94

Figure 5.8.2-2. Nomograph for the Prediction of 4-hour Sweat Loss (P4SR)

Characteristic	Metric Units	English Units
	Whole Body Data	
Weight	68 - 72 kg	150 - 160 lbs
Height	170 cm	68 - 69 in
Total body surface area	1.8 m^2	19.5 ft^2
Volume	0.07 m^3 °C	2.5 ft^3
Specific heat	0.8 cal/gm - °C	0.8 Btu/lb - °F
Heat capacity (using 160 lb man)	57.6 cal/ °C	128 Btu/ °F
Body temperature (rectal)	37 °C	98.6 ± 0.5 °F
Body surface temp.	33 - 34 °C	90 - 93 °F
Body and clothing surface temperature (ave. - 1 Clo)	28 °C	82.2 °F
Body temperature ($2/3\ t_c + 1/3\ t_s$)	35.6 °C	96.1 °F
Body percent water	70%	70%
	Skin Characteristics	
Weight	4.0 kg	8.8 lbs
Surface area	1.8 m^2	19.5 ft^2
Volume	3.6 liters	3.7 quarts
Water content	70 - 75%	70 - 75%
Specific gravity	1.1	1.1
Thickness	0.5 mm (eyelids) to 5 mm (back)	0.02 to 0.2 in
Heat production	13% (body's metabolic heat prod.)	13%
Conductance	9 → 30 kg Cal/m^2-hr - °C	
Thermal conductivity (K)	(1.5 ± 0.3) 10^{-3} cal/cm-sec- °C at 23-25 °C ambient	

MSIS-130a
REV. A

Figure 5.8.2-3 Physiological and Thermal Characteristics of An Average Man (Cont.)

Characteristic	Metric units	English units
Diffusivity ($k/_p C_p$)	7 x 10-4 cm^2/sec (surface layer 0.26 mm thck)	
Thermal inertia ($k/_p C_p$)	90 - 400 x 10^{-5} cal^2/cm^4-sec- °C^2	
Heat capacity (Cp)	0.8 cal/gm °C	0.8 btu/lb °F
Emissivity (infrared)	- 0.99	
Skin and clothing	- 0.94	
Reflectance (wave length dependent)	Max. 0.5 → 1.1μ Min. 0.3 and 1.2μ	
Transmittance (wave length dependent)	Max. 1.2, 1.7, 2.2, 6, 11μ Min. 0.5, 1.4, 1.9, 3, 7, 12μ	

Term	Definition
Clo	Insulation value of that quantity of clothing that will maintain comfortable thermal equilibrium in a man sitting at rest in an environment of: (a) 70 °F air and wall temperature, (b) less than 50% rel. humidity, and (c) 20 ft/min air movement.
1 Clo = $\frac{0.18\ ^\circ C}{\text{kg-cal/hr}}$	In combined units For 1.8 m^2 surface area
1 Clo = $\frac{0.04536\ ^\circ F}{\text{Btu/hr}}$	{1 kg-cal = 3.968 Btu
T_b	Weighted mean body temperature
T_c	Body internal (rectal) temperature
T_s	Mean Skin temperature
Heat capacity of Body periphery 40 Btu/ °F	Outer layer to skin as opposed to body cores. Approximately 1.0 inches thick
Resistance of periphery	Function of body activity and is equivalent to 0.16 to 0.70 Clo
Pain threshold for any area of skin	45 °C (113 °F)
When mean weighted skin temperature is:	The typical sensation is:
Above 35 °C (95 °F)	Unpleasantly warm
Above 34 °C (93 °F)	Comfortably warm
Below 31 °C (88 °F)	Uncomfortably warm
Below 30 °C (86 °F)	Shivering cold
Below 29 °C (84 °F)	Extremely cold

When the hands reach:	When the feet reach:	They feel:
20 °C (68 °F)	23 °C (7.5 °F)	Uncomfortably cold
15 °C (59 °F)	18 °C (64.5 °F)	Extremely cold
10 °C (5 °F)	13 °C (55 °F)	Painful and numb

Reference: 78, Figure I-205, Page 6

MSIS-130b REV. A

Figure 5.8.2-3 Physiological and Thermal Characteristics of an Average Man (Concluded)

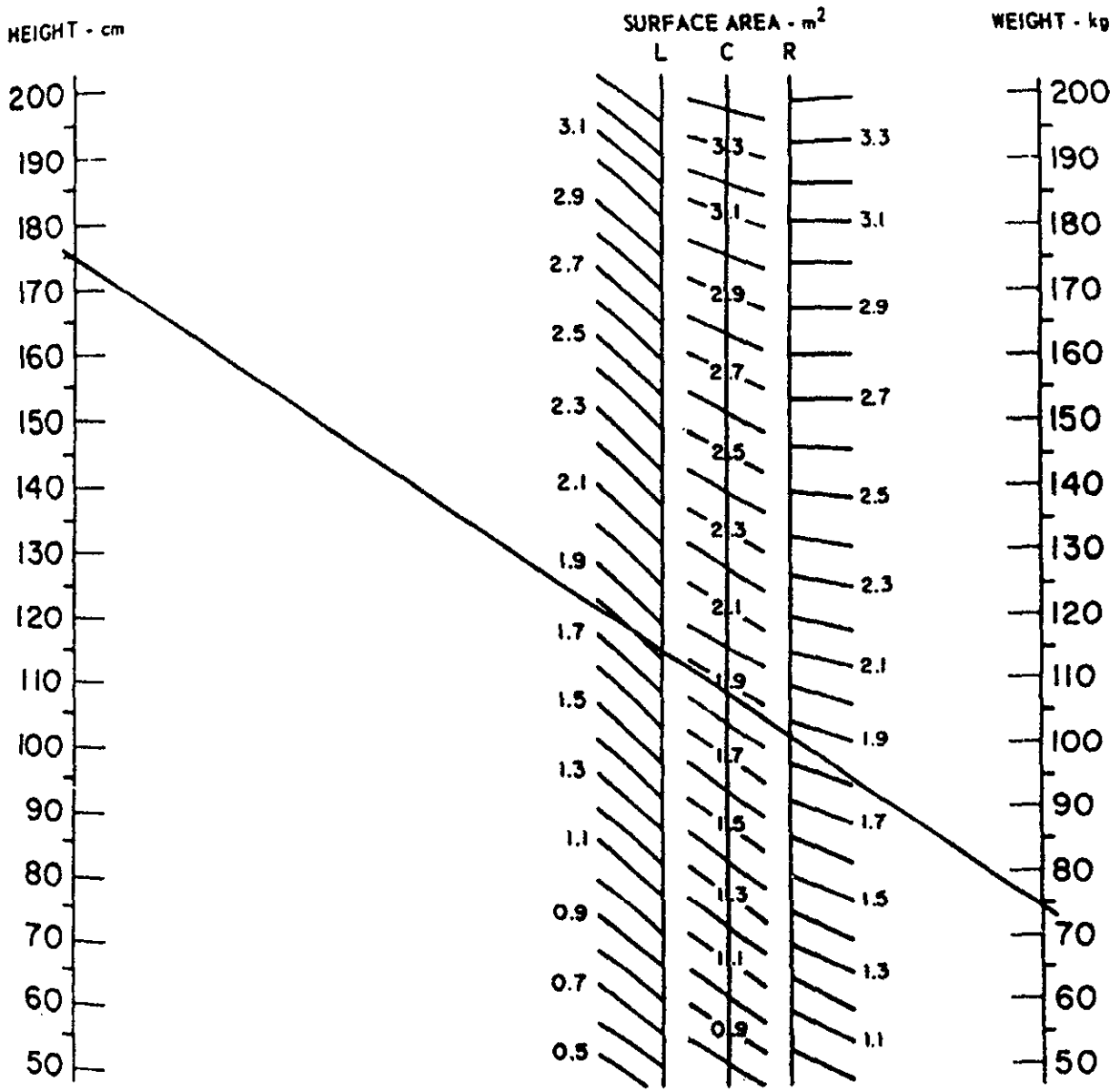

Example: To find the surface area of a male of mean height and weigh (175.5 cm, 74.4 kg), a straight line is drawn between the two appropriate points on the H and W scales. The slope of the line most nearly approximates the slope of the C-scale bar. The surface area of such an individual is approximately 1.9 m^2.

Reference: 142, page 257

MSIS 406
Rev. A

Figure 5.8.2-4 Nomogram to determine Total Human Body Surface from Height and Weight

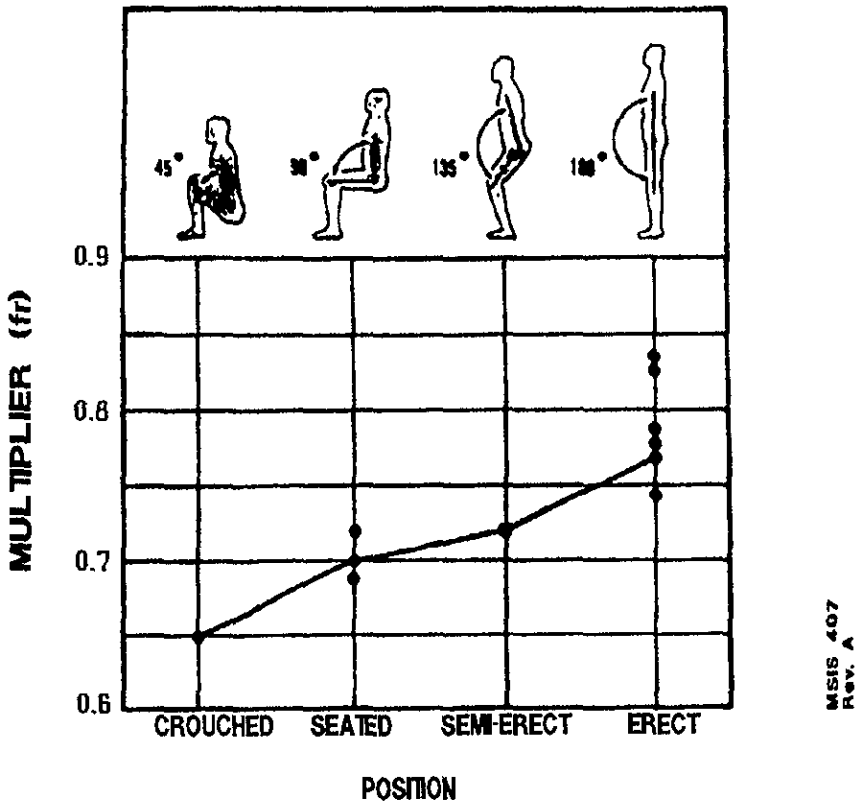

Since the total radiation area of the body varies with position, the diagram shows what multiplier (f_r) to use with total body surface area for each of four common positions. For the nude body the following steps are involved:

(1) Find the total surface area (S.A.) by:

$$S.A. \text{ (in ft}^2) = 0.108\ W^{0.425} \times H^{0.725}$$

where W is weight in pounds and H is height in inches: or

$$S.A. \text{ (in m}^2) = 0.007184\ W^{0.425} \times H^{0.725}$$

where W is weight in kg and H is height in cm (or use the nomogram, 14-12)

(2) Then, to find the total radiation area (A_r) for a given position,

$$Ar = S.A. \times f_r$$

A_r is increased by clothing, but each assembly will add its own increment. A standard set of light street clothing increases A_r by 1.14.

Reference: 142, page 158

Figure 5.8.2-5 Information to Determine Total Body Heat Radiation Area Based on Height and Weight

mandatory physical exercise. Under microgravity conditions, sweat does not drip from the body but tends to sheet on the skin and also form ringlets around the neck. Therefore, sweat removal and collection is required in the exercise area.

d. Experiment Performance - Some experiments are likely to be sensitive to the thermal environment and require special thermal control.

e. Entry - The same considerations as described for launch apply here. The thermal management system must be capable of handling the entry heat loads.

f. Post-Landing - Considerations include the delay until egress, adverse thermal environments, and a possible non-venting requirement of the internal (cabin) environment.

5.8.2.2 Human Responses to Thermal Environments Design Considerations

{A}

Thermal comfort can be defined several ways. The simplest is that condition of mind which expresses satisfaction with the thermal environment.

The primary physiological parameters related to human thermal response are skin temperature (t_s), internal or core temperature (t_c), and weighted mean body temperature (t_b). The desired circumstance is to have the body at a state of equilibrium with the environment in a condition that is comfortable, as defined above.

Comfort for humans is a subjective condition; however, thermal comfort has been mathematically defined. It is the condition in which the body core temperature is normal and the rate of body heat storage is zero. A thermal comfort equation has been developed that is based primarily on mean skin temperature (ts) and sweat secretion as a function of activity level:

Heat Conduction Through Clothing = R + C = H - D - S - Rw - Rd; where R = heat loss by respiration; C = heat loss by convection; H = internal heat production; D = heat loss by skin diffusion; S = heat loss by sweat secretion; Rw = latent heat of respiration loss; and Rd = dry respiration heat loss.

Mathematical details for the above equation are given in Reference 332.

(Also refer to Paragraph 11.13.1, Clothing.)

The comfort zone is defined as that range of environmental conditions in which humans can achieve thermal comfort, and is affected by the work rate, clothing, and state of acclimatization. Figure 5.8.2.2-1 is a graphic representation of the comfort zone. The comfort zone does not include the entire range of conditions in which humans can survive indefinitely: this is a larger zone that might require active sweating or shivering, responses initiated by elevated or lowered core temperatures. The graph implies minimal air movement and assumes the radiant temperature of the surroundings to be equal to the dry bulb temperature. The effects of acclimatization, work, and heavier clothing are shown as data trends by the arrows on the graph.

The mechanisms for thermal self-regulation and human responses to various environment are discussed in Paragraphs 5.8.2.2.1 through 5.8.2.2.5.

5.8.2.2.1 Modes of Heat Exchange Design Considerations

{A}

Heat is exchanged between humans and the environment through four processes:

a. Radiation - Exchanges of radiation may occur with surfaces having higher or lower temperatures than that of the skin. Radiation may also be absorbed by the skin from high-temperature sources such as the Sun.

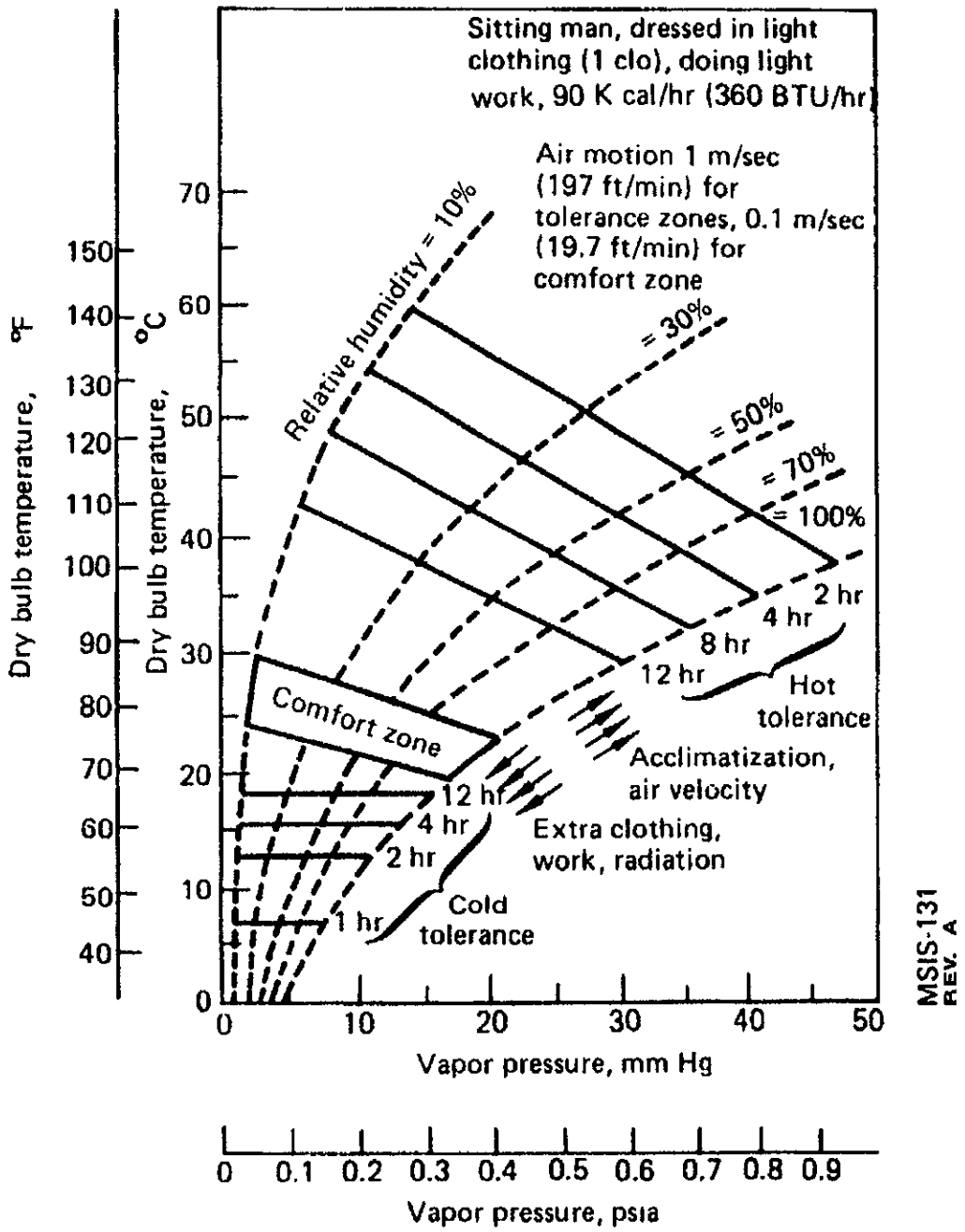

Reference: 19, subnote 7(1), page 5

Figure 5.8.2.2-1. Environmental Requirements

b. Convection - The body may exchange heat by air convection. This is an important source of heat loss, especially if the air velocity around the body is high and the air temperature is low.

c. Conduction - Heat may be exchanged by conduction with objects in direct contact with the body.

d. Vaporization - Heat may be lost by vaporization from the lungs through respiration and from the skin by sweating.

Heat is also lost in urine and feces. The body stores heat in the tissues and body fluids. This stored heat is the currency with which body heat balance is purchased.

5.8.2.2.2 Thermoregulation by the Body Design Considerations

{A}

The simplest and most accurate way of representing the body thermally is by the "core-shell" concept. In this view, the body core produces heat that is lost to the environment through the shell (skin). Using sensors in both the core and shell for information feedback, the body attempts to maintain the temperature of the core. The body has several techniques for generating or dissipating heat:

a. Heat Dissipation - When challenged by a hot environment, the body uses three methods, in combination, to dissipate the heat:

1. Vasodilation causes an increase in the blood flow to the skin. This increases the conductivity of the skin and increases the skin temperature, allowing a more rapid heat loss by convection and radiation from the body to the environment.

2. Sweating dissipates body heat by evaporation. If the environmental temperature is greater than the blood temperature, sweating is the only means by which the body can maintain its heat balance.

3. Behavior is an important factor. When a person gets uncomfortably warm, he attempts to cool off by moving to a cooler environment, decreasing physical activity, and seeking shade to avoid radiant heat sources.

b. Heat Generation - The three principal means of defense against cold are the following:

1. Vasoconstriction - The blood flow to the skin is reduced, increasing shell insulation and decreasing skin temperature, both of which reduce heat loss to the environment.

2. Thermogenesis - The body increases heat production by shivering.

3. Behavior - A cold person attempts to move to warmth, put on more clothing, engage in exercise, etc.

The consensus of physiologists is that a human can acclimate effectively to heat but not to cold. Under continued heat stress the body will develop higher sweat rates at lower skin temperatures, i.e., becomes more efficient in providing evaporative cooling. No comparable physiological acclimatizations have been detected for extended periods of cold stress. (Heat and cold acclimation is discussed further in Paragraphs 5.8.2.2.3 and 5.8.2.2.4.)

c. Regulation During Work - When a person is engaged in physical activity, the body's regulatory system must consider three extra tasks: 1) the muscles produce extra heat that must be dissipated, 2) more blood flow must be supplied to the working muscles, and 3) the body develops higher core temperature (how high is dependent upon the workload). These factors usually interfere with thermo-

regulation in the heat and assist it in the cold.

d. Environmental Factors Affecting Heat Exchange - Although the body can control its rate of heat transfer to the environment, the heat exchange itself is governed by physical laws. Therefore, the physical environment is important in its effect on transfer. Some environmental factors that influence heat exchange are:

1. Air temperature, which directly influences convective transfer and sweat evaporation.

2. Humidity, which has an important effect on sweat evaporation rate and insensible (respiratory and skin diffusion) water vapor loss.

3. Air velocity, which is an extremely important factor in convection and evaporation.

4. Radiation from the Sun and other sources, including sunlight reflected from the environment. Radiant heat effects on the body are also directly related to cabin wall surface temperatures.

5. Sensible and insensible water vapor loss rates are influenced by the vapor resistance of the clothing worn.

6. The convective heat transfer coefficient is affected by microgravity as described in Paragraph 5.8.2.2.2.1.

5.8.2.2.2.1 Microgravity Effects on the Thermal Environment

{O}

The principal effect of a microgravity environment on heat transfer is the loss of natural convection, i.e, warmer air will not naturally rise. All convection under these conditions must be forced through the use of fans or blowers. In the steady-state heat balance equation, microgravity will only affect the convective heat transfer coefficient, hc. However, the forced convection heat transfer coefficient has been derived empirically for a 1-G gravity environment and hence includes a residual natural convection influence that must be subtracted before use under microgravity conditions. A development of the hc correction for microgravity has been detailed in Reference 332.

A heat-measuring device called an electric dynamic katathermometer (EDK) has been developed which automatically and continuously scans heat output from a surface, e.g., skin, chamber wall, or equipment surfaces. Results obtained with this device show that skin temperatures measured in microgravity differ markedly, both for rest and work situations, from those obtained under 1-G. These results showed a comparable increase in skin temperature of the chest and a decrease in the temperature of the extremities. Data obtained also indicated that the space chamber microgravity atmosphere has greater cooling capacity than did a similar test chamber on Earth.

5.8.2.2.3 Human Performance in Heat Design Considerations

{A}

Performing heavy work results in elevated skin temperature followed by elevated body core temperature. Vasodilation and sweating commence, but cannot completely compensate for the heat load on the body. As the core temperature continues to rise, the heart rate increases and eventually may reach 70 beats per minute (or more) above normal. As the body continues to store heat, the individual may suffer from heat exhaustion. This is characterized by hypotension, difficulty with breathing (dyspnea), confusion, and fainting.

A person performing moderate or heavy work will develop higher core temperatures before onset of heat exhaustion. Occasionally, people hard at work in the heat experience almost none of the above symptoms and suddenly faint or, in some rare instances, go

directly into heat stroke.

Heat tolerance limits are usually defined in three ways:

a. Maximum Allowable Internal Temperature - About 39°C (102°F) for a resting or lightly working person, but can be above 40°C (104°F) for a person at hard work.

b. Maximum Allowable Heat Storage - About 2.7 kcal/ kg (4.9 BTU/lb) of body weight, or about 135 kcal/m2 (49.9 BTU/ft^2) of body surface area. The body heat storage index (qs), is defined as the steady state rate of heat loss or gain to the body which results from imbalance in the biothermal equation:

Body Heat Storage Index, qs = 0.83 BW (tb -36), kcal where tb = 1/3 ts + 2/3 tc

BW = body weight in kilograms. If the rate of body temperature change is known, then the body heat storage index can be calculated. See Paragraph 5.8.2.2 for symbol definitions.

c. Tolerance Times with Respect to Various Environmental Indices - Figure 5.8.2.2.3-1 shows the tolerance times plotted for three of the indices defined in Paragraph 5.8.2.

5.8.2.2.4 Human Performance in Cold Design Considerations

{A}

In a cold stress situation, the body will rapidly reduce peripheral circulation in an attempt to conserve core heat. As the core and skin temperatures continue to drop, shivering begins and discomfort is continually present. Eventually shivering may become violent and uncontrollable. As the core continues to lose heat, shivering eventually lessens, then stops altogether. At this point, complete loss of thermoregulation is imminent. Death, however, may not come quickly. The core temperature can be drastically reduced, to 26°C (78.6 °F) or lower, with the body still surviving. With such extreme cooling of the core, death can occur when attempts are made to rewarm the body, cardiac fibrillation being the common cause of death.

A hypothermia victim becomes critical when the core temperature drops to about 35°C (95°F). The environmental indices used for heat exposure are not considered appropriate for cold because humidity is not a factor because air saturated at 0°C (32oF) holds only 1/5 of the water vapor as air saturated at 27°C (80°F). In the absence of high air velocity, the most widely used cold stress indicator is dry bulb temperature. Figure 5.8.2.2.4-1 gives some approximate tolerance times in cold air environments, assuming no radiation effects and a fixed clothing insulation factor.

In cold air, even a moderate air velocity will dominate other modes of heat transfer from exposed skin (see the windchill indices in Figure 5.8.2.2.4-2). Regardless of the air velocity, frostbite will not occur unless the true dry bulb is below 0°C. (32°F). In addition, the effect of moderate air velocity is only applicable to exposed skin; there is little effect on clothing up to velocities of 10-15 m/s, (32.8 - 49.2 ft/sec). Above this limit, the effects are complex; the principal danger is the formation of local cold spots on the exposed side of the body, resulting in excessive heat loss from small areas.

(Refer to Paragraph 11.13.1, IVA Clothing, for more details on clothing.)

If the surface temperature of the hand falls below 12° - 14°C (54° - 57°F), manipulative ability begins to fail. As the hand temperature drops lower, more serious loss of manipulation ability occurs, partly from stiffness and partly from the loss of tactual sensitivity. The final decrement is caused by the loss of brain functioning due to a drop in core temperature. The brain loses the capacity for cognitive functions if its temperature drops much below 34° - 35°C (93° - 95°F) even though the body is

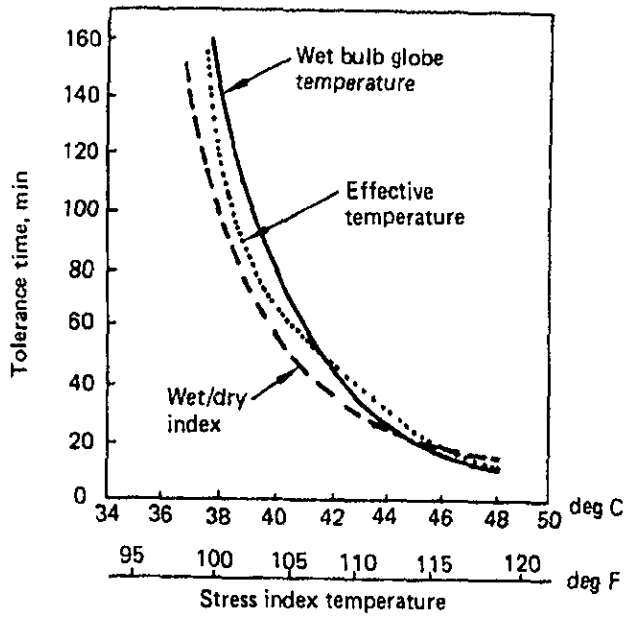

Reference: 19, Figure 2.2(1)

Figure 5.8.2.2.3-1 Human Heat Tolerance Time

MSIS-292

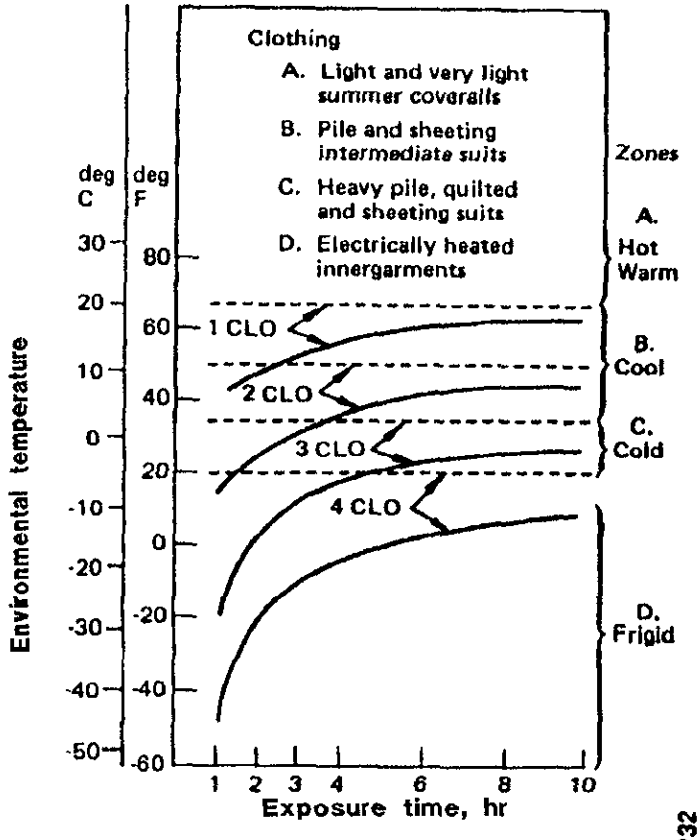

Reference: 19, Figure 3.2(1)

Figure 5.8.2.2.4-1 Human Tolerance Times in Cold Environments

MSIS-132

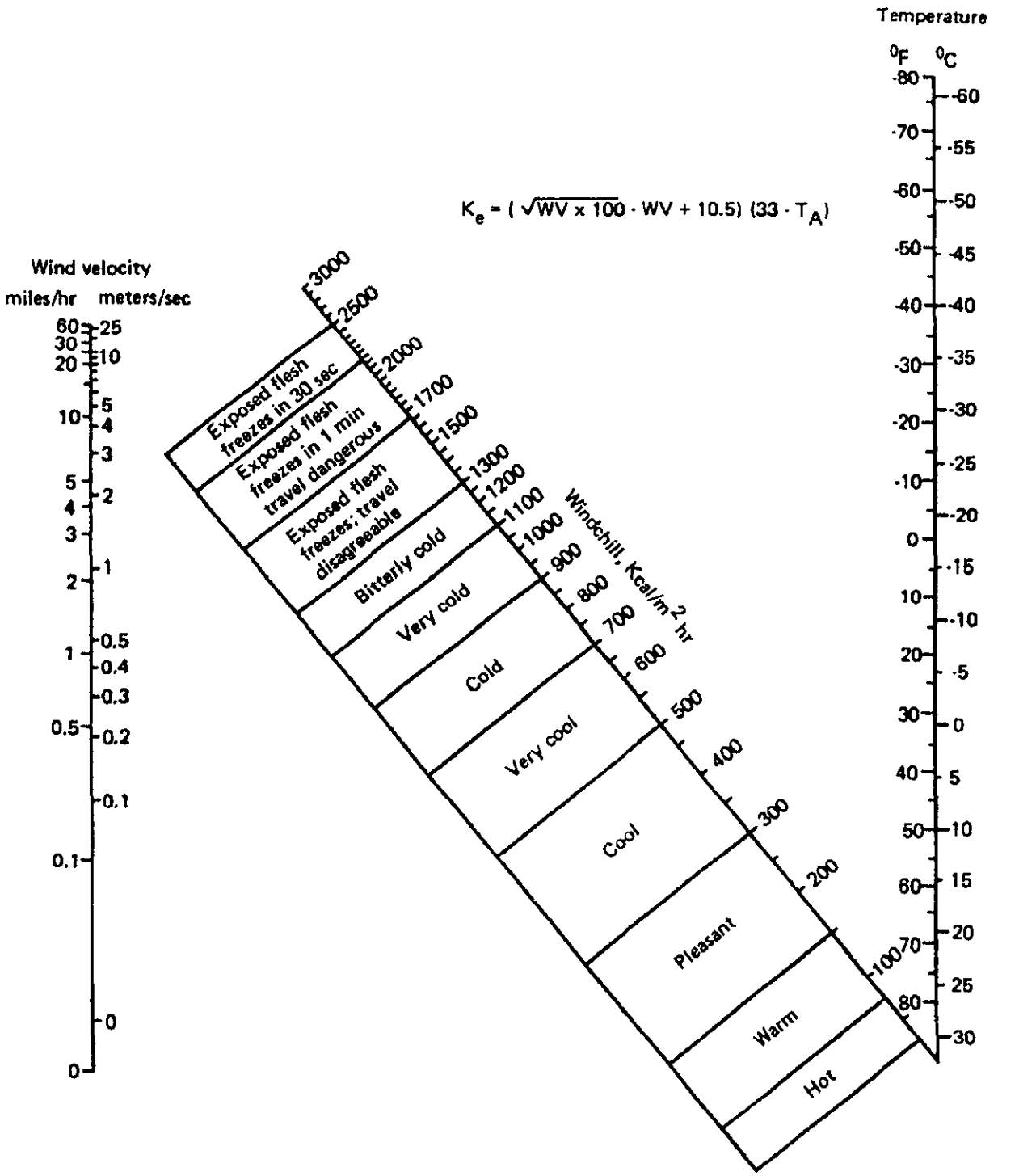

Reference: 19, Figure 3.3(1)

Note:
The windchill index does not account for physiological adaptations or adjustments and should not be used in a rigorous manner. It is based on field measurements during World War II of the rate of cooling of a container of water.

MSIS-133
REV. A

Figure 5.8.2.2.4-2. Windchill Index

still capable of responding to instruction.

5.8.2.2.5 Special Ventilation & Metabolic Heat Removal Design Considerations

{A}

The requirements for manned space module ventilation cannot be based on ground-based systems due to an absence of convective airflow. The primary reason for specifying air velocity limits is to extend the range of acceptable environments for the crewmembers.

The amount of air required in any region of the cabin depends on the number of crew present and on their work activity. The recommended amount of air for adults engaged in moderate physical activity ranges from 2.4 - 14.2 liters/ sec (5 to 30 ft^3/min) per person, with approximately two-thirds of this being fresh revitalized air. The range of metabolic heat added to the module atmosphere is given in Figure 5.8.2.2.5-1. This table shows the amount of heat generated by the crew which must be removed by the ECLSS.

Special consideration in a space module should be given to the following areas:

a. Exercise Station - This area should have an increase in airflow in order to increase heat transfer and to relieve sweat accumulation. Individual airflow units with air temperature control will help the crewmember match the airflow to the activity. The direction of airflow should not blow sweat into other station areas, particularly eating or sleeping stations, and should blow over the entire body, not just one part.

b. Sleeping Station - Individually adjustable airflow controls are desirable.

c. Eating Station - Airflow should not blow loose morsels of food away from crewmembers so swiftly that they cannot be recovered.

d. Ventilator Intakes - Ventilation system intakes should be accessible to crew for recovery of lost objects. Airflow in the vicinity of the inlets should not exceed 0.2 m/sec (40 ft/min).

The ventilation rates used in the cabin should be sufficient to control local air contamination by body products or from noxious substances in the compartment. The cabin ventilation airflow should be sufficient to dilute contaminants and divert them from the crewmembers.

In summary, the thermal comfort design objectives are that body thermal storage be zero, that evaporative heat losses be limited to insensible evaporation of moisture produced only by respiration and diffusion through the skin without the activity of the sweat glands, and that body and skin temperatures be maintained near the normal values of 37°C (98.6°F) and 33° to 34°C (91.5° to 93.5°F) for a resting person.

5.8.3 Thermal Environment Design Requirements

{A}

Paragraphs 5.8.3.1 and 5.8.3.2 provide the design requirements for spacecraft cabin thermal environments.

5.8.3.1 Temperature, Humidity, and Ventilation Design Requirements

{A}

The following design requirements shall apply to the thermal environment:

a. Atmospheric Parameters - The atmospheric temperature, humidity, and ventilation rates shall meet the requirements in Figure 5.8.3.1-1 (these values are shown graphically in Figure 5.8.3.1-2).

Metric Units

Low metablic load

Cabin temperature, °C	Kcal/hr	18 hrs	Total	Kcal/hr	21 hrs	Total	Kcal/hr	24 hrs	Total
Sensible									
Sleep	57.9	8	463	57.9	8	463	57.9	8	463
Lt wk	90.7	8	725	79.3	8	635	68.0	8	544
Md wk	94.5	8	756	81.9	8	655	68.0	8	544
Total			1944			1753			1551
Latent									
Sleep	17.6	8	141	17.6	8	141	17.6	8	141
Lt wk	22.7	8	182	34.0	8	272	45.3	8	363
Md wk	44.1	8	352	56.7	8	453	70.5	8	564
Total			675			866			1068
Total metabolic rate (Kcal/man-day)			2619			2619			2619

Nominal metabolic load

Cabin temperature, °C	Kcal/hr	18 hrs	Total	Kcal/hr	21 hrs	Total	Kcal/hr	24 hrs	Total
Sensible									
Sleep	57.9	8	463	57.9	8	463	57.9	8	463
Lt wk	90.6	5	453	79.3	5	397	68.0	5	340
Md wk	94.5	9	850	81.9	9	737	68.0	9	612
Hv wk	98.2	2	196	84.4	2	169	68.0	2	136
Total			1962			1766			1551
Latent									
Sleep	17.6	8	141	17.6	8	141	17.6	8	141
Lt wk	22.7	5	114	34.0	5	170	45.3	5	227
Md wk	44.1	9	397	56.7	9	510	70.5	9	635
Hv wk	103.2	2	207	117.1	2	234	133.5	2	267
Total			859			1055			1270
Total metabolic rate (Kcal/man-day)			2821			2821			2821

High Metabolic load

Cabin temperature, °C	Kcal/hr	18 hrs	Total	Kcal/hr	21 hrs	Total	Kcal/hr	24 hrs	Total
Sensible									
Sleep	57.9	8	463	57.9	8	463	57.9	8	463
Lt wk	90.6	4	362	79.3	4	317	68.0	4	272
Md wk	94.5	4	378	81.9	4	328	68.0	4	272
Hv wk	98.2	8	786	84.4	8	675	68.0	8	544
Total			1989			1783			1551
Latent									
Sleep	17.6	8	141	17.6	8	141	17.6	8	141
Lt wk	22.7	4	91	34.0	4	136	45.3	4	181
Md wk	44.1	4	176	56.7	4	227	70.5	4	281
Hv wk	103.1	8	827	117.1	8	937	133.5	8	1068
Total			1234			1441			1673
Total metabolic rate (Kcal/man-day)			3224			3224			3224

Reference: 348, Table 3, Page 12

MSIS-293 REV. A

Figure 5.8.2.2.5-1 Metabolic Heat Generation Matrix (Cont.)

English Units

Low metablic load

Cabin temperature, deg F	Btu/hr	65° hrs	Total	Btu/hr	70° hrs	Total	Btu/hr	75° hrs	Total
Sensible									
Sleep	230	8	1840	230	8	1840	230	8	1840
Lt wk	360	8	2880	325	8	2520	270	8	2160
Md wk	375	8	3000	325	8	2600	270	8	2160
Total			7720			6960			6160
Latent									
Sleep	70	8	560	70	8	560	70	8	560
Lt wk	90	8	720	135	8	1080	180	8	1440
Md wk	175	8	1400	225	8	1800	280	8	2240
Total			2680			3440			4240
Total metabolic rate (Btu/man-day)			10,400			10,400			10,400

Nominal metabolic load

Cabin temperature, deg F	Btu/hr	65° hrs	Total	Btu/hr	70° hrs	Total	Btu/hr	75° hrs	Total
Sensible									
Sleep	230	8	1840	230	8	1840	230	8	1840
Lt wk	360	5	1800	315	5	1575	270	5	1350
Md wk	375	9	3375	325	9	2925	270	9	2430
Hv wk	390	2	780	335	2	670	270	2	540
Total			7795			7010			6160
Latent									
Sleep	70	8	560	70	8	560	70	8	560
Lt wk	90	5	450	135	5	675	180	5	900
Md wk	175	9	1575	225	9	2025	280	9	2520
Hv wk	410	2	820	465	2	930	530	2	1060
Total			3405			4190			5040
Total metabolic rate (Btu/man-day)			11,200			11,200			11,200

High Metabolic load

Cabin temperature, deg F	Btu/hr	65° hrs	Total	Btu/hr	70° hrs	Total	Btu/hr	75° hrs	Total
Sensible									
Sleep	230	8	1840	230	8	1840	230	8	1840
Lt wk	360	4	1440	315	4	1260	270	4	1080
Md wk	375	4	1500	325	4	1300	270	4	1080
Hv wk	390	8	3120	335	8	2680	270	8	2160
Total			7900			7080			6160
Latent									
Sleep	70	8	560	70	8	560	70	8	560
Lt wk	90	4	360	135	4	540	180	4	720
Md wk	175	4	700	225	4	900	280	4	1120
Hv wk	410	8	3280	465	8	3720	530	8	4248
Total			4900			5720			6640
Total metabolic rate (Btu/man-day)			12,800			12,800			12,800

MSIS-293a

Reference: 348, Table 3, Page 12

Figure 5.8.2.2.5-1 Metabolic Heat Generation Matrix (Concluded)

Parameter	Units	Operational	28-day emergency
Temperature (1)	°F	65-80	60-85
Dew point (2)	°F	40-60	35-70
Ventiliation	ft/min	15-40	10-200
		SI units	
Temperature (1)	°K	292 300	289 303
Dew point (2)	°K	278 289	274 294
Ventiliation	m/sec	.08 .20	.05 1.0
Temperature (1)	°C	19 27	16 30
Dew Point (2)	°C	5 16	1 21

Reference: 5, Figure 83, Page 302
324, Table 2-9

Notes:

(1) In the operational mode temperature will be selectable ±1.1 °C (±2 °F) throughout the range
(2) Relative humidity shall be within the range of 25-75 percent

MSIS-136
REV. A

Figure 5.8.3.1-1. Atmosphere Thermal Comfort Requirements

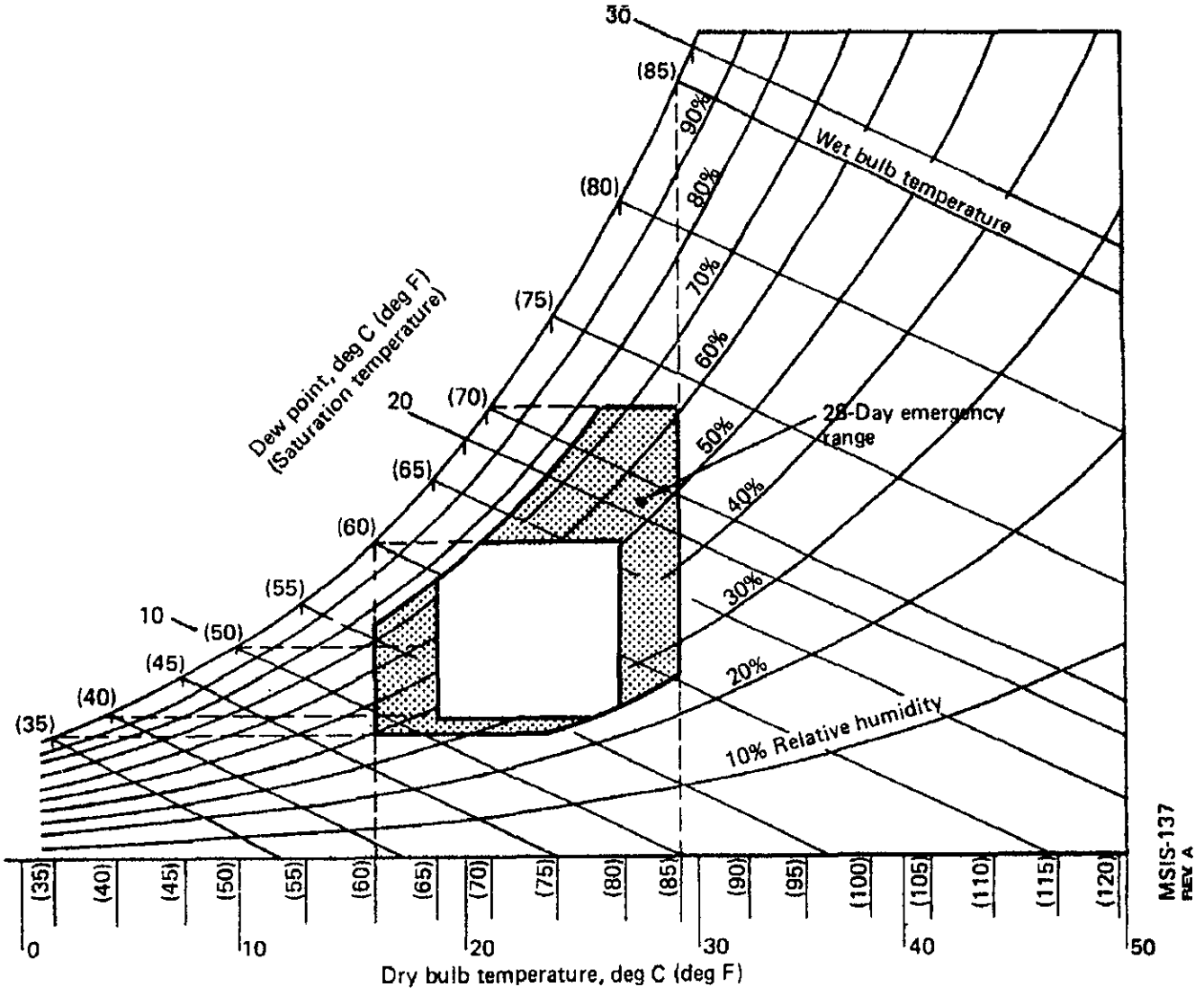

Reference: 278, Figure C-20
324, Table 2-9

Figure 5.8.3.1-2 14.7 psia Standard Atmosphere Parametric Limits - Dry Bulb, Dew Point, Relative Humidity

5.8.3.2 Thermal Monitoring and Control Design Requirements

{A}

The following requirements shall apply to the monitoring and control of the space cabin thermal environment:

(Refer to Paragraph 9.3, Controls, and Paragraph 9.4, Displays, for specific details on control and display requirements)

a. Monitoring of Thermal Environment -

1. Monitoring of cabin temperature and relative humidity shall be provided.

2. Monitoring of the thermal environment shall be fully automatic. The number, type, and location of temperature sensors and the frequency of monitoring shall be such as to ensure measurement of representative cabin temperature and to allow stable control of those temperatures.

3. Visual and audible alarms shall be automatically initiated when thermal parameters exceed the limits given in Paragraph 5.8.3.1.

(Refer to Paragraph 9.4.4, Caution and Warning Displays, for specific requirements for implementing the caution and warning system.)

b. Adjustment of Thermal Environment by the Crew - Crewmembers shall be provided with controls that allow them to modify temperatures, humidity, and ventilation rates inside the space module within the ranges for these parameters as specified in Paragraph 5.8.3.1.

c. Sleep Compartment, Personal Hygiene Area, and Waste Management Compartment Thermal Environment Controls - Temperature and ventilation shall be maintained in each of the private crew quarters, the personal hygiene area, and the waste management compartment, and shall be controlled in each of these areas within the range of these parameters.

d. Portable Fans - If activity stations are isolated from the module air circulation systems, auxiliary airflow and/or portable fans shall be provided.

e. Exercise Station Perspiration Control - Each exercise station shall be provided with a method of sweat removal and collection.

5.9 COMBINED ENVIRONMENTAL EFFECTS

{A}

5.9.1 Introduction

{A}

This section provides design considerations and requirements for combined environments.

5.9.2 Combined Environmental Effects Design Considerations

{A}

In the previous subsections of Paragraph 5.0, the physical environments (acceleration, vibration, thermal, etc.), human responses to these environments, and the environmental design limits that are based on these human responses, have been given as if each of the physical environments existed by itself. In aerospace operational environments this is rarely, if ever, the case. The space module and its crewmembers are exposed to an intricate interplay of several of these environments. For example, during launch, the crewmembers are subjected to the simultaneous stresses of linear and angular rotation, vibration, and noise.

Data that define the design requirements for combined environmental effects are virtually nonexistent. Relatively few laboratory studies have been devoted to the investigation of tolerance levels, physiological effects, or performance effects during exposure to two environmental stressors. There are even fewer studies involving three or more stressors.

The following figures summarize some of the research findings on the physiological effects of combined environmental stressors. The reader is cautioned to be aware that in these figures there are apparent contradictory findings. This may be due to one researcher having concentrated on a single combination of environmental parameters and reflecting the findings specific to these parameters, whereas, another researcher has examined a range of combinations of environmental parameters, resulting in more generalized conclusions. This emphasizes why this kind of combined stressor data must be used with caution.

Figure 5.9.2-1 contains some examples of how certain physical environments affect physiological functions.

Figure 5.9.2-2 describes the experimental findings on combined environmental stresses when acceleration is the primary stressor.

Figure 5.9.2-3 describes the experimental findings on combined environmental stresses when vibration is the primary stressor.

Figure 5.9.2-4 describes the experimental findings on combined environmental stresses when noise is the primary stressor.

Figure 5.9.2-5 provides a summary of the effects of heat, noise, and sleep deprivation on performance.

Figure 5.9.2-6 describes the experimental findings on combined environmental stresses when simulated weightlessness (bed rest or water immersion) is the primary stressor.

Figure 5.9.2-7 describes the experimental findings on combined environmental stresses when cold temperature is the primary stressor.

Figure 5.9.2-8 describes the experimental findings on combined environmental stresses when heat is the primary stressor.

Figure 5.9.2-9 describes the experimental findings on combined environmental stresses when hypoxia is the primary stressor.

Figure 5.9.2-10 describes the experimental findings on combined environmental stresses when ionizing radiation is the primary stressor.

Refer to Reference 92, Chapter 19, for further discussion of combined environmental effects and a summary of the limited amount of data.

While there are no agreed-upon design standards for combined environmental effects, in light of the data in the figures cited above, it is prudent to consider, as a minimum, the following precautions:

a. Work Around - Avoid the assignment of critical tasks (e.g., complex cognitive tasks, complex coordination tasks, etc.) during exposure to combined stressors.

b. Exposure Beyond - When considering human exposure beyond that previously experienced extreme caution is required. Objectives should be clearly identified and maximum controls used to minimize danger.

c. Assumption of Effects - Assume neither positive or negative synergistic effects when crewmembers are exposed to multiple environmental stressors. (While adverse synergistic effects should not be assumed, they should certainly be considered.)

The process of assessing the effects of the combined environments to which the crewmember will be subjected should include careful review of each of the applicable previous sections.

d. Protective Gear - Consider the use of protective clothing and equipment, taking into account any decrements in performance that such clothing and equipment might cause.

e. Nondesign Solutions - Give careful consideration to nondesign solutions. For example, if a critical task's performance must be of high quality, consider recommending significant amounts of extra training with respect to such tasks.

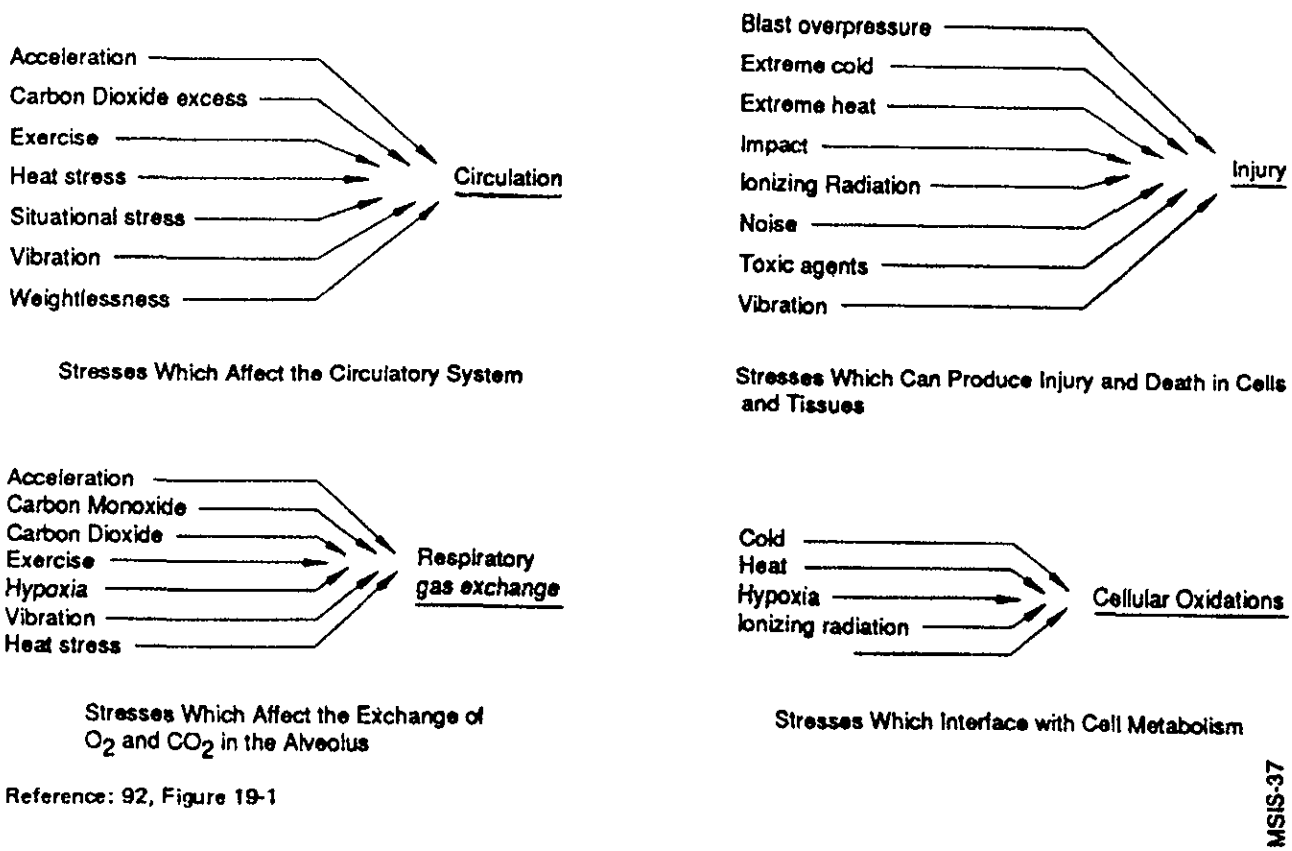

Figure 5.9.2-1. Common Mechanisms of Action of Selected Environmental Stress

Stresses	Test Animal	Measures	Effect	Physiological Interaction
Acceleration and hypoxia	Man	G-tolerance (peripheral light loss)	Hypoxia decreases + G_z tolerance	Additive
Acceleration (angular) and hypoxia	Man	Nystagmus	Hypoxia causes smaller change in nystagmus than apprehension	None
Acceleration and heat/cold	Man	G tolerance (peripheral light loss)	Heat lowers G tolerance. Cold raises G tolerance	Additive, synergistic
Acceleration and heat	Man	G tolerance (peripheral light loss)	Heat lowers G tolerance	Additive
Acceleration and heat/cold	Mice	Survival time	High environmental temperature decreases and cold increases the tolerance of mice to positive acceleration	Additive, antagonistic
Acceleration (vertical tilt) and heat	Man	Heat rate, fore-arm blood flow, blood pressure, rectal tempera-ture	Heat lowers tilt tolerance. Heart rate is higher, blood pressure is lower, and syncope is more common in heat	Additive
Acceleration and cold	Rats	Survival time	Hypothermia (22.5 deg C) improves tolerance to - G_z at levels of 30–40G	Antagonistic
Acceleration and heat	Man	Peripheral light loss	Prior heat stress producing minimal dehydration (1–3% body weight) decreases acceleration tolerance 15–18%)	Additive
Acceleration and dehydration	Man	Peripheral light loss	Prior heat stress producing dehydration decreases acceleration tolerance	Additive
Acceleration and hyperoxia	Man	Pulmonary function tests	Breathing 100% O_2 during acceleration does not interact with with tolerance but does ameliorate acceleration-induced atelectasis*	Variable

MSIS-38

Reference: 92, Table 19-1

Figure 5.9.2-2. Combined Stress–Acceleration the Primary Stressor

Stresses	Test Animal	Measures	Effect	Physiological Interaction
Vibration and acceleration	Man	Whole body mechanical impedance	Vibration (+0.4G at 2.5–20 Hz) combined with linear acceleration (1, 2 1/2, and 4G) produces increased stiffness, reduces damping, and increases energy transmission to internal organs	Additive
Vibration and acceleration	Man	Compensatory tracking task	Vibration (0 – +3.0G at 11 Hz) combined with linear acceleration (1–3.5G) produces performance decrements not significantly different from vibration alone	None
Vibration and heat	Rats	Mortality	Incidence of mortality (62%) is greater after 20 min exposure to heat (46.1deg C) and random vibration (5-800 Hz 17.5G RMS) in combination than singly	Additive
Vibration and hypoxia	Rats	Mortality	Mortality of restrained rats increases directly with hypoxia (altitude 8–18,000 ft) during $+G_x$ vibration (60 Hz 15G peak acceleration)	Additive
Vibration and pressure breathing	Mouse	Mortality, tissue change	Pressure breathing (4 in. H_2O) reduces mortality of mice exposed to 10 min of 20 Hz random vibration (7.07G RMS)	Antagonistic
Vibration and acceleration	Man	Visual performance	($+3.85G_x$) acceleration improves the visual performance decrement associated with (11 Hz $\pm G_x$) vibration	Antagonistic
Vibration and carbon dioxide	Man	Ventilation	$+G_z$ vibration (40 Hz) and increased inspired CO_2 both increase ventilation but are not additive in combination	None
Vibration and noise	Man	Physiological measures, performance	$+G_z$ vibration (semirandom) (.16–.4 RMSg) and noise (~112 dB) have no significant effect on multiple performance measures or physiological responses in simulated helicopter flight	None
Vibration and noise and temperature	Primate, man	Sleep-stage EEG, performance	$+G_z$ vibration (.7 RMS), noise (102 dB), and heat (90 deg F) in combination produce significant sleep disturbance and performance decrement (shock avoidance)	Additive
Vibration and noise	Man	Performance (compensatory tracking and reaction time)	Noise (100 dB) and vibration (0.25 $+G_z$, 5 Hz) produce additive decrement in vertical component of compensatory tracking task	Additive
Vibration and drugs	Mice	Mortality, tissue damage	Mortality is decreased significantly by CNS depressant and increased by CNS stimulants	Not examined

Reference: 92, Table 19-2

MSIS-39

Figure 5.9.2-3. Combined Stress–Vibration the Primary Stressor

Stresses	Test Animal	Measures	Effect	Physiological Interaction
Noise and heat	Man	Performance task battery	Noise (90 dB) and heat (87deg ET) produce no significant performance decrement, singly or in combination	None
Noise and heat and sleep deprivation		Performance (tracking and serial reaction)	See Figure 5.9.2-5	Heat and noise–none; noise and sleep deprivation–antagonistic
Noise and vibration	Man	Performance	See Figure 5.9.2-3	Additive
Noise and vibration	Man	Performance, physiological measures	See Figure 5.9.2-3	None
Noise and vibration and heat	Primate	Sleep (EEG), performance	See Figure 5.9.2-3	Additive
Vibration and noise	Man (adolescent boys)	Sensitivity to vibration	Results vary widely with time of day and work experience with vibration. In general, vibration causes decrease in sensitivity. Exposure to noise and vibration varies but prolonged exposure to both causes a greater decrease in sensitivity	Not examined

Reference: 92, Table 19-3

MSIS-40

Figure 5.9.2-4. Combined Stress–Noise the Primary Stressor

Stress	Speed	Errors	Place in work period where effect appears	Effect of incentives	Physiological interaction	
					Heat	Noise
Heat	No effect	Increased	Throughout	(No effect)*	——	None
Noise	No effect**	Increased**	End**	Impairs performance	(None)	——
Sleep deprivation	Reduced**	No effect**	End**	No effect or improved	None	Reduced effect (antagonistic)

Reference: 92, Table 19-4

MSIS-41

Notes:

* Results in brackets not from the serial reaction test and not strictly comparable

** Based on the results of more than one study and felt to be more reliable

Figure 5.9.2-5. Summary of the Effects of Heat, Noise, and Sleep Deprivation on Performance

Stresses	Test Animal	Measures	Effect	Physiological interaction
Bed rest and hypoxia	Man	Orthostatic tolerance, blood volume, metabolism	Hypoxia (10,000 ft simulated attitude) prevents changes in red cell mass and calcium metabolism associated with bed rest	Antagonistic
Bed rest and heat	Man	Tilt table tolerance	Heat (95 deg C) and 48 hr of bed rest produced greater orthostatic intolerance in combination than alone	Additive
Bed rest and water immersion (sequential)	Man	Tilt table tolerance	Not defined. Subjects at bed rest at night and immersed by day to simulate deconditioning effects of prolonged weightlessness	Not defined
Bed rest/ immersion and acceleration	Man	Tolerance to $+G_x$, $+G_z$ acceleration	Tolerance to $+G_z$ slow onset acceleration is reduced by prior bed rest or immersion exposure	Not defined
Immersion and acceleration (sequential)	Man	Tolerance to $+G_z$ accelera-tion	$+G_z$ tolerance reduced in one subject after 5 days of water immersion	Not defined

Reference: 92, Table 19-5

MSIS-42

Figure 5.9.2-6. Combined Stress–Simulated Weightlessness the Primary Stressor

Stresses	Test Animal	Measures	Effect	Physiological interaction
Cold and acceleration			See Figure 5.9.2-2	
Cold and hypoxia			See Figure 5.9.2-19	
Cold and ionizing radiation	Rats	Survival time	Both neutron (220 rad) and X-ray (430 rad) decrease survival time of rates at -20 deg C	Not defined
Cold and ionizing radiation	Rats	Survival time, lesions	The reduced longevity, retarded growth, cataracts, and skin ulcers seen after 500R X irradiation is not altered by 3-hr daily exposure to 32 deg F (0 deg C)	None
Cold and alcohol	Man	Skin and rectal temperature, heat production	Alcohol does not significantly alter thermal responses to 8 hr sleep in cold (20 deg C)	Not examined
Cold and hypoxia	Mice	Survival time	Survival time in 100% O_2 normally > 120 hr is reduced to < 72 hr in cold (4 deg C)	Not examined

Reference: 92, Table 19-6

MSIS-43

Figure 5.9.2-7. Combined Stress–Cold Temperature the Primary Stressor

Stresses	Test animal	Measures	Effect	Physiological interaction
Heat and acceleration	Man, mice	Tolerance, survival	See Figure 5.9.2-2	
Heat and hypoxia	Man	----	See Figure 5.9.2-9	
Heat and vibration	Man, primate	Sleep EEG	Combination of heat (90 deg F) and sinusoidal vibration reduces amount of REM sleep	Not defined
Heat and vibration			See Figure 5.9.2-3	Additive
Heat and noise	Man	Performance (tracking and monitoring), heart and respiration rates, body and skin temperature	Temperatures as high as 110 deg F (50% RH) and noise (110 dB) produce no significant degradation in performance or physiological thermal equilibrium	None
Heat and radiation	Dogs	Rectal temperature thyroid function	X irradiated (270–1800R) dogs are unable to maintain thermal balance during 6 hr exposure to (105 deg F) heat	Not identified
Heat and microwave radiation	Dogs	Rectal temperature	Dogs surviving the lethal effects of X irradiation were less able to tolerate the thermal effects of microwaves	Not identified
Heat and hypoxia	Mice	Survival time, histopathology	Survival time in 100% O_2 normally > 120 hr was reduced to < 72 hr in heat (34 deg C)	Not identified
Heat and vibration		Rectal temperature	Rectal temperature (T_R), rose in proportion to degree of heat stress. Vibration (up to 15G) lowered T_R. Combined stress interacted by synergism: T_R rose in proportion to degree of vibration stress	Synergistic

Reference: 92, Table 19-7

MSIS-44

Figure 5.9.2-8. Combined Stress–Heat the Primary Stressor

Stresses	Test animal	Measures	Effect	Physiological interaction
Hypoxia and heat and noise	Man	Performance (compensatory tracking), heart rate, respiration, rectal temperature	Heat (105 deg F), noise (110 dB white noise), and hypoxia (12,000 ft equiv.) studied in pairs or all three together show additive interactions	Additive
Hypoxia and cold	Man	Tolerance time, peripheral light loss	Rapid collapse and delayed recovery	Additive
Hypoxia and acceleration	Man	Tolerance time, peripheral light loss	Hypoxia decreases $+G_z$ tolerance	Additive
Hypoxia and heat	Man	Heart rate	Heat (149 deg C) and hypoxia ($PO_2$100 mm Hg) increase heart rate at 15" exposure 10 and 7 bpm respectively and 17 bpm when combined. No significant interaction is seen in other variables (skin and rectal temp., blood pressure, ventilation, and oxygen consumption). Initial synergistic interaction becomes antagonistic after 30 min.	Synergistic and antagonistic
Hypoxia and ionizing radiation	Rats	Tolerance (survival)	Prior whole body X irradiation improves survival rates for acute 25– to 30,000-ft altitude exposure	Antagonistic
Hypoxia and cold	Man	Shivering, heart rate, oxygen consumption	Hypoxia (10% inspired O_2) during cold (5 deg C) inhibits shivering and lowers heat production	Additive
Hypoxia and vibration	Rats	Mortality	Mortality of restrained rats increases directly with hypoxia (8– to 18,000-ft altitude) during $+G_x$ vibration (60 Hz 15G peak acceleration)	Additive
Hypoxia and alcohol	Man	Visual acuity, performance	Combined effect of hypoxia and alcohol greater than simple sum of the (decreased) acuity produced by each	Additive
Hypoxia and carbon monoxide	Man	Tolerance time	Small amounts of CO reduce tolerance to hypoxia	Additive
Hypoxia and hypobaria	Rat red cells	Osmotic fragility	Under constant pressure, hypoxia increases RBC osmotic fragility. Under constant PO_2, hypobaria increases osmotic fragility but hypoxia and hypobaria are independent and do not interact	None
Hypoxia and alcohol	Man	Psychomotor performance	Hypoxia and alcohol combined are additive	Additive
Hypoxia and alcohol	Man	Flicker fusion frequency	Hypoxia (altitude equivalent 10,000 ft) and the ingestion of alcohol each diminish flicker fusion frequency. The effect of the combined stresses is approximately the sum of the individual effects	Additive

Reference: 92, Table 19-8

MSIS-45

Figure 5.9.2-9. Combined Stress–Hypoxia the Primary Stressor

Stresses	Test animal	Measures	Effect	Physiological interaction
Ionizing radiation and acceleration	Rats, Mice	Survival, histopathology	Chronic acceleration improves radiation tolerance, acute acceleration degrades acceleration tolerance	Variable, complex
Ionizing radiation and decompression	Mice	Survival	No difference in acute survival of radiation when decompressed from air or oxygen environments. 30 d. survival less in oxygen breathing animals	None
Ionizing radiation and cold	Rats	Survival, tissue oxygen tension, histopathyology	Cold exposure (0°C) has no significant effect on radiation induced histopathology	None
Ionizing radiation and heat	Dogs	Rectal temperature	Both whole body and local thyroid irradiation (7 years prior to heat) produce measureable changes in thermoregulation response to heat stress	Not specified
Ionizing radiation and hypoxia	Rats	Survival, hematology	Hypoxia, both acute and chronic, is radioprotective	Antagonistic
Ionizing radiation and hypoxia	——	——	A large literature indicates the effects of radiation are enhanced by oxygen-rich atmospheres	Synergistic
Radiation (ionizing) and radiation (microwave)	Dogs	Survival, hematology	Mortality is greater after combined X-ray and microwave exposure than singly	Additive
Ionizing radiation and vibration	Mice	Histopathology	Damage to all nuclei chromozomes produced by both radiation and vibration, but interaction of the stresses is variable	Variable (probably no significant interaction)
Ionizing radiation and vibration and acceleration	Mice	Histopathology of bone marrow cell nuclei	Damage to cell nuclei and chromozones pattern by radiation is reduced by prior acceleration and vibration singly or on combination	Variable (depending on sequence of treatment)

Reference: 92, Table 19-9

Note:
Little comparison of results across studies is possible due to lack of uniformity of type radiation, dose units, types of response studied, type of animal, etc. No attempt is made in this table to specify the nature of the radiation exposure.

MSIS-46

Figure 5.9.2-10. Combined Stress–Ionizing Radiation the Primary Stressor

Table of Contents

		Page
6.0	**CREW SAFETY**	**6-1**
6.1	**INTRODUCTION**	**6-1**
6.2	**GENERAL SAFETY**	**6-1**
6.2.1	Introduction	6-1
6.2.2	General Safety Design Corsiderations	6-1
6.2.2.1	Safety Factors	6-1
6.2.2.2	Crew Induced Accidents	6-1
6.2.3	General Safety Design Requirements	6-2
6.3	**MECHANICAL HAZARDS**	**6-2**
6.3.1	Introduction	6-2
6.3.2	Mechanical Hazards Design Considerations	6-3
6.3.3	Mechanical Hazards Design Requirements	6-3
6.3.3.1	Corner and Edge Requirements	6-3
6.3.3.2	Exposed Corner Requirements	6-3
6.3.3.3	Protective Covers on Exposed Protrusions Requirements	6-3
6.3.3.4	Holes Requirements	6-3
6.3.3.5	Latches Requirements	6-3
6.3.3.6	Screws and Bolts Requirements	6-5
6.3.3.7	Securing Pins Requirements	6-5
6.3.3.8	Levers, Cranks, Hooks, and Controls Requirements	6-5
6.3.3.9	Burrs Requirements	6-5
6.3.3.10	Mechanically Stored Energy Requirements	6-5

6.3.3.11 Loose Equipment 6-6

6.3.4 Non-Exposed Edges and Corners 6-6

6.4 ELECTRICAL HAZARDS 6-6

6.4.1 Introduction 6-6

6.4.2 Electrical Hazards Design Considerations 6-7

6.4.2.1 Hazard Controls For Crew/Machine Interface 6-7

6.4.2.1.1 Hazard Control Selection 6-7

6.4.2.2 Hazard Classification-Psysiological Considerations 6-8

6.4.2.2.1 Catastrophic Hazard Classification 6-9

6.4.2.3 Bioinstrumentation 6-10

6.4.2.4 Leakage Current Verification 6-10

6.4.3 Electrical Hazards Design Requirements 6-10

6.4.3.1 Grounding 6-13

6.4.3.1.1 Hinged or Slide Mounted Panels and Doors Grounding 6-13

6.4.3.2 Electrical Bonding 6-14

6.4.3.3 Protective Covers 6-14

6.4.3.4 Interlocks 6-14

6.4.3.5 Warning Labels 6-14

6.4.3.6 Warning Labels Plus Recessed Connectors 6-14

6.4.3.7 Plugs and Receptacles 6-14

6.4.3.8 Insulation 6-14

6.4.3.9 Portable Equipment/Power Cords 6-14

6.4.3.10 Moisture Protection 6-15

6.4.3.11 Static Discharge Protection 6-15

6.4.3.12 Overload Protection 6-15

6.4.3.13 Batteries 6-15

6.4.3.13.1 Non-ORU Batteries 6-15

6.4.3.14 Mechanical Assembly 6-15

6.4.3.15 Switches/Controls 6-15

6.4.3.15.1 Power Switches/Controls 6-15

6.4.3.16 Power Driven Equipment Control Requirements 6-16

6.4.3.17 Ground Fault Circuit Interrupters (GFCI) 6-16

6.4.3.18 Leakage Current Design Requirements 6-16

6.4.3.18.1 Chassis Leakage Current 6-16

6.4.3.18.1.1 Chassis Leakage Current-Nonpatient Equipment 6-17

6.4.3.18.1.2 Chassis Leakage Current-Patient Care Equipment 6-17

6.4.3.18.2 Crewmember Applied Current 6-17

6.4.3.18.2.1 Leakage Current - Patient Care Equipment - Patient Connection Isolated 6-19

6.4.3.18.2.2 Leakage Current - Patient Care Equipment - Patient Connection - Ordinary 6-19

6.4.3.18.2.3 Health Maintenance System Instrumentation Grounding 6-19

6.4.3.18.2.4 Countermeasure System 6-19

6.4.3.18.2.5 Portable Medical Instrumentation 6-19

6.4.3.19 Bioinstrumentation System Microshock Protection 6-19

6.5 Touch Temperature 6-20

6.5.1 Introduction 6-20

6.5.2 Touch Temperature Design Considerations 6-20

6.5.3 Touch Temperature Design Requirements 6-21

6.6 FIRE PROTECTION AND CONTROL 6-21

6.6.1 Introduction 6-21

6.6.2 Fire Protection and Control Design Considerations 6-21

6.6.3 Fire Protection and Control Design Requirements 6-23

6.6.3 General Requirements 6-23

6.6.3.1.1 Fire Protection System 6-23

6.6.3.1.2 Material Selection 6-23

6.6.3.2 Detection Requirements 6-23

6.6.3.2.1 Detection System Signals 6-23

6.6.3.2.2 Reset and Self-test 6-23

6.6.3.2.3 Sensor Replacement 6-23

6.6.3.3 Warning System Requirements 6-23

6.6.3.4 Extinguishing Requirements 6-23

6.7 DECOMPRESSION HAZARDS 6-24

6.7.1 Hypoxia 6-24

6.7.2 Decompression Sickness 6-24

6.7.3 Gas expansion 6-24

6.7.4 Short Duration Exposure 6-24

6.7.5 Vaporization of Tissue Fluids 6-24

6.0 CREW SAFETY
{A}

6.1 INTRODUCTION
{A}

This section is not intended to be a comprehensive guide to manned spacecraft safety. It deals only with general safety considerations and requirements and a specialized subset of the total safety problem. This specialized subset addresses only the following topics: 1) mechanical hazards; 2) electrical hazards; 3) thermal hazards; and 4) fire hazards.

Other safety topics are covered in the topical sections on human performance (Section 4.0), natural and induced environments (Section 5.0), health management (Section 7.0), architecture (Section 8.0), workstations (Section 9.0), hardware and equipment (Section 11.0), maintainability (Section 12.0), and EVA (Section 14.0).

An exhaustive treatment of general system safety is given in AFSC Design Handbook 1-6 (Reference 21). The appendices of the Space Station Crew Safety Alternatives Study (Reference 42) provide an exhaustive treatment of crewmember safety requirements.

6.2 GENERAL SAFETY
{A}

6.2.1 Introduction
{A}

This section briefly describes some of the principles of system design and human behavior related to safety and provides general safety requirements.

6.2.2 General Safety Design Considerations
{A}

Two primary considerations in crew safety are prevention of the following:

a. System failures affecting the health/safety/survival of the crew.

b. Design-induced crew errors causing crew injury or damage to the system.

6.2.2.1 Safety Factors
{A}

Safety factors shall be given major consideration as a part of system design. Applying adequate factors of safety in the design of systems such as unpressurized and pressurized structural subsystems, assures systems will not fail under expected operating loads.

6.2.2.2 Crew Induced Accidents
{A}

The probability of occurrence of crew-induced accidents is directly related to some principles of human behavior that result in human errors that might be committed during operation and maintenance of equipment. Some of these human behavior principles are listed below as an aid to equipment designers (see references 15 and 21 for a more detailed discussion of these principles). These principles provide answers to why people make errors, misuse equipment, and make unsafe judgements.

a. Equipment design that exceeds the physical and psychological limits of human capability can create situations where the likelihood of accidents is high.

b. Any design that makes crewmembers work harder because of the physical requirements of the work situation is likely to promote fatigue and increase error.

c. When crewmembers must perform tasks in inadequate facilities or without proper information, errors are likely to occur.

d. When design results in tasks that are unpleasant or complex, crewmembers may not devote sufficient time and attention to attain satisfactory performance.

e. Crewmembers are less likely to perform tasks as frequently if they are aware the task is hazardous.

f. If equipment is insufficient or inadequate, crewmembers will modify it, or improvise, so they can get the job done.

g. Procedures should be definitive, comprehensive, and as accurate as possible.

h. Equipment must be designed so that it encourages safe use, allowing a minimum opportunity for the crewmembers to be exposed to hazards.

i. If the equipment is designed so that it does not operate in accordance with the crewmember's expectancies, he will eventually make an error.

j. If hazards are designed into the equipment, warning notes in the technical manual, or warning labels on the equipment, special instructions and special training will reduce, but may not completely eliminate the possibility of human error.

In summary, the designer should remember that most safety problems are the result of the equipment not being designed properly and/or people using it improperly. The designer must, therefore, anticipate how equipment might be misused and design it so that misuse is less likely and error effects are not catastrophic.

6.2.3 General Safety Design Requirements

{A}

The following general minimum safety requirements shall apply:

a. General Safety Design - Design shall reflect applicable system and personnel safety factors, including minimization of potential human error in the operation and maintenance of the system.

b. Fail-Safe Design - A failure tolerant design shall be provided in areas where failure can disable the system or cause a catastrophe by damaging equipment, injuring crewmembers, or causing critical equipment to be operated at undesirable times.

c. Elimination or Minimization of Hazards - Design actions to eliminate or minimize a hazard shall be conducted in the following order of precedence. This hazard reduction sequence shall apply to all nominal and contingency (e.g., planned maintenance or repair) equipment operations.

1. Design - Elimination of hazards by removal of hazardous sources and operations by appropriate design measures.

2. Safety Devices - Prevention of hazards through the use of safety devices or features.

3. Warning Systems - Control of hazards through the use of warning devices.

4. Special Procedures - Control of hazards through the use of special procedures.

6.3 MECHANICAL HAZARDS

{A}

6.3.1 Introduction

{A}

This section provides the design considerations and design requirements for designing IVA hardware to avoid safety problems with burrs, edges, corners and protrusions.

(Refer to Paragraph 14.1.3, EVA Safety Design Requirements, for related EVA requirements.)

6.3.2 Mechanical Hazards Design Considerations

{A}

Sharp surfaces or protrusions include surfaces, edges, crevices, points, burrs, wire ends, screw heads, corners, brackets, rivets, braided cable, cable fittings, cable strands, clamps, pins, latches, lap joints, bolt ends, lock nuts, etc., which, if contacted, could injure crewmembers or damage equipment by entrapment, cutting, sawing, abrading, snagging, tearing or puncturing.

These hazards will be avoided if the above equipment is mounted/installed so that it does not interfere with crewmember movement in habitable areas, transfer corridors and tunnels, hatchways, or external surfaces of equipment within the habitable space. Items that must be grasped by the bare hands, or that could puncture a space suit, must be free from hazards.

(Comply with Surface Finish Requirements found in ANSI/ASME/B46.1-1985.)

6.3.3 Mechanical Hazards Design Requirements

{A}

Design requirements for the elimination of burrs, corners, edges, protrusions, pinching, snagging, and cutting for IVA are given in this section:

(Refer to Paragraph 14.1.3, EVA Safety Requirements, for comparable EVA requirements.)

6.3.3.1 Corner and Edge Requirements

{A}

a. Edges with which the crew can come in contact, 6.4 mm (0.25 in.) thick or greater shall be rounded to a minimum radius of 3.0 mm (0.12 in.) as shown in Figure 6.3.3.1-1.

b. Edges with which the crew can come in contact, 3.0 to 6.4 mm (0.12 to 0.25 in.) thick shall be rounded to a minimum radius of 1.5 mm (0.06 in.) as shown in Figure 6.3.3.1-2.

c. Edges with which the crew can come in contact, 0.6 to 3.0 mm (0.02 to 0.12 in.) thick shall be rounded to a full radius as shown in Figure 6.3.3.1-3.

d. The edges of thin sheets less than 0.5 mm (0.02 in.) thick shall be rolled or curled as shown in Figure 6.3.3.1-4.

6.3.3.2 Exposed Corner Requirements

{A}

a. Exposed corners of materials less than 25 mm (1.0 in.) thick shall be rounded to a minimum radius of 13 mm (0.5 in.), as shown in Figure 6.3.3.2-1.

b. Exposed corners of materials which exceed 25 mm (1.0 in.) thickness shall be rounded to 13 mm (0.5 in.) spherical radius, as shown in Figure 6.3.3.2-2.

6.3.3.3 Protective Covers on Exposed Protrusions Requirements

{A}

Equipment which cannot meet corner and edge requirements of 6.3.3.1 and 6.3.3.2 shall be covered or shielded when not in use.

6.3.3.4 Holes Requirements

{A}

Holes that are round or slotted in the range of 10.0 to 25.0 mm (0.4 to 1.0 in) shall be covered.

6.3.3.5 Latches Requirements

{A}

Latches which pivot, retract, or flex such that a gap of less than 25 mm (1.4 in.) exists shall be designed to prevent entrapment of crewmember appendages.

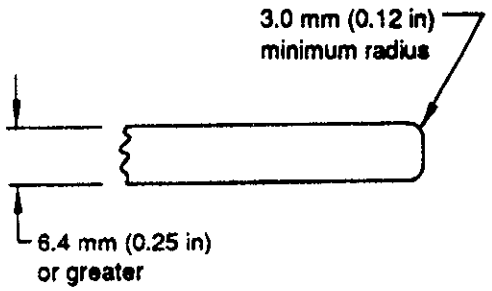

MSIS 4
Rev. A

Reference: 1, Figure 3.5-1, page 3.5-10
155, page 6-31

Figure 6.3.3.1-1 Requirements for Rounding Exposed Edges 6.4 mm (0.25 in) Thick or Thicker

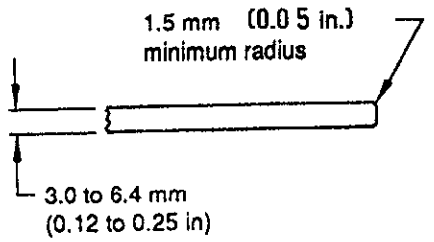

MSIS 5
Rev. A

Reference: 1, Figure 3.5-2, page 3.5-11
155, page 6-31

Figure 6.3.3.1-2 Requirements for Rounding Exposed Edges 3.0 to 6.4 mm (0.12 to 0.25 in) Thick

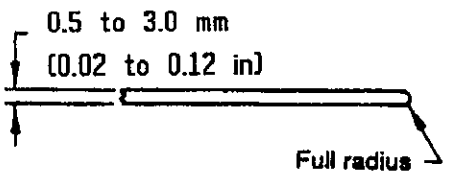

MSIS 6
Rev. A

Reference: 1, Figure 3.5-3, page 3.5-11
155, page 6-31
With Updates

Figure 6.3.3.1-3 Requirements for Rounding Exposed Edges 0.5 to 3.0mm (0.02 to 0.12 in.) Thick

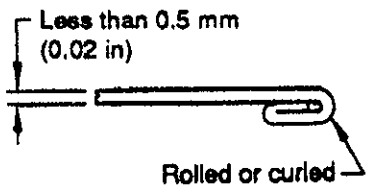

MSIS 7
Rev. A

Reference: 1, Figure 3.5-4, page 3.5-11
155, page 6-31
With Updates

Figure 6.3.3.1.-4 Requirements for Curling of Sheets Less Than 0.5mm (0.02in.) Thick

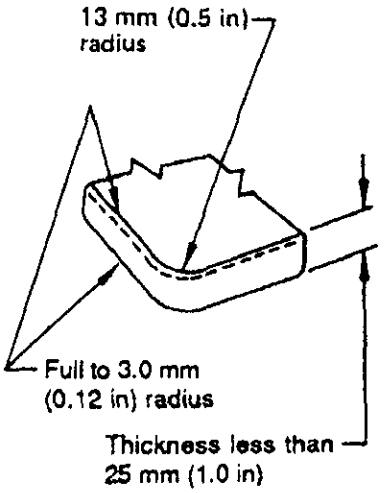

MSIS 8
Rev. A

Reference: 1, Figure 3.5-5, page 3.5-11
155, page 6-32

Figure 6.3.3.2-1. Requirements for Rounding of Corners Less Than 25 mm (1.0 in) Thick

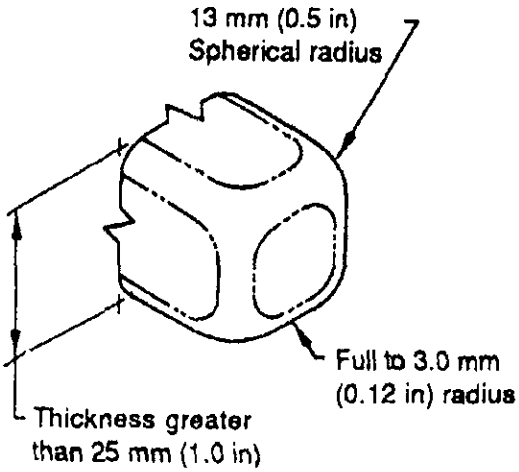

MSIS 9
Rev. A

Reference: 1, Figure 3.5-6, page 3.5-11
155, page 6-32

Figure 6.3.3.2-2. Requirements For Rounding of Corners Greater Than 25 mm (1.0 in) Thick

6.3.3.6 Screws and Bolts Requirements

{A}

Screws or bolts with more than two exposed threads shall be capped to protect against the sharp threads.

6.3.3.7 Securing Pins Requirements

{A}

Securing pins in handrails shall be designed to prevent their inadvertently backing out above the handhold surface.

6.3.3.8 Levers, Cranks, Hooks, and Controls Requirements

{A}

Levers, cranks, hooks, and controls shall not be located where they can pinch, snag, or cut the crewmember or clothing.

6.3.3.9 Burrs Requirements

{A}

Exposed surfaces shall be free of burrs.

6.3.3.10 Mechanically Stored Energy Requirements

{A}

Mechanical devices capable of storing energy (such as springs, levers, and torsion bars) shall be avoided in spacecraft design. Bungee cords are acceptable.

a. Safety Features - Where stored energy devices are necessary, safety features such as removal tabs, locks, protective devices, and warning placards shall be provided.

b. Stored Energy Release - Spring-loaded devices (i.e., bungee restraints) shall provide means for releasing stored energy forces.

c. Backlash - Stored energy devices shall not generate a backlash.

d. Locking Wires - Refer to 11.9.3.2 h and 11.9.3.3.i.

6.3.3.11 Loose Equipment

{A}

See Figure 6.3.3.11-1 for data regarding loose equipment edge and corner radiusing requirements.

6.3.4 Non-Exposed Edges and Corners

{A}

All edges and corners of hardware exposed to crew contact during maintenance or servicing shall be rounded to a minimum radius of 0.003 inch.

6.4 ELECTRICAL HAZARDS

{A}

6.4.1 Introduction

{A}

This section contains the design considerations and design requirements for protection of crewmembers from electrical hazards. This section does not include considerations or requirements that pertain to protection of hardware from electrical hazards.

Mass (Kg)	Edge radius (mm)	Corner radius (mm)
0.0 to 0.25	0.3	0.5
0.25 to 0.5	0.8	1.5
0.5 to 3.0	1.5	3.5
3.0 to 15.0	3.5	7.0
15.0 to 50.0	3.5	13.0

Mass (lb)	Edge radius (in)	Corner radius (in)
0.0 to 0.5	0.01	0.02
0.5 to 1.1	0.03	0.06
1.1 to 6.6	0.06	0.14
6.6 to 33.0	0.14	0.3
33.0 to 110.0	0.14	0.5

MSIS 410
Rev. A

Reference: 381

Figure 6.3.3.11-1 Loose Equipment Edge and Corner Radiusing Requirements

6.4.2 Electrical Hazards Design Considerations

{A}

Controls must be in place such that no single failure can allow a critical hazardous event (e.g., nondisabling injury to personnel), and no two failures can allow a catastrophic hazardous event (e.g., disabling or permanent injury to personnel). Implied is that two failures can allow a critical hazardous event to occur.

For electrical hazards, a crew/machine interface critical hazardous event is an event which can subject the crew to an electric shock.

If, however, the failure can result in a hazardous event causing other than a nondisabling injury (e.g., inability to let go of the electrically energized surface, stoppage of breathing, ventricular fibrillation of the heart, electric burns, or paralysis), the hazard is classified as catastrophic.

6.4.2.1 Hazard Controls For Crew/Machine Interface

{A}

The design should consider the effects of a worst case, credible, hazardous scenario including the highest internal voltage applied to or generated within the equipment under analysis. The scenario should take into account the potential for a "smart" short to an accessible conductive surface (or a surface likely to become electrically energized upon encountering a fault) such that the fault current supplied to the conductive surface is internally limited to be below the trip point of the overcurrent protector. It also should take into account the worst case physiological effect of frequency and wave form associated with the "smart" short.

Once the worst case scenario is identified, an electrical shock hazard classification of critical versus catastrophic is made and appropriate controls are utilized. If the classification is marginal or unclear, a conservative position is taken with the hazard classified as catastrophic until proven otherwise. Avionics equipped with three electrical shock hazard controls need only be assessed for the independence of these controls.

6.4.2.1.1 Hazard Control Selection

{A}

Hazard controls for electric shock at the crew/machine interface must be independent controls (i.e., no single equipment failure or event can eliminate a control, and no single control failure, event, or environment can eliminate more than one control).

Typical methods of implementing these hazard controls include the use of:

1. safety (green) wire.

2. bonding,

3. insulation around electrically energized surfaces and conductive surfaces likely to become electrically energized upon experiencing a fault within the equipment,

4. barriers to electrically energized surfaces and conductive surfaces likely to become electrically energized upon experiencing a fault within the equipment, and

5. a ground fault interrupter (i.e., a device through which power is applied to the equipment wherein the device continuously monitors the difference between the current applied power applied upon detecting a difference in current beyond a preset threshold, the difference in current presumed to have been undesirably returned through ground).

As long as controls remain independent, two similar methods of hazard control may be utilized. For example, double insulation in which an insulation system comprised of basic insulation and supplementary insulation with the two insulations physically separated and so arranged that they are not subjected to the same deteriorating influences (i.e., failure, event , or environment) could represent two controls.

It should be noted that terrestrially, three(3) controls are frequently used. For example, hair blowers are typically fabricated with double insulated enclosures and derive power through fixed ground fault interrupters; many power tools are double insulated and frequently derive power through fixed or portable ground fault interrupters; and many power tools are double insulated, have a safety (green) wire, and frequently derive power through fixed or portable ground fault interrupters (4 controls).

6.4.2.2 Hazard Classification - Physiological Considerations

{A}

In order to classify a hazard as critical versus catastrophic, the physiological effects of electric current must be known. Included within these effects is the body impedance which appears to change non-linearly with varying voltages. In addition, a physiological effect of current through the skin is that the hands will not remain dry; skin will perspire at the point of contact with an electrically energized surface. Test reports form several independent investigators indicate that minute cuts or punctures that may be difficult to visually locate can greatly reduce the resistance of the skin by acting as "short circuits" through the skin. Therefore, conservative analysis should assume that the body contact areas are wet (i.e., skin resistance is negligible).

Most of the internal body resistance is attributed to the joints (wrist: 250 ohms; elbow: 150 ohms; shoulder: 100 ohms; knee: 100 ohms; ankle: 250 ohms; neck: 50 ohms; torso length: 100 ohms). Also reported is that people with long body parts appear to have higher body impedance than those with shorter body parts, and people with strong musculature generally have less body impedance than those who have weak musculature. Figure 6.4.2.2-1 shows the approximate value of internal body resistance with contact through the torso with different parts of the body.

	HAND	ARM	TORSO	LEG	FOOT
HAND	1000	700	600	750	1100
ARM	700	400	300	450	800
TORSO	600	300	100	250	600
LEG	750	450	250	300	650
FOOT	1100	800	600	650	1000

MSIS.507 Rev. B

Reference: 403

Figure 6.4.2.2-1 Internal Body Resistance, OHMS

6.4.2.2.1 Catastrophic Hazard Classification

{A}

The injurious physiological effects of the passage of electric current through the human body include the inability to let go of the electrically energized surface, stoppage of breathing, ventricular fibrillation of the heart, electric burns, and paralysis. The stoppage of breathing and paralysis are not the critical physiological effects if the limits for let-go and ventricular fibrillation, is totally disabling, and, if allowed to continue, can result in a fatal injury, let-go is the current threshold used to classify hazards as catastrophic.

The let-go current threshold is the current above which a person will be unable to release his/her grip on the electrically energized surface because of involuntary muscle contractions. The threshold current for let-go is affected by the physical characteristics of the body, and the frequency and wave shape of the current.

The 99.5 percentile rank recommended limits for direct current are 60 milliamperes (mA) for a man, 40 mA for a woman, and 30 mA for a child. For sinusoidal current at power line frequencies, the recommended limits are 9 mA root-mean-square (rms) for a man, 6 mA rms for a woman, and 4.5 mA rms for a child. Complex wave forms significantly decrease these recommended limits. As the frequency of the current is increased, the recommended current is increased.

If the exposure is expected to be limited to adults, the recommended limits for a woman is used. If the exposure might include children, the recommended limits for a child is used.

For many nonsinusoidal waveforms, the parameter of the current that is used for establishing limits is the peak value of the waveform instead of the rms value or the average of the rectified waveform. For waveforms consisting of both alternating current and direct current components, the recommended limit becomes more complex, and as either component approaches zero, the limit of the other component approaches the limit of the component alone.

In addition to using the let-go current threshold as a means of determining the number of hazard controls required to control the identified hazard, it is also used in the design of hazard controls that are current sensitive.

As an illustration, assume that a ground fault interrupter was designed to trip in 25 milliseconds with a 60 mA direct current trip threshold. Assume that the current conducted through the crewperson as the result of the open safety (green) wire was 58 mA direct current . The ground fault interrupter would not trip since the current was below its threshold. If the crewperson was a man, he would probably be able to let go, but if the crew person was a woman, there is a significant risk ($p \sim 75\%$) that she would not be able to let go, and barring intervention by another crewperson, might be in serious jeopardy.

Clearly, this ground fault interrupter should be designed to trip on a current threshold as low as possible without introducing false tripping due to leakage currents or transients. In addition, the selection of let-go current threshold must take into account the power frequency, frequencies superimposed on the power form the power system itself, and frequencies that might be superimposed on the power system form the load attached to the ground fault interrupter both normally and as the result of a fault.

System response time, including the period from detection through power removal, must be evaluated so as to ensure rapid power removal (perhaps, within 25 milliseconds) upon encountering the fault current which might be exceeding the let-go threshold. Even at a level slightly above the let-go threshold, the crewperson is at risk for prolonged exposure.

Figure 6.4.2.2.1-1 is a compiled chart of let-go current thresholds and includes the results of composite waveform test. Figure 6.4.2.2.1-2 graphically describes the composite waveforms.

6.4.2.3 Bioinstrumentation

{A}

Bioinstrumentation should be designed to consider the interactions among several bioinstruments when multiple equipments are simultaneously connected to the same crewperson.

For invasive bioinstrumentation, the design should consider the effects of fluids contacting energized electrical surfaces (e.g., blood or saline leakage to an intravenous pressure transducer). It has been demonstrated that a current gradient, precipitated particles, and gas bubbles can be rapidly generated within the fluid when the fluid is exposed to voltages (i.e., test used just 5 volts direct current). The concern with the particles and gas bubbles is the possibility of migration to the crewmember's circulatory system, and the concern with the current gradient is the possibility of inducing ventricular fibrillation.

6.4.2.4 Leakage Current Verification

{A}

Hazard analysis for avionics which exhibit leakage currents below the threshold of perception may consider leakage current design control as an electrical hazard control for critical hazards.

The physiological response to the perception of current is frequency sensitive. A relatively precise method of verifying that leakage currents are below the threshold of perception entails the use of spectrum analysis to determine the root-mean-square (rms) current for each frequency component of the leakage current. An analysis is then performed to assure that these components are below the threshold of perception individually and in combination.

An alternate technique utilizes a simple, "GO/NO-GO" method to verify the leakage current levels. Utilizing a true rms voltmeter in conjunction with a resistor/capacitor network which synthesizes the human threshold of perception characteristics, the analysis reduces to determining if the total avionic's leakage current as evidenced by the true rms voltmeter indication exceeds the maximum permissible level.

6.4.3 Electrical Hazards Design Requirements

{A}

Equipment design shall protect the crewmembers from electrical hazards.

In designing to minimize electrical shock hazards, controls shall be incorporated such that if the worst case credible failure can result in a crewmember exposure that:

a. is below the threshold for shock (i.e., below maximum leakage current and voltage requirements as defined within this Section), no control shall be required;

b. exceeds the threshold for shock and is below the threshold of let-go (critical hazard) as defined in Figure 6.4.3-1, two independent controls (e.g., a safety green) wire, bonding, insulation, leakage current levels below maximum requirements (shall be required such that no single failure, event, or environment can eliminate more than one control.; or, c. exceeds the threshold of let-go (catastrophic hazardous event), three independent controls shall be required.

If two independent controls are provided the, physiological electrical shock effect of the combination of the highest internal voltage applied to or generated within the equipment and the frequency and wave form associated with a worst case credible failure that can be applied to the crewmember shall be below that threshold of let-go.

LET-GO CURRENTS (mA) (99.5 Percentile Rank)						
WAVE FORM	MEN			WOMEN		
	AC (rms)	DC	AC crest (Im)	AC (rms)	DC	AC crest (Im)
DC		60.0			40.0	
Sinusoid: 5 Hz	14.5			9.6		
10 Hz	9.8			6.5		
15-70 Hz	9.0			6.0		
180 Hz	10.4			6.9		
500 Hz	11.0			7.3		
1 kHz	13.7			9.1		
2.5 kHz	20.0			13.3		
5 kHz	29.3			19.5		
10 kHz	55.3			36.9		
COMPLEX[3] (60 Hz sine with DC): Sine		0	12.7		0	8.4
25% offset		15.5	3.9		10.2	2.6
50% offset		10.9	5.4		7.2	3.6
141% offset		5.8	8.2		3.8	5.4
Rectified : Half wave		3.9	8.2		2.5	5.5
Full wave		9.8	5.6		6.5	3.7

Reference: 403

NOTES:

1. For adults, let-go current limits are those shown for women.
2. If children might be exposed to the hazard, let-go current limits are 1/2 those shown for men.
3. Refer to Figure 6.4.2.2.1-2 for graphical descriptions.

Figure 6.4.2.2.1-1 Let-Go Current Thresholds

MSIS504 Rev. B

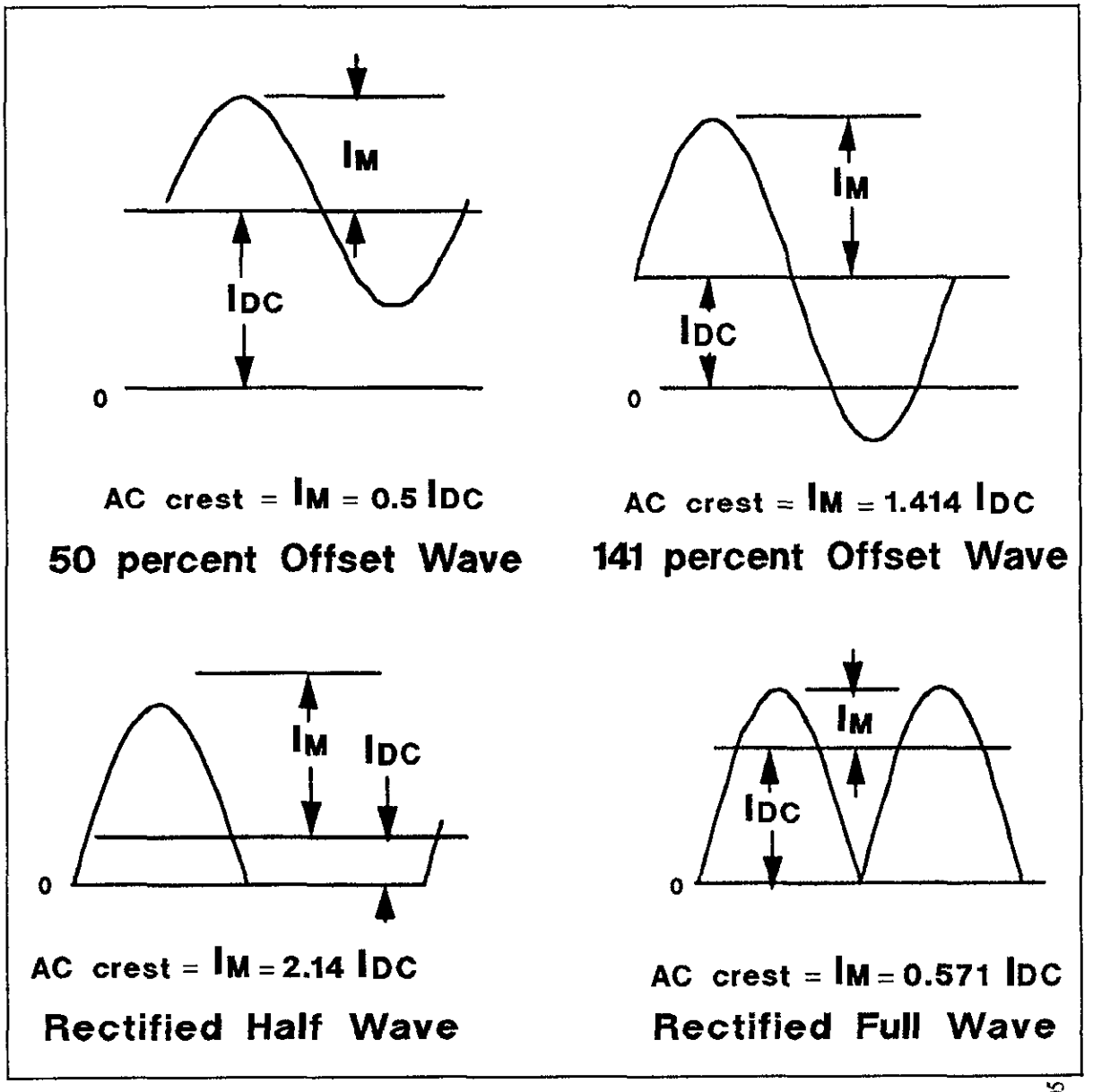

Reference: 403

MSIS505 Rev. B

Figure 6.4.2.2.1-2 Complex Waveforms With DC Components

(Based on 99.5 Percentile Rank of Adults)

Frequency (Hertz)	Max Total Peak Current (ac + dc components combined) milliamperes
DC	40.0
15	8.5
2000	8.5
3000	13.5
4000	15.0
5000	16.5
6000	17.9
7000	19.4
8000	20.9
9000	22.5
>10000	24.3

MSIS506 Rev. B

Reference: 404

Figure 6.4.3-1 Let-Go Current Profile, Threshold Versus Frequency

Non-patient equipment with internal voltages not exceeding 30 volts rms (root-mean-squared) shall be considered as containing potentials below the threshold for electrical shock.

If the classification of the hazard is marginal or unclear, three independent hazard controls shall be required.

6.4.3.1 Grounding

{A}

All electrical powered equipment external, non-isolated metal parts subject to user contact shall be at ground potential. A permanent bonding means shall be provided to facilitate the connection of metal parts to ground prior to the connection of any electrical signals or power. A permanent bonding means shall be provided to facilitate the removal of all electrical signals and power prior to the removal of metal parts from ground.

Grounding conductors internal to an ORU shall be secured internally to the ORU's metal enclosure by means of a fastening technique unlikely to be removed during any servicing operation. Solder alone shall not be used for securing the grounding conductor.

Each grounding or bonding means shall be capable of conducting the maximum ground fault current amplitude and duration which might occur as the result of discharges (static, plasma, etc.), induced RF voltages, internal power-faulted equipment and accidental short circuits.

All grounding shall conform to the vehicle's grounding requirements.

6.4.3.1.1 Hinged or Slide Mounted Panels and Doors Grounding

{A}

Hinges or slides shall not be used for grounding paths. A ground shall be considered satisfactory if the electrical connection between the

conductive door or panel, in both the open and closed position, and the equipment tie point exhibits a resistance of less than 0.1 ohms and has sufficient ampacity to insure the reliable and immediate tripping of associated equipment overcurrent protection devices.

6.4.3.2 Electrical Bonding

{A}

On-orbit electrical bonding shall meet the vehicle's requirements for electrical bonding to prevent damage to the vehicle or injury to crewmembers due to discharges (static, plasma, etc.), induced RF voltages, internal power-faulted equipment, and accidental short circuits. Each independent bonding path is considered a hazard control for electrical shock.

6.4.3.3 Protective Covers

{A}

Equipment shall provide grounded or nonconductive protective covering for all electrical hardware. These coverings shall protect against inadvertent contact from foreign object entering electrical junctions, and moisture accumulation.

6.4.3.4 Interlocks

{A}

Equipment access doors or covers shall incorporate interlocks to remove all potentials in excess of 150 V when open.

6.4.3.5 Warning Labels

{A}

Warning labels shall be provided where inadvertent contact with electrical potentials are hazardous to crewmembers. Warning labels shall comply with the requirements in Section 9.5.3 Labeling and Coding Design Requirements

6.4.3.6 Warning Labels Plus Recessed Connectors

{A}

Provide warning labels and recessed connectors or other protective measures where potentials exceed 150 V.

6.4.3.7 Plugs and Receptacles

{A}

Plugs and receptacles shall meet the requirements of Section 11.10 Connectors. In addition:

a. Plugs and receptacles (connectors) shall be selected and applied such that they cannot be mismated or cross-connected in the intended system as well as adjacent systems. Although required, the use of identification alone is not sufficient.

b. Connectors shall be selected and applied such that they have sufficient mechanical protection to mitigate inadvertent crewmember contact with exposed electrical contacts.

c. Connectors shall be specifically designed and approved for mating and demating in the existing environment under the loads being carried, or connectors shall not be mated or demated until voltages have been removed (dead-faced) from the powered side(s) of the connectors.

6.4.3.8 Insulation

{A}

All materials shall meet the vehicle's requirements for materials and processes. In addition:

a. All exposed electrical conductors and terminations shall be insulated.

b. The crew shall be protected from electrical hazards when utilizing tools within 24 inches of exposed electrical potentials.

6.4.3.9 Portable Equipment/Power Cords

{A}

A ground fault circuit interrupter (GFCI) used in conjunction with a portable equipment shall be considered as one hazard control. Non-battery powered portable equipment shall incorporate a three-wire power cord with one wire at ground potential. A system of double insulation or its equivalent, when approved by the procuring agency, may be used without a ground wire.

6.4.3.10 Moisture Protection

{A}

Equipment shall be designed so that moisture collection will not present a safety hazard to the crew.

6.4.3.11 Static Discharge Protection

{A}

Equipment shall be designed so that the crewmembers are protected from static charge buildup.

6.4.3.12 Overload Protection

{A}

a. The functioning of an overload protective device shall not result in a fire, electric shock, or crewmember injury.

b. An overload protective device shall not be accessible without opening a door or cover. Exception: The operating handle or operating button of a circuit breaker, the cap of an extractor-type fuseholder, and similar parts may project outside the enclosure.

c. The arrangement of extractor-type fuseholders shall be such that no energized parts are exposed at any time during fuse replacement.

d. Overload protection (fuses and circuit breakers) intended to be manually replaced or physically reset on-orbit shall be located where they can be seen and replaced or reset.

e. Each overload protector (fuses and circuit breakers) intended to be manually replaced or physically reset on-orbit shall be readily identified or keyed for its proper value.

f. Overload protection shall be designed and rated for on-orbit use including the maximum environmental range expected as the result of contingencies.

6.4.3.13 Batteries

{A}

Unless intentionally designed for the purpose, batteries shall not be connected to or disconnected form a current drawing load. Batteries and their utilization will conform to the requirements of JSC 20793, Manned Space Vehicle Battery Safety Handbook, and JPL 86-14, The NASA Aerospace Battery Safety Handbook.

Batteries/battery packs with potentials above 30 volts dc (direct current) shall provide hazard controls as specified in Section 6.4.3.

6.4.3.13.1 Non-ORU Batteries

{A}

Non-ORU batteries shall be disconnectable and removable without special equipment. Mounting provisions shall ensure retention for all service conditions. Polarity of the battery terminals shall be prominently marked or battery terminal connections shall be polarized to mitigate erroneous installation.

6.4.3.14 Mechanical Assembly

{A}

A switch, fuseholder, lampholder, attachment plug receptacle, or other energized component that is handled by a crewmember shall be mechanically held (not relying on friction alone) to prevent turning in its mounting panel.

The mounting of components to a printed wiring board and the mounting of the printed wiring board itself shall be such that any forces that might be exerted on the components or board will not displace the components or deflect the board so as to produce an electric shock or fire.

6.4.3.15 Switches/Controls

{A}

Switches/controls shall be designed such as to prevent unplanned hazardous manual or automatic operation. Switches/controls which provide automatic starting after an overload initiated shutdown shall not be employed.

6.4.3.15.1 Power Switches/Controls

{A}

Switches/controls performing ON/OFF power functions shall open or dead-face all supply circuit conductors except the power return and the equipment grounding conductor while in the power OFF position.

Power OFF markings and/or indications shall only be used if all parts, with the exception of overcurrent devices and associated EMI filters, are disconnected from the supply circuit. STANDBY, CHARGING, or other appropriate nomenclature shall be used to indicate that the supply circuit is no t completely disconnected for this power condition.

6.4.3.16 Power Driven Equipment Control Requirements

{A}

If a risk of injury to a crewmember or damage to equipment can result from the motion of power driven equipment:

a. the controls for that mechanism shall be of a reversible type and shall not continue operation of the moving part in the same direction when a switch readily accessible to that crewmember is activated to initiate operation in the other direction, or

b. the power driven equipment shall be mechanically constructed such that the injurous forces are immediately removed by activation of a switch readily accessible to that crewember.

6.4.3.17 Ground Fault Circuit Interrupters (GFCI)

{A}

A non-portable utility outlet intended to supply power to portable equipment shall include a GFCI, as an electrical hazard control, in the power path to the portable equipment. GFCI trip current detection shall be independent of the portable equipment's safety (green) wire.

GFCI will be designed to trip below the threshold of let-go based upon the 99.5 percentile rank of adults. Non-portable utility outlets supplying power to portable equipment shall include a GFCI with trip point characteristics such that tripping will not exceed the currents specified in the profile shown in Figure 6.4.3-1.

Ground fault circuit interrupters that depend upon the analysis of current shall remove power within 25 milliseconds upon encountering the fault current.

GFCI shall provide an on-orbit method for testing trip current detection threshold at a frequency within the maximum human sensitivity range of 15 to 70 Hertz.

6.4.3.18 Leakage Current Design Requirements

{A}

Non-patient equipment with internal voltages not exceeding 30 volts rms (root-mean-squared) and non-patient equipment incorporating three independent hazard controls (excluding non-patient equipment incorporating leakage current as a control) shall not be required to verify leakage current design requirements.

For designs using leakage current as a control, verification of leakage current design requirements shall be accomplished suing the network shown in Figure 6.4.3.18-1. The leakage current (milliamperes) shall be computed as the voltage (volts) measured across the network in series with the grounding conductor (for chassis leakage current), or in series with the crewmember connection lead (for ordinary patient connection leakage current), divided by 1000. For isolated patient connection lead leakage current, a non-inductive, 1000 ohm resistor shall replace the network shown in Figure 6.4.3.18-1 for this measurement.

6.4.3.18.1 Chassis Leakage Current

{A}

Crewmembers shall not be exposed to excessive levels of leakage current form direct or indirect contact with electrically powered equipment. Equipment qualification shall include verification of acceptable chassis leakage currents as defined within Section 6.4.3.18. Leakage current test procedures for DC powered equipment shall not include reversed polarity input power tests.

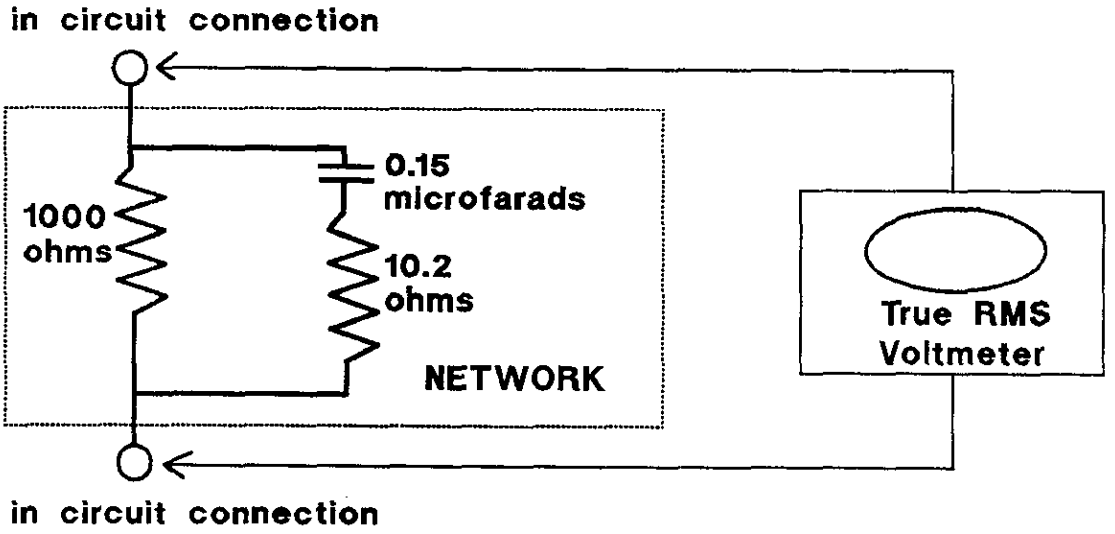

Reference: 394

Notes:

1. Resistors are non-inductive.
2. Voltmeter is a true RMS (root-mean-squared) type with frequency bandwidth appropriate for the frequencies of the voltages being measured. Voltmeter frequency bandwidth may be limited to 20 megaHertz (MHz) for equipment-under-test frequencies above 20 MHz.

Figure 6.4.3.18-1 Leakage Current Verification Network

MSIS503 Rev. B

6.4.3.18.1.1 Chassis Leakage Current - Nonpatient Equipment

{A}

The chassis leakage currents for nonpatient equipment shall not exceed the values shown in Figure 6.4.3.18.1.1-1. Leakage current shall not exceed 0.700 milliamperes (ma) DC for grounded nonpatient Equipment, and leakage current shall not exceed 0.350 ma DC for double insulated nonpatient Equipment.

6.4.3.18.1.2 Chassis Leakage Current - Patient Care Equipment

{A}

The chassis leakage currents for patient care equipment shall not exceed the values shown in Figure 6.4.3.18.1.2-1. Leakage current shall not exceed 0.140 ma DC for grounded patient care Equipment, and leakage current shall not exceed 0.070 ma DC for double-insulated patient care Equipment.

6.4.3.18.2 Crewmember Applied Current

{A}

Crewmembers shall not be exposed to excessive levels of leakage current from direct or indirect contact with electrically powered equipment. Equipment qualification shall include verification of acceptable patient connection leakage currents as defined within Section 6.4.3.18. Leakage current test procedures for DC powered equipment shall not include reversed polarity input power test.

The leakage currents for patient care equipment as seen from the patient end of cables or terminals shall not exceed the values shown in Figure 6.4.3.18.1.2-1.

Leakage currents shall be tested:

a. lead to ground

ENCLOSURE OR CHASSIS			
GROUNDED		DOUBLE INSULATED	
DC ma	AC ma RMS	DC ma	AC ma RMS
0.700	0.500	0.350	0.250

MSIS 502 Rev. B

Reference: 394, 399

Figure 6.4.3.18.1.1-1 Non-Patient Equipment Maximum Chassis Leakage Current

PATIENT CONNECTION				
	ISOLATED [1]		ORDINARY	
Patient Interface	DC ma	AC ma RMS	DC ma	AC ma RMS
Invasive	0.014	0.010	Not Permitted	
Non-invasive	0.070[1]	0.050[1]	0.070	0.050
ENCLOSURE OR CHASSIS				
	GROUNDED		DOUBLE INSULATED	
Patient Interface	DC ma	AC ma RMS	DC ma	AC ma RMS
Invasive	0.140	0.100	0.070	0.050
Non-invasive	0.140	0.100	0.070	0.050

MSIS 501 Rev. B

Reference: 394, 399

NOTES:

1. If equipment labeling indicates "isolated," the maximum current is 0.014 ma dc/0.010 ma rms.

Figure 6.4.3.18.1.2-1 Patient Care Equipment Maximum Leakage Current

1. between each patient lead and ground, and

2. between combined patient leads and ground; and,

b. between leads

1. between any pair of patient leads, and

2. between any single patient lead and all other patient leads.

6.4.3.18.2.1 Leakage Current - Patient Care Equipment - Patient Connection - Isolated

{A}

a. Invasive Patient Interface - Isolated, patient connected, patient care equipment leakage current shall not exceed 0.014 ma DC for isolated, patient connected, patient care, Equipment such as intra-aortic pressure monitors.

b. Non-Invasive Patient Interface - Isolated, patient connected, patient care equipment leakage current shall not exceed 0.070 ma DC for isolated, patient connected, patient care, Equipment such as muscle stimulators utilizing attached body surface electrodes provided that equipment labeling does not indicate the equipment is isolated.

6.4.3.18.2.2 Leakage Current - Patient Care Equipment - Patient Connection - Ordinary

{A}

Ordinary, patient connected, patient care equipment leakage current shall not exceed 0.070 ma DC for ordinary, patient connected, patient care, Equipment such as blood pressure cuffs, thermometers, and limb muscle stimulators.

6.4.3.18.2.3 Health Maintenance System Instrumentation Grounding

{A}

Any two exposed conductive surfaces in the instrumented crewmember's vicinity shall not exceed a 40.0 millivolt potential difference at frequencies up to 1000 Hertz or less measured across a 1000 ohm resistor. conductive surfaces which can be contacted by an attending crewmember while the attending crewmember is in contact with the instrumented crewmember shall be considered as within the crewmember's vicinity.

6.4.3.18.2.4 Countermeasure System

{A}

Any two exposed conductive surfaces in the instrumented crewmember's vicinity shall not exceed a 40.0 millivolt potential difference at frequencies up to 1000 Hertz or less measured across a 1000 ohm resistor. conductive surfaces which can be contacted by an attending crewmember while the attending crewmember is in contact with the instrumented crewmember shall be considered as within the crewmember's vicinity.

6.4.3.18.2.5 Portable Medical Instrumentation

{A}

While attached to a crewmember, electrically powered medical instrumentation shall be:

a. battery powered,

b. double insulated,

c. electrically isolated from ground, and

d. not connected to vehicle power (e.g., charging).

6.4.3.19 Bioinstrumentation System Microshock Protection

{A}

All bioinstrumentation systems shall be designed with sufficient series resistance/isolation to limit to safe levels electrical shock currents that could flow through an instrumented crewmember including as the result of:

a. contact with available electric sources, including those sources applied by an attending crewmember's simultaneous contact with the instrumented crewmember and other equipment or ground, and

b. transients that may occur when the bioinstrumentation is either energized (turned ON) or deenergized (turned OFF).

Bioinstrumentation shall be designed with fault tolerant protection to prevent exceeding the current limit requirements defined within Figure 6.4.3.19-1.

6.5 TOUCH TEMPERATURE

{A}

6.5.1 Introduction

{A}

This section provides the design considerations and design requirements for surface touch temperature limits, both the upper and lower temperature limits, for IVA applications.

(Refer to Paragraph 14.2.3.11, EVA Touch Temperature and Pressure Design Requirements, for EVA-unique touch temperature limitations.)

6.5.2 Touch Temperature Design Considerations

{A}

Definition of surface touch temperature limits depends on several factors:

a. Temperature of the surface to be touched

b. Duration of touch

c. Degree of thermal control

1. Finish on surface
2. Force of contact
3. Size of contact area

d. Diffusivity of the surface touched. Diffusivity is determined by the thermal conductivity divided by the product of the density of the material times its specific heat.

Tissue burns can occur when skin temperature reaches 45°C (113°F). Objects at temperatures in excess of this can be touched safely, depending on the variables listed above, as long as skin temperature is not raised to this level during the period of contact.

CLASSIFICATION	NUMBER OF FAULTS	MAXIMUM CURRENT (milliamperes dc/rms)
INVASIVE (ref. paragraph 6.4.3.18.2.1)	0	0.014/0.010
	1	0.014/0.010
	2	0.020/0.020
NON-INVASIVE (ref. paragraph 6.4.3.18.2.2)	0	0.070/0.050
	1	0.140/0.100
	2	0.500/0.500

MSIS 500 Rev. B

Reference: 405

Figure 6.4.3.19-1 Maximum Permissable Bioinstrumentation Fault Currrent

The lower temperature limits for surfaces continuously touched by the bare skin are controlled by the dewpoint and the variables listed above.

6.5.3 Touch Temperature Design Requirements

{A}

Surface touch temperature design requirements for minimizing crewmember discomfort and injury are as follows:

a. The design goal for the maximum surface temperatures which can come into contact with bare skin shall be 40°C (104°F).

b. The maximum allowable surface temperature for continuous contact with bare skin shall be 45°C (113°F).

c. Incidental or momentary bare skin contact with surface temperatures from 46° - 49°C (114° - 120°F) is permissible. Warning labels shall be provided to alert crewmembers to these excessive temperature levels. Guards or insulation shall be provided to prevent crewmember contact with surface temperatures in excess of 49°C (120°F). Where contact with surfaces above this limit is required, adequate warning labels and protective equipment are required.

d. For surfaces that must be touched with bare skin, the minimum temperature shall not be below 4°C (39°F). Where contact with surfaces below this limit is required, adequate warning labels and protective equipment are required.

(Refer to Paragraph 14.2.3.11, EVA Touch Temperature and Pressure Design Requirements, for EVA-unique touch temperature requirements.)

6.6 FIRE PROTECTION AND CONTROL

{A}

6.6.1 Introduction

{A}

This section provides fire hazard design considerations and requirements that pertain to the man/system interface. This includes fire detection and warning, crew interfaces with fire extinguishing systems, and crew emergency procedures. Materials selection, sensors, extinguishing systems are outside the scope of this document. Users interested in these topics should refer to Reference 1, Section 3.5.2, and Reference 21, DN3N2.

6.6.2 Fire Protection and Control Design Considerations

{A}

Fire is one of the most difficult hazards with which to cope in the aerospace environment. From the first statement of mission concept, the interactions between fire hazards and vehicle configuration must be analyzed and corrective action initiated during the initial design phases when cost is at a minimum.

a. Fire Hazard - Any cabin atmosphere where oxygen concentration is greater than 30% by volume is considered hazardous and special considerations must be made. Although the fire hazard is reduced significantly by the use of a two-gas system, it cannot be completely eliminated. The ignition temperature of most materials is decreased as much as 50% when exposed to this type of atmosphere. Spacecraft atmospheres of 100% oxygen amplify the dangers of fire once ignition occurs. This increased potential fire hazard places special emphasis on material selection and system design. Only materials with high ignition temperatures, slow combustion rates, and low explosion potentials should be used inside the pressurized cabin. Atmosphere movement by ventilation, cabin venting, or even crew movement can resupply the

fire with oxygen, allowing flame propagation in the absence of convection.

First response during a fire emergency in a "shirt-sleeve environment" should be to don an oxygen mask and turn off cabin ventilation. The oxygen mask is necessary because rapid oxygen consumption and toxic products of combustion allow little time for corrective action once the fire starts.

Careful design and proper choice of atmosphere and materials, in conjunction with a design hazard study to reduce flame propagation, can ensure that the three conditions of combustion (fuel, oxygen, and ignition source) are not encountered.

b. Toxic Hazards - Within the confines of a space module, toxic products of combustion may pose a serious threat to the crew since the oxygen supply is limited and large amounts of carbon monoxide can be generated.

c. Fire Extinguishing - The fire potential within a spacecraft cabin cannot be totally eliminated. Spacecraft atmospheres make the cabin a fire zone and so require fire detection and extinguishing systems. Materials should be selected which minimize the likelihood of ignition, limit the spread of fire, and are self-extinguishing. Housekeeping also affects this potential because pure, nonflammable waste does not exist. Toxic and flammable gases from waste can evolve and the interaction of various items can cause spontaneous combustion. Therefore it is necessary to consider an integrated spacecraft fire extinguishing system. Selection of a fire extinguishing system for a spacecraft presents a unique problem. It must be usable in a microgravity environment and be completely compatible with an enriched oxygen atmosphere. In addition, the extinguishing agent must not support combustion in an oxygen enriched environment, emit toxic or anesthetic products when applied to a fire, interfere with visual observation, or result in liquid or solid residue that will contaminate the spacecraft. Information available indicates three agents which best satisfy these basic requirements: carbon dioxide, Halon 1301, and water or water based agents.

d. Venting - Venting or cabin depressurization may be useful in dealing with accidental fires or cleanups. Venting action may initially accelerate flame propagation, depending on vent location and other considerations. Venting may be impractical for the following reasons: crewmembers are normally not in space suits, time to don space suits, ability to don a suit without assistance, and ability to don a suit in poor lighting (electrical equipment damage), and other stress factors should point out the inability of using this as an operational technique. The quantity of oxygen onboard is a governing factor in determining the use of venting. Therefore, if the loss of oxygen in an unmanned area or compartment can be tolerated, then the possible use of venting for fire control or cleanup should be considered.

e. Detection Systems - The ability to detect an inflight fire is difficult to predict. Open fire may be seen, although the heat load may not be sensed. Convection is provided in manned areas and this could make smoke visible or cause its odor to be detected. The enclosed out-of-sight regions around electrical equipment may not produce convection. Incipient overheated conditions may exist for extended periods before a fire occurs. These are not easy to detect unless sensors are provided. Also, the effect of microgravity, without convection or reduced convection, may cause no initial flame flicker.

(Refer to Reference 21, DN3N2, for more detailed discussion of manned spacecraft fire protection and control.)

6.6.3 Fire Protection and Control Design Requirements

{A}

Fire protection and control design requirements are given below.

6.6.3.1 General Requirements

{A}

6.6.3.1.1 Fire Protection System

{A}

A fire protection system comprising detection, warning, and extinguishing devices shall be provided during all mission phases.

6.6.3.1.2 Material Selection

{A}

Only approved fire-retardant materials shall be used.

6.6.3.2 Detection Requirements

{A}

6.6.3.2.1 Detection System Signals

{A}

The fire detection system shall provide signals to the vehicle warning system.

6.6.3.2.2 Reset and Self-test

{A}

The fire detection system shall have reset and self-test capabilities.

6.6.3.2.3 Sensor Replacement

{A}

All sensors shall be replaceable and accessible.

6.6.3.3 Warning System Requirements

{A}

Warning - General requirements for the fire warning system are as follows:

(Refer to Paragraph 9.4, Caution and Warnings, for complete description of design considerations and requirements.)

a. The caution and warning system shall include a fire warning system to alert the crew in case of a fire.

b. The fire warning system shall be capable of operating independently.

c. Warnings shall be both visual and auditory to provide maximum information to the crew for timely action.

d. The visual fire warning display shall be aviation red in accordance with MIL-STD-25050.

6.6.3.4 Extinguishing Requirements

{A}

a. Automatic extinguishing equipment shall be provided to aid the crewmember in containing and extinguishing fires.

b. Design of the vehicle and its components shall provide for rapid access with fire fighting equipment.

c. Chemical agents used for fire extinguishing shall be compatible with the toxicity requirements of the spacecraft.

d. Portable fire extinguishers shall be provided for open areas and a fixed fire extinguishing system shall be provided for enclosed inaccessible areas.

e. Capability for removal of expended fire extinguishing material during post-fire cleanup shall be provided.

f. Automatic extinguishing systems shall incorporate a disabling feature to prevent inadvertent activation during servicing.

6.7 DECOMPRESSION HAZARDS

{A}

The major effects of failure of a pressurized cabin or a space suite arises from;

a. hypoxia due to the reduction in the partial pressure of oxygen in the lungs,

b. decompression sickness due to the evolution of nitrogen bubbles in the blood and tissues,

c. expansion of gas within various body cavities,

d. cold injury and hypothermia due to exposure to low ambient temperatures and convective cooling of the individual,

e. and vaporization of tissue fluids.

The physiological constraints imposed by these potential hazards requires judicious tradeoffs in order to meet engineering limitations and operational objectives so that performance, comfort, and protection of crewmembers are not compromised.

6.7.1 Hypoxia

{A}

Hypoxia is the most serious hazard following decompression. Although the degree of hypoxia is primarily related to the pressure to which the crewmember is exposed, the pressure differential and rate as well as the time elapsing before an adequate pulmonary partial pressure of oxygen is restored also influences the degree of the hypoxia in the period immediately following the decompression.

6.7.2 Decompression Sickness

{A}

The incidence of symptoms of decompression sickness depends on the absolute pressure and the duration of exposure. There are wide differences between individuals in their susceptibility to decompression sickness. Several factors seem to predispose individuals to decompression sickness, such as age, obesity and physical activity.

6.7.3 Gas expansion

{A}

Gas expansion is generally not a significant problem during rapid decompression. Gas containing body cavities include the lungs, middle ear, sinuses, and gastrointestinal tract. Although the lung contains the largest volume of gas, rarely does pulmonary barotrauma occur; an overpressure of approximately 80 mm Hg is required. If pulmonary barotrauma occurs, a secondary hazard, that of arterial gas embolism can occur.

6.7.4 Short Duration Exposure

{A}

A short duration exposure to low temperatures will not cause serious impairment of performance or serious injury to individuals wearing light-weight clothing which encompasses the whole body. However, if exposure to low temperature lasts for more than a few minutes, uncovered skin will be damaged and general hypothermia may occur.

6.7.5 Vaporization of Tissue Fluids

{A}

Vaporization of tissue fluids will occur on exposure to pressures less than 47 mm Hg if portions of the body remain unpressurized. The need to maintain adequate oxygen pressure in the respiratory tract, and hence throughout the cardiovascular system to prevent hypoxia, also prevents vaporization of tissue fluids, except in the skin and subcutaneous tissues of unpressurized regions of the body.

Table of Contents **Page**

7.0	**HEALTH MANAGEMENT**	**7-1**
7.1	**INTRODUCTION**	**7-1**
7.2	**PREVENTATIVE CARE**	**7-1**
7.2.1	Introduction	7-1
7.2.2	Nutrition	7-1
7.2.2.1	Introduction	7-1
7.2.2.2	Nutrition Design Considerations	7-1
7.2.2.2.1	Goal of Nutrition Program Design Considerations	7-1
7.2.2.2.2	Food Acceptabiliry Design Considerations	7-1
7.2.2.2.3	Food and Water Quality and Quantity Design Considerations	7-2
7.2.2.3	Nutrition Design Requirements	7-3
7.2.2.3.1	Food Design Requirements	7-3
7.2.2.3.2	Potable Water Design Requirements	7-5
7.2.2.4	Example Nutritional Program	7-5
7.2.3	Reduced Gravity Countermeasures	7-5
7.2.3.1	Introduction	7-5
7.2.3.2	Reduced Gravity Countermeasures Design Considerations	7-5
7.2.3.3	Exercise Countermeasures	7-10
7.2.3.3.1	Introduction	7-10
7.2.3.3.2	Exercise Countermeasures Design Considerations	7-10
7.2.3.3.2.1	Deconditioning Effects Of Reduced G Design Considerations	7-10
7.2.3.3.2.2	Deconditioning Countermeasure Design Considerations	7-10

7.2.3.3.3 Exercise Countermeasure Design Requirements 7-12

7.2.3.4 Nonexercise Countermeasures 7-13

7.2.3.4.1 Introduction 7-13

7.2.3.4.2 Nonexercise Countermeasures Design Considerations 7-13

7.2.3.4.3 Nonexercise Countermeasures Design Requirements 7-13

7.2.4 Sleep 7-14

7.2.4.1 Introduction 7-14

7.2.4.2 Sleep Design Considerations 7-14

7.2.4.3 Sleep Design Requirements 7-15

7.2.5 Personal Hygiene 7-15

7.2.5.1 Introduction 7-15

7.2.5.2 Personal Hygiene Design Considerations 7-15

7.2.5.3 Personal Hygiene Design Requirements 7-15

7.2.5.3.1 Body Grooming Design Requirements 7-15

7.2.5.3.2 Partial Body Cleansing Design Requirements 7-16

7.2.5.3.3 Oral Hygiene Design Requirements 7-16

7.2.5.3.4 Whole Body Cleansing Design Requirements 7-16

7.2.5.3.5 Personal Clothing Equipment Cleansing Design Requirements . . 7-16

7.2.5.3.6 Personal Hygiene Water Design Requirements 7-16

7.2.6 Pre/Post-Mission Health Management 7-16

7.2.6.1 Introduction 7-16

7.2.6.2 Pre/Post-Mission Health Management Design Considerations . . 7-20

7.2.6.3 Pre/Post-Mission Health Management Design Considerations . . 7-21

7.2.7 Health Monitoring 7-21

7.2.7.1 Introduction 7-21

7.2.7.2 Routine Health Monitoring Design Considerations 7-21

7.2.7.2.1 Routine Crew Health Monitoring Design Considerations 7-21

7.2.7.2.2 Water Quality Monitoring Design Considerations 7-21

7.2.7.2.2.1 Toxicological Monitoring Design Considerations 7-21

7.2.7.2.2.2 Microbiological Monitoring Design Considerations 7-22

7.2.7.2.2.3 Physical Monitoring Design Considerations 7-23

7.2.7.3 Routine Health Monitoring Design Requirements 7-24

7.2.7.3.1 Routine Crew Health Monitoring Design Requirements 7-24

7.2.7.3.2 Water Quality Monitoring Design Requirements 7-24

7.2.7.3.2.1 Water Quality Monitoring Schedule Design Requirements 7-24

7.2.7.3.2.2 Chemical Monitoring Design Requirements 7-24

7.2.7.3.2.3 Microbiological Monitoring & Treatment Design Requirements . . 7-27

7.2.7.3.2.4 Physical Monitoring Design Requirements 7-27

7.2.7.3.3 Environmental Monitoring Design Requirements 7-27

7.2.8 Biological Payloads 7-28

7.3 MEDICAL CARE 7-28

7.3.1 Introduction 7-28

7.3.2 Medical Care Design Considerations 7-28

7.3.2.1 Objectives of Medical Care Design Considerations 7-28

7.3.2.2 Anticipated Illnesses and Injuries Design Considerations 7-28

7.3.2.3 Earth-versus Space-Based Medical Care Design Considerations . . 7-29

7.3.3	Medical Care Design Requirements	7-29
7.3.3.1	General Design Requirements	7-29
7.3.3.2	Prevention Design Requirement	7-30
7.3.3.3	Diagnostic Design Requirements	7-30
7.3.3.4	Treatment (Therapeutics) Design Requirements	7-30
7.4	Crew Survival	7-30
7.4.1	Introduction	7-30
7.4.2	Crew Survival Design Considerations	7-30
7.4.3	Crew Survival Design Requirements	7-30
7.4.3.1	Medical Kit Design Requirements	7-31
7.4.3.2	Crew Survival Kit Design Requirements	7-31

7.0 HEALTH MANAGEMENT
{OP}

7.1 INTRODUCTION
{A}

This section discusses the measures that must be taken to maintain the health of the crew. The following topics are covered:

a. Preventive Care - Non-medical measures that must be taken to preserve crew health.

b. Medical Care - Medical functions of prevention, diagnosis, and treatment.

This section discusses only functional considerations and requirements. Sections that discuss facilities and equipment required to implement these functions are referenced in applicable paragraphs.

7.2 PREVENTIVE CARE
{A}

7.2.1 Introduction
{A}

This section identifies and discusses the activities considered necessary for a crewmember to maintain good health in a reduced gravity environment. The subsections discuss the consideration and requirements for the following preventive care measures:

a. Nutrition.

b. Reduced gravity countermeasures.

c. Health monitoring.

d. Sleep.

e. Personal hygiene.

f. Pre- and post-mission health management.

Facilities and equipment for implementation of preventive care are discussed in Section 10.0, Activities Centers.

7.2.2 Nutrition
{A}

7.2.2.1 Introduction
{A}

This section discusses the food and water intake requirements of the crewmembers. The information applies primarily to an IVA environment and reduced gravity conditions. The water requirements apply to potable water only.

(Refer to Paragraph 7.2.5.3.6, Personal Hygiene Water Requirements, for information on water for personal hygiene.)

(Refer to Paragraph 14.2.3.6, EVA Food and Drinking Water Design Requirements, for specific nutritional requirements when performing EVA activities.)

7.2.2.2 Nutrition Design Considerations
{A}

7.2.2.2.1 Goal of Nutrition Program Design Considerations
{A}

The goal of the nutrition program is to establish an Earth-normal pattern and quality of meals while meeting the physiological requirements of the crew.

7.2.2.2.2 Food Acceptability Design Considerations
{A}

The following factors affect the acceptability of the food and the appetite of the crewmembers:

a. Past Experience And Personal Preference - Generally, a taste for new foods must be acquired. This will be an important consideration with international crews. Pre-mission crew selection of menus is desirable.

b. Variety - Food can lose its acceptance if eaten too frequently. A wide variety of foods is desirable. Food may also be varied by changing the form, texture, and flavor, without affecting nutritional content. The use of colors, shapes, garnishes, and portions in meal presentation, as well as packaging color, utensil shape and size, and visual display of trays may also enhance the eating experience.

c. Waste Management Facilities - In the past, inadequate body waste management facilities have discouraged food consumption.

(Refer to Paragraph 10.3, Body Waste Management, for design requirements of body waste management facilities.)

d. Space Adaptation Syndrome - Control of Space Adaptation Syndrome is essential for a better appetite.

(Refer to Paragraph 7.2.3.4.3, Nonexercise Countermeasures Design Requirements, for additional information.)

e. Atmospheric Contaminants - The buildup of background odors during missions may contribute subliminally to a decrease in appetite and consumption as a result of fatigue or adaptation.

(Refer to Paragraph 5.1, Atmospheric Control, for additional information.)

f. Availability - Snacks should be available with a minimum of preparation. This is particularly important for high energy output tasks such as EVA operations.

g. Food Form - The more Earth-normal quality of the food, the more acceptable it will be. This includes the desirability of fresh fruits and vegetables. Precooked frozen food has the highest overall acceptability of the current available methods of preservation.

h. Meal Scheduling - Lack of consistent meal periods in the crew schedule can lead to skipped meals and undernourishment.

i. Microgravity Environment - Some U.S. and Soviet space crews have reported that changes in taste and odor perception of foods occur during space flights. This may be due to body fluid shift and resulting head congestion.

(Refer to Paragraph 4.4, Olfaction and Taste, for additional information.)

7.2.2.2.3 Food and Water Quality and Quantity Design Considerations

{A}

The type and quantity of food and liquid required by an individual is dependent on a number of factors. These factors must be considered when establishing an individual menu. These factors include:

a. Crewmember Size and Activity Level - The level of activities and size of the crewmember influence the required calories and water intake. EVA activities, for instance, require a higher energy output.

b. Microgravity Effects - There are many unknown factors involved in the area of microgravity space nutrition and metabolism. The food provided must be varied and easily accessible such that a crewmember's individual needs and cravings can be satisfied. The food provided must be of sufficient quality, quantity, and nutrient content to meet the energy demands of various activities (e.g., EVA, countermeasure training, daily work activities), while accommodating each crew member's individual needs and desires.

c. Food Rehydration - The total amount of potable water required depends in part on the food rehydration requirements of the mission. This is illustrated in Figure 7.2.2.2.3-1, which shows food and water quantity requirements for varying levels of food hydration. The total water per person-day (rehydration water, drinking water, and water in food and beverages) is assumed to be 3 Kg (6.6 lbs). In the Figure, food packaging is assumed to be 0.5 Kg (1.1 lbs) and dry food weight 0.7 Kg (1.6 lbs).

d. Space Module Environment - Space module temperature and humidity impact the amount of water ingested.

7.2.2.3 Nutrition Design Requirements

{A}

7.2.2.3.1 Food Design Requirements

{A}

The food provided shall meet the following requirements:

a. Minimum Nutritional Requirements.

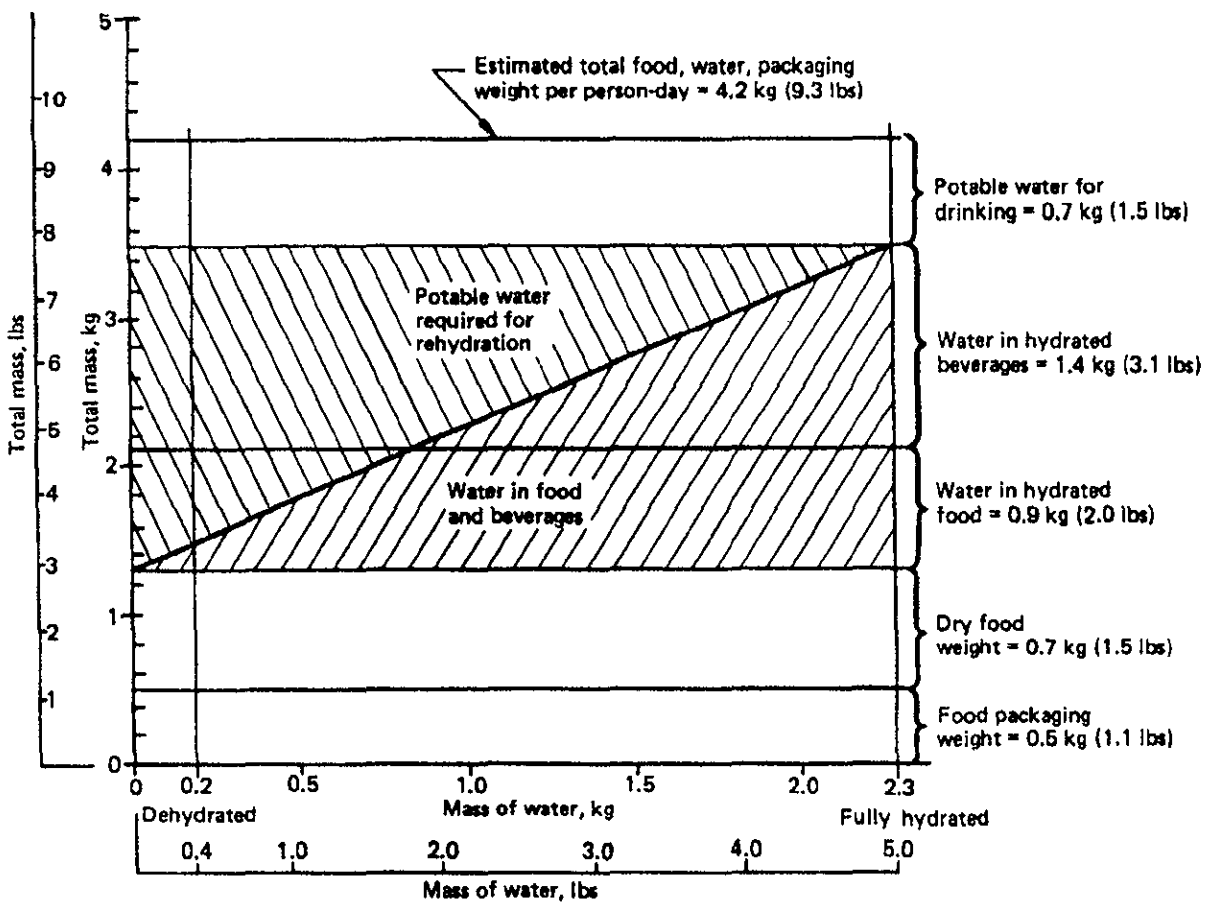

Reference: 107, page 410

Figure 7.2.2.2.3-1. Typical Mass of Food and Water per Person-Day for Varying Levels of Food and Beverage Hydration

MSIS-185

1. The diet shall supply the nutritional quality required by JSC 32283 (Nutritional Requirements for Extended Duration Missions .

2. Additional nutritional requirements are required for EVA as per body size, EVA tasks, and duration of EVA. Foods and fluids shall be specifically allocated for this requirement per Paragraph 14.2.3.3.

b. Nutritional Program Monitoring - An automated nutrient monitoring process shall be provided that meets the nutrient monitoring requirements as specified in JSC 32283. Parameters required for medical or investigative purposes shall include documenting:

1. the crewmember that consumed the food.

2. amount of food consumed

3. time and date of consumption,

4. food item/lot number/serial number.

Data shall be downlinked periodically for analysis and must provide information in format acceptable for post flight analysis.

c. Microbiology - Microbiological acceptability limits shall be as given in Figure 7.2.2.3.1-1.

AREA/ITEM	MICROORGANISM TOLERANCES	
1. Food Production Area	Samples Collected*	Limits (CFU**)
a. Surfaces	3 surfaces sampled per day	<=3/cm^2
b. Packaging Film	Before use	<=3/cm^2
c. Food Processing Equip.	2 pieces sampled per day	<=3/cm^2
d. Air	1 sample of 0.282 M^3 (10ft)	<=13/320 liters
1. Food Production Area	Samples Collected*	Limits (CFU**)
a. Nonthermostabilized	Total aerobic count	<=10,000/g
	Escherichia coli	<=1/g
	Coagulase positive Staphylocci	<=1/5g
	Salmonella	<=1/25g
	Clostridium Perfringens	<100/g
	Yeast and molds	<100/g

MSIS 308 Rev. B

* Sample collected only on days that food facility is in operation
** Total aerobic count
Reference:406

Figure 7.2.2.3.1-1 Microbiology Contamination Control Specification For Crew Food

7.2.2.3.2 Potable Water Design Requirements

{A}

a. Quality - The potable water quality requirements are given in Figure 7.2.2.3.2-1.

b. Quantity - The supply of available water for drinking and hydration of food dependent on degree of food hydration shall be given in Figure 7.2.2.3.2-2, the potable water quantity requirements. The supply of available water for drinking and rehydration of food is listed below:

1. Operational Mode - 2.84 to 5.16 Kg per person-day (6.26 to 11.35 lbs per person-day)

2. Degraded and Emergency Mode - 2.84 Kg per person-day (6.26 lbs per person-day)

c. Emergency - The supply of available water for drinking and rehydration of food shall be a minimum of 0.95 Kg (2.1 lbs) per person for each eight hours of anticipated emergency vehicle occupancy time, including orbital loiter time and time on the earth's surface without rescue services. An additional 1 Kg (2.2 lbs) of water and 8 one gram salt tablets shall be provided for each person for the purpose of supporting re-entry fluid loss countermeasures.

d. Temperature - Drinking water temperatures shall be as follows:

1. Cold Water - Cold water temperature shall be 1.6 degrees to 7.2 degrees C (35 degrees to 45 degrees F).

2. Ambient Water - Ambient water temperature shall be 15.5 degrees to 26.7 degrees C (60 degrees to 80 degrees F).

3. Hot Water - Means shall be provided for heating water up to 68 degrees +/- 2.8 degrees C (155 degrees +/- 5 degrees F).

7.2.2.4 Example Nutritional Program

{O}

The menus on the Space Transportation System (Shuttle) are designed to provide the nutrients in Figure 7.2.2.4-1 in three meals per person per day.

7.2.3 Reduced Gravity Countermeasures

{OP}

7.2.3.1 Introduction

{OP}

The following section discusses the effects of gravitational changes on the human body and countermeasures that can be taken to maintain crew health. Space gravity environments can vary from multi-G (during launch) to microgravity in orbit. This section primarily deals with microgravity. The considerations and requirements apply to all reduced gravity conditions but proportionally less with increasing gravity. Specific countermeasure requirements for reduced gravity greater than microgravity must be established on an individual basis. Figure 7.2.3.1-1 illustrates the time course of shifts in various physiological parameters associated with acclimation to the micro-g environment.

7.2.3.2 Reduced Gravity Countermeasures Design Considerations

{OP}

Reduced gravity countermeasures fall into three general categories which are described below:

a. Countermeasures Against Initial Response to Reduced Gravity - There are several responses that begin within the first few hours of exposure to reduced gravity and continue for from one to five days depending on the individual. These responses are:

1. Vestibular side effects and space motion sickness.

QUALITY PARAMETERS	LIMITS
PHYSICAL PARAMETERS	
Total solids (mg/l)	100
Color True (Pt/Co units)	15
Taste (TTN)	3
Odor (TON)	3
Particulates (max size - microns)	40
pH	6.0-8.5
Turbidity (NTU)	1
Dissolved Gas (free @ 37°C)	Note 1
Free Gas (@ STP)	Note 1
INORGANIC CONSTITUENTS (mg/l) (See Notes 2 and 5)	
Ammonia	0.5
Arsenic	0.01
Barium	1.0
Cadmium	0.005
Calcium	30
Chlorine (Total - Includes Chloride)	200
Chromium	0.05
Copper	1.0
Iodine (Total - Includes Organic Iodine)	15
Iron	0.3
Lead	0.05
Magnesium	50
Manganese	0.05
Mercury	0.002
Nickel	0.05
Nitrate (NO_3-N)	10
Potassium	340
Selenium	0.01
Silver	0.05
Sulfate	250
Sulfide	0.05
Zinc	5.0
BACTERICIDE (mg/l)	
Residual Iodine (minimum)	0.5
Residual Iodine (maximum)	4.0
AESTHETICS (mg/l)	
Cations	30
Anions	30
CO_2	15

MSIS 418
REV. A

Figure 7.2.2.3.2-1 Potable Water Quality Requirements (Maximum Contaminant Levels)

QUALITY PARAMETERS	LIMITS
MICROBIAL	
Bacteria (CFU/100 ml)	
Total Count	1
Anaerobes	1
Coliform	1
Virus (PFU/100 ml)	1
Yeast & Mold (CFU/100 ml)	1
RADIOACTIVE CONSTITUENTS (pCi/l)	Note 3
ORGANIC PARAMETERS (ug/l) (See Note 2)	
Total Acids	500
Cyanide	200
Halogenated Hydrocarbons	10
Total Phenols	1
Total Alcohols	500
Total Organic Carbon (TOC)	500
Uncharacterized TOC (UTOC) (ug/l) (See Note 4)	100
ORGANIC CONSTITUENTS (mg/l) (See Notes 2 & 5)	

Reference: 278
With Updates

Notes:

1 No detectable gas using a volumetric gas vs. fluid measurement system. Excludes CO_2 used for aesthetic purposes.

2 Each parameter/constituent MCL must be considered individually and independently of others.

3 The maximum contaminant levels for radioactive constituents in potable and personal hygiene water shall conform to Nuclear Regulatory Commission (NRC) regulations (10CFR20, et al.). These maximum contaminant levels are listed in the Federal Register, Vol. 51, No. 6, 1986, Appendix B, as Table 2 (Reference Level Concentrations) Column 2 (Water). Control/containment/monitoring of radioactive constituents shall be the responsibility of the user. Prior to the introduction of any radioactive constituents shall be obtained from the Radiation Constraints Panel (RCP). The RCP will approve or disapprove proposed monitoring and decontamination procedures on a case-by-case basis.

4 UTOC equals TOC minus the sum of analyzed organic constituents, expressed in equivalent TOC.

5 In the event a quality parameter not listed in this table is projected, or found, to be present in the reclaimed water, the Water Quality Manager from NASA authorizing authority shall be contacted for a determination of the MCL for that parameter.

Figure 7.2.2.3.2-1 Potable Water Quality Requirements (Maximum Contaminant Levels)

MSIS412C
Rev. B

UNITS	MODE		
	Operational	90 Day Degraded[1]	Emergency[3]
lb/ person-day	6.26[2] - 11.35[2]	6.26[2]	6.26[2]
kg/ person-day	2.84 - 5.16	2.84	2.84

MSIS 409 Rev. A

Reference: 278

With Updates

1 Degraded levels meet "fail operational criteria".

2 Based on 2950 kcal/person-day IVA work rate. Actual amount depends on degree of hydration of the food.

3 Safe Haven conditions shall be maintainable for up to 45 days.

Figure 7.2.2.3.2-2 Potable Water Quantity Requirements

Energy (kcal)	WHO equation	Vitamin B6 (mg)	2.0 men 1.6 women
Protein % of calories	12 - 15	Vitamin B12 (µg)	2.0
Vitamin A (RE)	1000 Ng/d men 800 Ng/d women	Calcium (mg)	800-1200
Vitamin D (Ug)	10	Phosphorus (mg)	800-1200
Vitamin E (TE)	10 men 8 women	Iodine (mg)	150
Ascorbic acid (mg)	100	Iron (mg)	10
Folate (µg)	200 men 180 women	Magnesium (mg)	350 men 280 women
Niacin (mg NE)	19 men 15 women	Zinc (mg)	15 men 12 women
Riboflavin (mg)	1.7 men 1.3 women	Potassium (mg)	3500
Thiamin	1.5 men 1.1 women	Sodium (mg)	1100-3300

MSIS 157 Rev. B

Reference: 309, page 23
406 With Updates

Figure 7.2.2.4-1 Example Nutrition Program - Nutrient Requirements in Three Meals Per Person Per Day

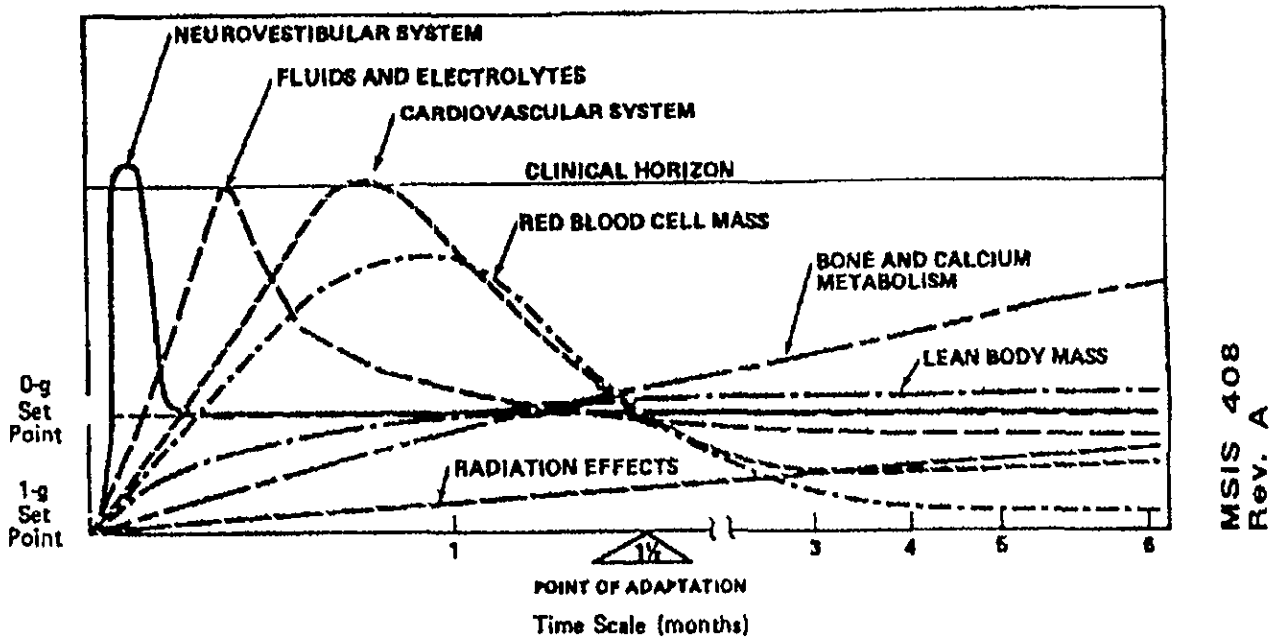

Reference: 208, Figure 1, page 134
With Updates
Figure 7.2.3.1-1 Time course of physiologcal shifts associated with acclimation to the micro-g environment

2. Reduced motor skills due to unfamiliarity with reduced gravity.

3. Loss of Body Fluids - Body fluids shift headward in reduced gravity conditions, resulting in increased urination and fluid loss.

(Refer to Paragraph 7.2.3.4, Nonexercise Countermeasures, for information on countermeasures for the above effects.)

(Refer to Section 4.0, Human Performance Capabilities, for information on vestibular effects and motor performance in reduced gravity.)

b. Maintenance Of 1-G Conditioning - The body slowly loses conditioning with exposure to reduced gravity. Counter measures should be considered against at least the following three deconditioning effects:

1. Loss of strength and muscle mass.

2. Loss of bone minerals.

3. Loss of cardiovascular conditioning.

Exercise is the primary countermeasure against these effects and is discussed in Paragraph 7.2.3.3.

c. Countermeasures Against Initial Response Upon Entry to 1-G - After exposure to reduced gravity, the human body makes several immediate adjustments when exposed to 1-G conditions.

The following are responses for which countermeasures should be considered:

1. Dehydration - This is due to the fluid losses during microgravity.

2. Rapid shift of fluids to the lower body due to re-exposure to the 1-G environment.

3. Reduced motor capabilities in 1-G.

Countermeasures against these effects are discussed in Paragraph 7.2.3.4.

7.2.3.3 Exercise Countermeasures

{OP}

7.2.3.3.1 Introduction

{OP}

This section discusses the exercise countermeasures against the deconditioning effects of reduced gravity that have resulted in loss of muscular strength and cardiorespiratory endurance.

(Refer to Paragraph 10.8, Microgravity Countermeasures, for information on the facility requirements for these exercise countermeasures.)

7.2.3.3.2 Exercise Countermeasures Design Considerations

{OP}

7.2.3.3.2.1 Deconditioning Effects Of Reduced G Design Considerations

{OP}

Two of the most immediate and significant effects of microgravity are the removal of weight forces from bone and muscle, and the headward shift of fluids. These changes lead to a progressive degradation of muscles, the skeletal system, and cardiovascular conditioning by Earth's standards. Musculoskeletal system changes, brought about by lack of exercise and the absence of gravitational forces, are mostly reversible, but they contribute to weakness and poor gravitational tolerance in the post-mission period. Cardiovascular deconditioning is manifested by a post-mission orthostatic intolerance, decreased cardiac output, and reduced exercise capacity. Both forms of deconditioning may impair the ability of an individual adapted to weightlessness to function and perform adequately during EVA or the critical phases during entry and landing.

7.2.3.3.2.2 Deconditioning Countermeasure Design Considerations

{OP}

Because the underlying factor producing the changes leading to both cardiovascular and musculoskeletal deconditioning in the absence of gravity, the effort to reduce these deconditioning effects has been primarily focused on restoring weight forces, stresses, and system interactions by simulating Earth-normal physical movements. The single approach which so far has received wide operational acceptance in the U.S. and USSR space programs is exercise. The following are considerations to be made when designing a reduced gravity exercise countermeasure program:

a. Type of Exercise - Exercises necessary to counteract the effects of reduced gravity are listed in Figure 7.2.3.3.2.2-1.

b. Mission Duration - For short-term missions (less than 10 days), pre-mission conditioning of crewmembers to elevated levels of fitness should compensate for the anticipated decrements in physiological function so that impairment during entry, landing and post-mission will be tolerable. Even for these short missions, however, in the interest of crew morale, some opportunity to exercise should be provided. For missions during which crewmembers will be exposed to microgravity for greater than 10 days, deconditioning countermeasures will be essential.

Exercise Countermeasures		
Problem	Exercise	Comment
Bone mineral loss	Impact activities plus maximum isometric strength exercises	While evidence is mixed, these attempts should be continued; treadmill is suitable for impact activity
Muscular strength losses	Low frequency, high resistance exercises for all major muscle groups	Simulated one-g weight training program can be used, for instance, a rowing action ergometer.
Cardiovascular function (aerobic power) loss	Aerobic type exercise	Cycle and rowing type ergometer superior to treadmill for monitoring, quantifying, and ease of use

MSIS-189
REV A

Reference: 320

Figure 7.2.3.3.2.2-1. Exercise Countermeasure Design Considerations

c. Limitations of Exercise Program - Until recently, it was believed that a proper exercise program could reverse the significant physiological/anatomical changes associated with the body's response to microgravity. However, studies of prolonged bedrest suggest that exercise, by itself, is insufficient to meet these ends. For instance, changes in endocrine and metabolic functions now are believed to result from changes in hydrostatic pressure and from lack of postural cues, rather than from a lack of activity. There is a possibility, however, that activities of higher intensity or longer duration could have countered these changes.

d. Motivational Factors - Motivation is an extremely important consideration. All of the planning and equipment can be wasted if the crewmembers are not motivated to participate in an exercise program. The following factors play an important role in the motivation of crewmembers:

1. Understanding - The crewmembers should be aware that the exercise program is providing positive benefits to their health and will benefit both in a reduced gravity environment and in their eventual return to Earth. For protracted durations in space, exercise countermeasures may be essential to mission fulfillment.

2. Feedback - Performance monitoring/display devices and record keeping to evaluate progress are known tools for enhancing motivation. Video displays and computerized programs are available for exercise equipment in a myriad of formats. This approach can be utilized to provide this feedback, as well as entertain the exercising crewmember.

3. Entertainment and Diversion - Video, music, reading materials, social interaction, Earth-viewing windows, etc., may act as a diversion to keep exercise from becoming monotonous for some crewmembers.

4. Games - Designing exercises that have an element of play can provide positive motivation. For instance, gravity forces less than 1-G constitute a new environment with a new set of physical challenges.

5. Facilities - Facilities that require little preparation prior to exercise and minimal stowage afterward are essential if crewmembers are to maintain motivation and adherence to the program.

(Refer to Paragraph 10.8, Microgravity Countermeasures, for information on exercise facility design.)

6. Support Facilities - Adequate facilities for washing and resting after exercise are necessary for motivation.

(Refer to Paragraph 10.2, Personal Hygiene, for information on body washing facility design and to Paragraph 10.4, Crew Quarters, for information on resting facility design.)

7.2.3.3.3 Exercise Countermeasure Design Requirements

{OP}

Exercise countermeasure requirements apply to space missions that expose crewmembers to microgravity conditions for longer than 10 days. For missions of 10 days or less, exercise countermeasures shall be available for crewmembers as necessary to maintain performance during the mission on entry to 1-G. The following are the exercise countermeasure design requirements:

a. Types of Exercise - The space module shall provide facilities for the following types of exercise:

1. Equipment for placing isokinetic, isotonic (concentric and eccentric), and isometric force upon the major muscle groups of the body shall be provided in order to counter "disuse atrophy" caused by microgravity.

2. Devices for exercising the cardiorespiratory system by engaging large skeletal muscle masses (i.e., aerobic exercises) as partial countermeasure to cardiovascular deconditioning shall be provided.

b. Duration of Exercise - Facilities and scheduling shall provide the capability for all crewmembers to exercise not less than 1 hour per day.

c. Exercise Regimens - Capability shall be provided for establishing and updating individualized exercise routines and goals for each crewmember.

d. Motivation and Training - Appropriate motivational devices and/or incentives shall be provided. Crewmembers shall be trained in the importance of exercise and how to use the equipment.

e. Data Monitoring of Exercise - There shall be the capability to monitor physiological parameters during exercise, store the data, and downlink this information to Earth. The following physiological parameters shall be monitored:

1. Routine Monitoring.

(a) Heart Rate.

(b) Duration of Exercise Period

(c) Power Output From Instrumented Exercise Device

2. Periodic Monitoring

(a) Electrocardiogram

(b) Blood Pressure

(c) Maximal and Submaximal Oxygen Uptake

(d) Muscle Performance

(e) Body Mass Measurement

7.2.3.4 Nonexercise Countermeasures

{OP}

7.2.3.4.1 Introduction

{OP}

This section discusses the nonexercise countermeasures for the deconditioning effects of reduced gravity. Nutrition, which plays a supportive role to other countermeasures, is discussed in Paragraph 7.2.2.

7.2.3.4.2 Nonexercise Countermeasures Design Considerations

{OP}

Exercise is the primary countermeasure against the body deconditioning effects of extended exposure to reduced gravity conditions. Other body effects appear more rapidly upon changes in the gravity environment. These effects should also be considered in mission planning and in providing countermeasures. The significant immediate effects due to changes in gravity conditions are as follows:

a. Vestibular side effects and space motion sickness in reduced gravity.

b. Loss of body fluids soon after exposure to reduced gravity (this results in dehydration when the fluids redistribute on exposure to 1-G conditions).

c. Reduced motor performance in a novel gravity environment (this requires training and adaptation and occurs both on entry to 1-G and microgravity conditions).

7.2.3.4.3 Nonexercise Countermeasures Design Requirements

{OP}

Nonexercise countermeasures shall be provided regardless of the duration of the mission. The following are required countermeasures:

a. Pressurized Countermeasures - Lower body positive pressure devices for gravity protection during 1-G entry and landing shall be provided.

b. Pharmacological Countermeasures - Pharmacological methods, including oral rehydration, shall be provided to increase the body's total fluid volume. These countermeasures shall be available for implementation just prior to entry into a 1-G environment.

c. Space Motion Sickness Countermeasures Space motion sickness countermeasures shall be provided and shall include:

1. Prophylactic medication.

2. Scheduling so that activities which require head and body translation movements are minimized during the early days of the mission.

7.2.4 Sleep

{A}

7.2.4.1 *Introduction*

{A}

This section on sleep includes:

a. Effects of microgravity on sleep needs.

b. Scheduling.

c. Duration.

d. Sleep aids.

(Refer to Paragraph 10.4, Crew Quarters, for information on facilities to support sleep.)

7.2.4.2 Sleep Design Considerations

{A}

The following are considerations to be made when establishing a space module sleep schedule and facility in a microgravity environment.

a. Effects of Microgravity - The results of Skylab experiments do not show any major adverse changes in sleep as a result of prolonged space flight. Only during the 84 day flight did one subject experience any real difficulty in terms of sleep time. Even then, the problem diminished with time, although sleeping medication was required on occasion. The most significant changes occurred in the postflight period, with alterations more of sleep quality than quantity. It appears that readaptation to a 1-G environment is more disruptive to sleep than the adaptation to microgravity. In all, the Skylab investigators feel that adequate sleep can be obtained in a microgravity environment providing adequate sleeping areas are used, noise levels are minimized, and a familiar time reference for the sleep period is used.

b. Duration of Sleep - Satisfactory psychological performance is dependent upon an adequate sleep/wakefulness cycle, but few studies have been done to determine the optimum number of hours of sleep required per hours of waking time. The usual study has investigated the amount of sleep spontaneously taken per day without regard to performance. It has not been demonstrated at this point whether humans need 6 to 8 hours of sleep in every 24. On the short side, the quality of afternoon performance improves almost linearly as sleep duration is increased from 1 to 6 hours. Beyond a duration of 6 hours of sleep, improvement is less marked and is completely absent when sleep is lengthened from 8 to 10 hours in every 24.

c. Sleep/Work Cycle - The following factors must be considered about sleep/work cycles:

1. Personnel exposed to changes in environmental cues will show disrupted circadian rhythms.

2. Circadian rhythms significantly affect a wide variety of human functions in addition to sleep, including psychomotor and cognitive performance, mood, and social adaptability.

3. Careful planning of activity schedules, sleep/wake schedules, and artificial control of environmental cues may be necessary to offset the possible negative impact of circadian desynchronization on crew performance and adjustment.

4. Sleep periods should be proceeded by at least 1 hour of nondemanding mental activity.

7.2.4.3 Sleep Design Requirements

{A}

The following are design requirements for crew sleep:

a. Facilities - Adequate sleep facilities shall be provided.

(Refer to Paragraph 10.4, Crew Quarters, for sleep facility design requirements.)

b. Duration - Scheduling should allow a minimum sleep period of 8 hours per day with minimum of 6 hours of uninterrupted sleep.

c. Pharmaceuticals - Appropriate sleep aid medication shall be made available to crewmembers via a controlled access system.

7.2.5 Personal Hygiene

{A}

7.2.5.1 Introduction

{A}

This section on personal hygiene includes the functional considerations and requirements for maintaining proper personal hygiene during a space mission.

(Refer to Paragraph 10.2, Personal Hygiene, for information on facilities supporting personal hygiene.)

7.2.5.2 Personal Hygiene Design Considerations

{A}

Personal hygiene is important to both the psychological and physiological well being of the crew. The following are considerations for ensuring a proper personal hygiene program:

a. Facilities - Facilities for performing personal hygiene functions must be properly sized and accessible.

b. Equipment, Supplies, and Clothing - Personal hygiene equipment and supplies and crew clothing must accommodate the physiological differences in male and female crew members in the microgravity environment. The hardware should make this accommodation with as few interchangeable components as possible. The supplies and clothing should also be able to meet the personal tastes and needs of the crew members to the extent possible in the space module environment.

c. Training - Crewmembers must be adequately trained and familiar with both personal hygiene equipment and procedures.

d. Scheduling - Proper scheduling must be provided to allow adequate time for personal hygiene.

e. Personal Hygiene Standards - Personal hygiene standards should be established prior to the start of the program.

7.2.5.3 Personal Hygiene Design Requirements

{A}

7.2.5.3.1 Body Grooming Design Requirements

{A}

The following body grooming measures shall be provided in the space modules.

a. Skin Care - The capability shall be provided for crewmembers to condition their skin sufficiently to prevent drying and/or cracking.

b. Shaving - Provisions shall be made for crewmembers to shave body hair.

c. Hair Grooming - Provisions shall be made for crewmembers to cut hair to maintain the length within mission and/or personal requirements.

d. Nail Care - Provisions shall be made for crew members to trim nails.

e. Body Deodorant - The capability shall be provided for crewmembers to control body odor.

f. Menstruation - Provisions shall be provided for the collection and disposal of menstrual discharge.

(Refer to Paragraph 10.2.3.4, Hair Cutting Design Requirements, and Paragraph 10.2.3.5, Grooming & Shaving Design Requirements, for facility design requirements.)

7.2.5.3.2 Partial Body Cleansing Design Requirements

{A}

The capability shall be provided for crewmembers to perform selected body area cleansing as needed.

(Refer to Paragraph 10.2.3.1, Partial Body Cleansing Design Requirements, for facility design requirements.)

7.2.5.3.3 Oral Hygiene Design Requirements

{A}

The capability shall be provided for crewmembers to maintain proper oral hygiene. Proper oral hygiene includes tooth, mouth, and gum care.

Water for oral hygiene shall meet potable water quality standards defined in Paragraph 7.2.2.3.2.1.

(Refer to Paragraph 10.2.3.3, Oral Hygiene Design Requirements, for facility design requirements.)

7.2.5.3.4 Whole Body Cleansing Design Requirements

{A}

The capability shall be provided for crewmembers to perform whole body skin and hair cleansing.

(Refer to Paragraph 10.2.3.2, Whole Body Cleansing Design Requirements, for facility design requirements.)

7.2.5.3.5 Personal Clothing & Equipment Cleansing Design Requirements

{A}

The capability shall be provided to supply each crewmember with clean clothing and other washable items, including bedding and linens, over the duration of the mission.

(Refer to Paragraph 11.13.1.3, Clothing Design Requirements, and Paragraph 10.10.3, Laundry Facility - Design Requirements, for additional requirements.)

7.2.5.3.6 Personal Hygiene Water Design Requirements

{A}

Personal hygiene water is water that is used for external body cleansing. Personal hygiene water requirements are listed below:

a. Quality - Minimum personal hygiene water quality requirements are given in Figure 7.2.5.3.6-1.

b. Quantity - Personal hygiene water quantity requirements are given in Figure 7.2.5.3.6-2. This figure does not include requirements for laundry and dishwashing which are system dependent.

c. Temperature - Temperature shall be adjustable from 21 +/- 4 °C (70 +/- 10 °F) to a maximum of 45°C (113°F).

7.2.6 Pre/Post-Mission Health Management

{A}

7.2.6.1 Introduction

{A}

This section specifically addresses the health management of the crewmembers before and after the mission. The other paragraphs of Sections 7.0, Health Management, deal primarily with health management during the mission.

QUALITY PARAMETERS	LIMITS
PHYSICAL PARAMETERS	
Total solids (mg/l)	500
Color True (Pt/Co units)	15
Taste (TTN)	N/A
Odor (TON)	3
Particulates (max size - microns)	40
pH	5.0-8.5
Turbidity (NTU)	1
Dissolved Gas (free @ 37°C)	N/A
Free Gas (@ STP)	Note 1
INORGANIC CONSTITUENTS (mg/l) (See Notes 2 and 5)	
Ammonia	0.5
Arsenic	0.01
Barium	1.0
Cadmium	0.005
Calcium	30
Chlorine (Total - Includes Chloride)	200
Chromium	0.05
Copper	1.0
Iodine (Total - Includes Organic Iodine)	15
Iron	0.3
Lead	0.05
Magnesium	50
Manganese	0.05
Mercury	0.002
Nickel	0.05
Nitrate (NO_3-N)	10
Potassium	340
Selenium	0.01
Silver	0.05
Sulfate	250
Sulfide	0.05
Zinc	5.0
BACTERICIDE (mg/l)	
Residual Iodine (minimum)	0.5
Residual Iodine (maximum)	6.0
AESTHETICS (mg/l)	
Cations	N/A
Anions	N/A
CO_2	N/A

MSIS412a
Rev. B

Figure 7.2.5.3.6-1 Hygiene Water Quality Requirements (Maximum Contaminant Levels) (Continued)

QUALITY PARAMETERS	LIMITS
MICROBIAL	
Bacteria (CFU/100 ml)	
Total Count	1
Anaerobes	1
Coliform	1
Virus (PFU/100 ml)	1
Yeast & Mold (CFU/100 ml)	1
RADIOACTIVE CONSTITUENTS (pCi/l)	Note 3
ORGANIC PARAMETERS (ug/l) (See Note 2)	
Total Acids	500
Cyanide	200
Halogenated Hydrocarbons	10
Total Phenols	1
Total Alcohols	500
Total Organic Carbon (TOC)	10,000
Uncharacterized TOC (UTOC) (ug/l) (See Note 4)	1,000
ORGANIC CONSTITUENTS (mg/l) (See Notes 2 & 5)	

MSIS 412b REV. A

Reference: 278
With Updates

Notes:

1 No detectable gas using a volumetric gas vs. fluid measurement system. Excludes CO_2 used for aesthetic purposes.

2 Each parameter/constituent MCL must be considered individually and independently of others.

3 The maximum contaminant levels for radioactive constituents in potable and personal hygiene water shall conform to Nuclear Regulatory Commission (NRC) regulations (10CFR20, et al.). These maximum contaminant levels are listed in the Federal Register, Vol. 51, No. 6, 1986, Appendix B, as Table 2 (Reference Level Concentrations) Column 2 (Water). Control/containment/monitoring of radioactive constituents used on SSF shall be the responsibility of the user. Prior to the introduction of any radioactive constituents on SSF, approval shall be obtained from the Radiation Constraints Panel (RCP). The RCP will approve or disapprove proposed monitoring and decontamination procedures on a case-by-case basis.

4 UTOC equals TOC minus the sum of analyzed organic constituents, expressed in equivalent TOC.

5 In the event a quality parameter not listed in this table is projected, or found, to be present in the reclaimed water, the Water Quality Manager from Man Systems shall be contacted for a determination of the MCL for that parameter.

MSIS-412c Rev. B

Figure 7.2.5.3.6-1 Hygiene Water Quality Requirements (Maximum Contaminant Levels) (Completed)

MODE			
UNITS	Operational	90 dAY Degraded [1]	Emergency [3]
lb/ person-day	51.5[2]	16.0[4]	12 0[5]
kg/ person-day	23.4	8.18	5.45

Reference: 278
With Updates

MSIS400 Rev. B

1. Degraded levels meet "fail operational criteria".
2. Based on 12-lb minimum capacity for hygiene and 25 lb used in a 90-day chamber test. Includes laundry (27.5 lb/person-day) and dishwashing (12 lb/person-day) quantities.
3. Based on 12 lb/person-day) capacity for hygiene and 4 lb/person-day for laundry.
4. Based on 12 lb/person-day minimum capacity for hygiene only.

Figure 7.2.5.3.6-2 Minimum Personal Hygiene Quantity Requirements

7.2.6.2 Pre/Post-Mission Health Management Design Considerations

{A}

Pre- and post-mission measures can be taken to promote the health of the crewmembers and to increase the chance of a successful mission. The measures are:

a. Crewmember Selection - Health criteria should be established to minimize the chances of illness and injury that would result in a loss of investment in training or a decrement in mission success. Required physical and psychological aptitudes and abilities of the crew can be established through careful analysis of the anticipated tasks to be performed during the mission.

b. Pre-Mission Health Stabilization - A health stabilization program that includes monitoring must be in place during the preparatory stages of the mission. Particularly important are immunization and exposure protection against those diseases that could become overt during the mission.

c. Pre-Mission Health Training - The goal of this training is to familiarize the crewmembers with the objectives and modalities of the health maintenance system including the methods of monitoring to be implemented.

d. Post-Mission Gravitational Readaptation - Readaptation to a 1-G environment varies by physiological system as shown in Figure 7.2.6.2-1. The health care, monitoring, and support for readaptation must consider these factors.

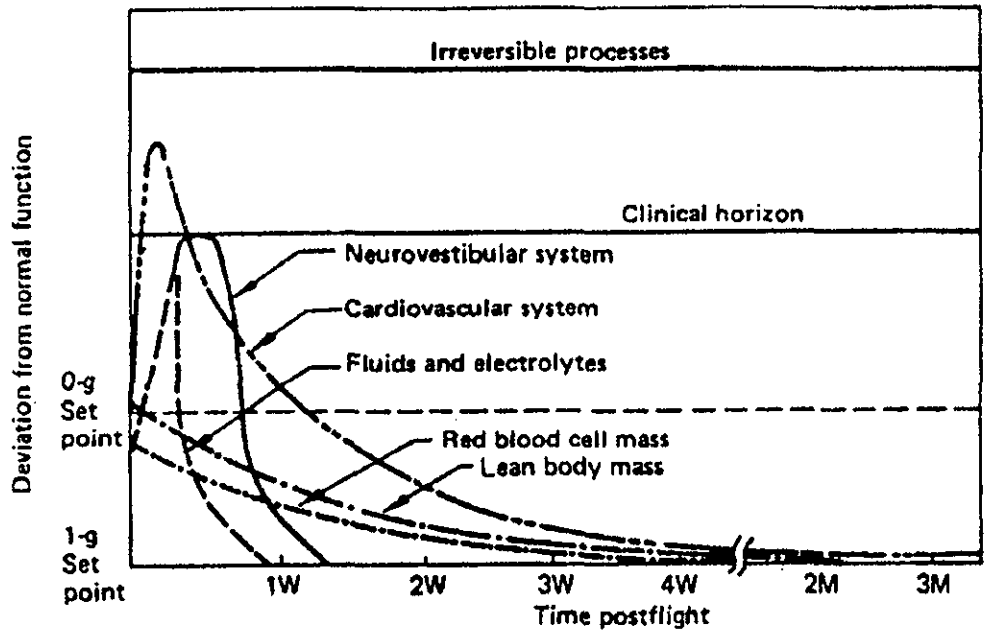

Reference: 208, Figure 2, page 135

Note:
W = Week
M = Month

MSIS-192

Figure 7.2.6.2-1. Time Course of Physiological Shifts During Readaptation to 1-G

7.2.6.3 Pre/Post-Mission Health Management Design Requirements
{A}

The following pre and post-mission health care management programs shall be provided:

a. Pre-Mission Health Management - Crew selection and training, and health stabilization programs shall be conducted to:

1. Minimize the possibility of a health problem that would keep a trained crewmember from going on a mission.

2. Minimize the threat of mission decrement due to a health problem.

b. Post-Mission Health Management - Post-mission health care shall be provided to minimize the chance of illness or injury to the crewmember due to his or her deconditioned state.

7.2.7 Health Monitoring
{A}

7.2.7.1 Introduction
{A}

This section addresses the monitoring measures necessary to evaluate the health of the crewmembers and the health safety of the space module environment. This section discusses only monitoring of crew health and water quality. Other sections of this document monitoring requirements for the space module environment. These other sections are referenced in the appropriate paragraphs.

7.2.7.2 Routine Health Monitoring Design Considerations
{A}

7.2.7.2.1 Routine Crew Health Monitoring Design Considerations
{A}

The following are considerations for establishing a crew health monitoring program:

a. Record Keeping - The results of all crew health monitoring must be kept in a permanent and easily retrievable format for trend analysis. There must a simple and rapid way to communicate the data to the ground. The method for handling, storing, and transmission of crew members medicine health records must be totally secure.

b. Standards - Standards defining nominal limits of the monitored parameters and procedures for handling health problems (treatment, consultation, rescue, mission abort, etc.) must be clearly defined and available to responsible space module crewmembers.

c. Frequency of Monitoring - There should be an increased frequency of health monitoring at the beginning and the end of the mission compared with a baseline frequency during the middle of the mission. This is due to the effect of environmental changes on both the space module and the crew.

7.2.7.2.2 Water Quality Monitoring Design Considerations
{A}

The water supply characteristics, mission duration, anticipated hardware lifetime, and rescue opportunities for long-term space missions are unlike those encountered in any terrestrial application or previous manned space program. These characteristics introduce a variety of hazards which dictate the need for unique water quality requirements, monitoring, capabilities for quality maintenance and restoration, and novel technologies to enable these activities.

7.2.7.2.2.1 Toxicological Monitoring Design Considerations
{A}

The following are considerations for toxicological monitoring of the water supply:

a. Water Recycling - To avoid the severe launch or resupply penalties associated with ground-supplied water, long missions will incorporate a system to recycle water. Sources for the reclaimed water include cabin humidity condensate, spent wash water, and urine. Crewmembers will be exposed to reclaimed water in metabolic, personal hygiene, and housekeeping activities. Of particular impact will be the water-soluble volatile and nonvolatile contaminants from the waste, humidity, and condensate collection systems.

b. Conventional Systems - The maximum allowable concentration limits for many inorganic chemicals in potable water are below those which could be detected by conventional process control and screening analyses, such as conductivity and pH measurements.

c. Chronic Exposure Considerations - Water recycling introduces the potential for repeated exposure to metabolically active contaminants and increases the potential in reclamation and disinfection processes for chemical derivatization of innocuous constituents into toxic products, such as organohalides. Long missions and continuous habitation will necessitate that the effects of chronic exposure be considered along with acute toxicity.

d. Prediction of Toxins - Because toxicant incidence and abundance vary among different wastewater reclamation techniques, and since the composition of the source wastewater is highly variable, it is difficult to define the composition of product water. Of particular concern is the organic content of the reclaimed water.

e. Total Organic Carbon - Because of the variety and variability of organics reclaimed water, Total Organic Carbon (TOC) will be a critical surrogate measurement required for potability verification, process control, and hygiene quality determination.

f. Exposure Limits - The establishment of exposure limits for the wide variety of organics found in reclaimed water is a problem of enormous magnitude. Exposure limits, for the most part, do not exist for organics that have been identified in reclaimed water because these chemicals do not correspond to those (such as pesticides, petroleum products, industrial wastes, and urban and agricultural runoff) encountered in terrestrial water.

g. System Breakdown - The long system life inherent in long-term missions increases the potential for accumulation of toxic contaminants, for system failures and malfunctions, and for contributions to the overall contaminant burden by degradation of system materials.

h. Stainless Steel - Although stainless steel was successfully used to fabricate the STS water system, long-duration mission hardware life requirements may preclude its use.

i. Impact of Experiments and Process - Biological and industrial experiments and processes to be conducted on long-duration space missions constitute another potential and undefined source of contamination for the water system and increase the variability of the source water.

7.2.7.2.2.2 Microbiological Monitoring Design Considerations {A}

Even in high quality water supplies protected by a residual bactericide, viable organisms can still persist. Therefore, the potential for microbial overgrowth is an ever-present hazard. The following are considerations for microbiological monitoring:

a. Water Recycling - In reclaimed systems, the potential exists for introduction of microorganisms into the system in greater

numbers and variety than in conventional or previously used water systems.

b. Use of Coliforms - Coliforms, the conventional indicator organism group for terrestrial potable water, is not an adequate indicator of total microbial acceptability for aerospace water systems.

c. Disinfectant-Resistant Forms - Recycling of water introduces the potential for circulating pathogenic or opportunistics organisms, and increases the potential for selection of disinfectant-resistant microbiological species.

d. Previous Systems - Previous spacecraft water systems have been required to maintain throughout the potable water system and have successfully met this requirement.

e. Time Considerations - If any viable organisms are detected, one is immediately faced with the task of identification to assess the potential impact of the particular species. Since medical requirements preclude crew use of space module water until its quality has been verified, routine identification would impose additional delays before reclaimed water could be used.

f. System Maintenance/Reliability - Quality maintenance of the long-term mission water systems will require careful materials selection to preclude adverse deterioration over the expected operation of the system, the maintenance of a continuous residual bactericide downstream of the reclamation process(es), and a method of restoring system integrity in the event of system malfunction or contamination.

g. Biofilm Potential - The projected long term use of the water distribution system will favor the development of biofilms within the system. These films can harbor organisms and protect them from the residual bactericide. The resulting microbial contamination or microbial growth products in the water must be prevented.

7.2.7.2.2.3 Physical Monitoring Design Considerations

{A}

A variety of physical properties are readily measured in conventional laboratories to determine the quality of water supplies. These parameters include properties which have direct effects on water acceptability and those which are indicative of other undesirable conditions. The following are considerations for physical monitoring of the water supply:

a. Color - consumer rejection because of its effect on aesthetic quality and is indicative of contaminants.

b. Taste and Odor - evaluations that rely on the human sensory apparatus. Acceptability of the taste of potable water is important to both the psychological well-being and the physiological health of the crew. Potable water provided on previous U.S. manned space flights has been characterized as tasteless and undesirable. The flat taste of this water is probably a direct result of its high quality analogous to triple distilled water. In order to meet maximum concentration limits of potential toxicants, reclaimed water will have a similar tasteless quality unless additives are provided to enhance flavor. At times when bactericide overdosage has occurred, crews have indicated objectionable taste.

c. Turbidity - "Turbidity" is an indicator of particulate contamination which may be living or nonliving material. Excessive nonliving particulate material interferes with disinfection and can cause consumer rejection for aesthetic reasons. Large particles can harbor microorganisms in their interior.

d. Other Physical Parameters - Temperature, conductivity, and pH are other collective physical parameters which affect acceptability of water. These physical properties may be quite easy to measure and provide rapid, on-line information about the quality of the water.

7.2.7.3 Routine Health Monitoring Design Requirements

{A}

7.2.7.3.1 Routine Crew Health Monitoring Design Requirements

{A}

The space module shall have the following routine crew health monitoring capabilities:

a. Routine Diagnostic Physical Examination - The capability for conducting routine diagnostic physical examination of the crewmembers shall be provided on all long-term missions (in excess of two weeks).

(Refer to Paragraph 10.9.3.11.2, Routine Diagnostic Exam - Design Requirements, for equipment required for routine physical examination.)

b. Monitoring During Exercise - Requirements for physiological monitoring of the crew member during exercise are defined in Paragraph 7.2.3.3.3, Exercise Countermeasure Design Requirements.

(Refer to Paragraph 10.8.3.2, Countermeasure Monitoring Design Requirements, for facilities and equipment for monitoring during exercise.)

c. Pre- and Post-Mission Health Monitoring - Requirements for physiological monitoring before and after mission are defined in Paragraph 7.2.6.3, Pre- and Post-Mission Health Management - Design Requirements.

7.2.7.3.2 Water Quality Monitoring Design Requirements

{A}

The capability to detect, differentiate, and warn the crew as necessary to maintain crew health for selected contaminants in the space module water supply by real-time or near-real-time monitoring shall be provided.

The capability to disinfect/sanitize the water system shall be provided.

The following water quality monitoring requirements apply to all space module water that comes into direct contact with personnel (through ingestion, personal hygiene, housekeeping, etc.).

7.2.7.3.2.1 Water Quality Monitoring Schedule Design Requirements

{A}

Water quality shall be monitored according to the schedule shown in Figure 7.2.7.3.2.1-1.

7.2.7.3.2.2 Chemical Monitoring Design Requirements

{A}

The following requirements apply to monitoring of chemical contaminants in water:

a. Definition of Contaminants - A capability to monitor chemical contaminants in the space module reclaimed water shall be provided. Requirements for water quality monitoring of chemical contaminants are included in Figure 7.2.7.3.2.1-1.

b. Direct measurement - When necessary, organics and inorganics shall be monitored directly (not through a surrogate).

c. When required, exposure limits shall be established for organics and inorganics on an individual basis.

PARAMETER	ON-LINE[1] POT	ON-LINE[1] HYG	OFF-LINE[2] POT	OFF-LINE[2] HYG
Physical				
Total Solids	-	-	-	-
Color	-	-	+	+
Conductivity	X	X	X	X
Taste & Odor	-	-	+	+
Particulates	-	-	+	+
pH	X	X	X	X
Temperature	X	X	X	X
Turbidity	TBD	TBD	+	+
Dissolved Gas	-	-	+	-
Free Gas	-	-	+	-
Inorganics				
Ammonia	-	-	+	+
Iodine	X	X	X	X
Specific Inorganics[3]	-	-	+	+
Aesthetics				
Specific Contributors[4]	-	-	+	+
Microbial				
Bacteria				
Total Count	-	-	X	X
Anaerobes	-	-	+	+
Coliform	-	-	-	-
Virus	-	-	-	-
Yeast & Mold	-	-	-	-
Microbe ID[5]	-	-	X	X
Radionuclides[6]	-	-	X	X
Organics				
TOC	X[7]	X[7]	X	X
Specific Organics	-	-	+	+

MSIS417a
Rev. B

Reference: 351
With Updates
Notes for this Figure are on the following page

Figure 7.2.7.3.2.1-1 Required Water Quality Monitoring Schedule For All Water Which Comes Into Contact With Personnel

Notes for Figure 7.2.7.3.2.1-1

X Denotes that monitoring is required.

- Denotes that monitoring is not required.

+ Denotes that this monitoring requirement will be waived if verification testing and analysis indicate that the respective quality parameter limit will be reliably met.

1 Analysis of these process stream samples will be performed to provide real time or near real time results for process control and presumptive water quality assessment. Requirements for on-line monitoring of additional parameters will be established if verification testing and analysis indicates that such monitoring is required for process control or water quality assessment.

2 Product water samples from the water systems will be analyzed off-line for confirmation of water quality. The continued operation of the ECLSS and the use of the water will not necessarily be contingent upon the availability of the analyses once the water systems are verified as being operational. In addition to the on-line and off-line analyses, grab samples from the water systems will be obtained for ground, post-mission analysis.

3 Specification of organic and inorganic elements and compounds to be monitored will be based on the potential for their being present in the product water and their toxicity. In the event a parameter not listed in this table is projected, or found, to be present in the reclaimed water, the Water Quality Manager, JSC will be contacted for a determination of the monitoring requirements.

4 Selection will be based on determination of critical aesthetic parameters.

5 This does not include identification of viruses.

6 Inflight monitoring capability will be provided by the specific experiment or procedure utilizing radionuclides.

7 Analytical procedure may provide an indirect equivalent of classical TOC.

MSIS417b
Rev. B

7.2.7.3.2.3 Microbiological Monitoring & Treatment Design Requirements

{A}

The following requirements apply to monitoring and treatment of microbiological qualities of water:

a. Determination of Potability - Capability shall be provided to support real-time decisions on water potability if organisms are detected.

b. Sampling Technique - Water sampling techniques shall preclude contamination by the operator during sampling.

c. Iodine - Iodine shall be used as the primary agent to maintain water microbiological quality

d. Alternative Microbial Control - On long-term missions when there is a potential for development of organisms resistant to iodine, an alternative microbial control technique shall be provided.

e. Recovery from Microbial Overgrowth - Provisions shall be made to recover potable and hygiene water microbial control in the event of overgrowth using processes that will not degrade the quality of water with respect to other parameters.

7.2.7.3.2.4 Physical Monitoring Design Requirements

{A}

Equipment shall be provided to meet the physical and aesthetic water quality monitoring requirements identified in Figure 7.2.7.3.2.1-1.

7.2.7.3.3 Environmental Monitoring Design Requirements

{A}

Environmental monitoring necessary to maintain crew health shall be provided as follows:

a. Particulate Monitoring - The capability to detect, differentiate, and warn the crew as necessary to maintain crew health for selected particulate contaminants in the space module by real-time or near-real-time monitoring shall be provided.

b. Microbial Contaminants Monitoring - The capability to monitor, detect, identify, quantitate, and warn the crew as necessary to maintain crew health for selected microbial contaminants in the space module by real-time or near-real-time monitoring, including selected internal surfaces, shall be provided.

(Refer to Paragraph 5.7.2.2.3, Ionizing Radiation Monitoring and Dosimetry Design Requirements, for ionizing radiation monitoring. Refer to Paragraph 5.7.3.2.2, Non-Ionizing Radiation Protection Design requirements, for non-ionizing radiation monitoring requirements.)

c. Chemical Contaminants Monitoring - The capability to detect, differentiate, and warn the crew as necessary to maintain crew health for specific chemical contaminants in the space module by real-time or near-real-time monitoring shall be provided.

d. Ionizing Radiation Monitoring - Refer to Paragraph 5.7.2.2.3, Ionizing Radiation Monitoring and Dosimetry Design Requirements for ionizing radiation monitoring.

e. Non-ionizing Radiation Monitoring - Refer to Paragraph 5.7.3.2.2, Non-ionizing Radiation Protection Design Requirements for non-ionizing radiation monitoring requirements.

f. Atmospheric Monitoring - Refer to Paragraph 5.1.3.4, Atmosphere Monitoring and Control Design Requirements, for atmosphere monitoring requirements.

The capability to decontaminate contaminated areas shall be provided. (See Section 5.1.3)

7.2.8 Biological Payloads
{A}

Biological payloads must meet the specific pathogen-free criteria as defined by the Human Research Policy and Procedures for Space Flight Investigations HRPPC) guidelines, JSC 20483. Basic environmental design requirements and acceptability limits shall minimize infectious agents, conditions, and cross contamination between the crew and biological payloads (animals, plants, etc.) that may impact crew health and mission requirements.

7.3 MEDICAL CARE
{A}

7.3.1 Introduction
{A}

This section presents the minimum functional requirements for a space medical care facility.

(The equipment and facilities for implementing these medical care requirements are discussed in Section 10.9, Space Medical Facility.)

7.3.2 Medical Care Design Considerations
{A}

7.3.2.1 Objectives of Medical Care Design Considerations
{A}

A space medical care facility should meet the following objectives:

a. Ensure health and safety (ensure crew safety and optimal health during routine operations).

b. Prevent excess mortality and morbidity.

c. Prevent mission termination (prevent early mission termination due to medical contingency).

d. Prevent an unnecessary rescue (provided rescue is a possibility).

e. Increase the probability of success of a necessary rescue (provided rescue is a possibility).

7.3.2.2 Anticipated Illness and Injuries Design Considerations
{A}

The exact nature of the required medical care depends on the space mission (the mission duration and goal) and the illness and injuries that are expected to occur in that mission. The characteristics of the illness and injuries that are particularly important for design consideration are listed below:

a. Probability of Disease or Injury Occurrence - This can be determined through historical data and analysis of the nature of the mission tasks (some tasks are more likely to cause specific injuries). It must be remembered that selection and premission monitoring can screen out many potential illness.

b. Time for a Disease to Become Overt - If a disease has a long incubation or development period relative to the space mission, then diagnosis and treatment during the mission becomes less important. However, should the disease have a short incubation, then diagnosis and treatment become very important. Therefore, it is imperative that means be available to determine the presence of these diseases and treat them.

c. Disability Level of the Ill or Injured Crewmember - Should a crewmember become ill or injured, the seriousness of the illness or injury must be determined in order to make adjustments in workload schedules, etc. The space module must have effective diagnostic and preventive measures against diseases and injuries that would seriously disable the crew member.

d. Recuperation Period - The medical facility must have effective diagnostic and preventive measures against diseases and injuries that would disable the crewmember for an extended period. Should a crewmember require a lengthy recuperation period, particularly if isolation is necessary, mission planning would require modification to accommodate the situation. In addition, provision for recuperation in the medical facility must be provided.

e. Probable Results of Partial or No Treatment - The medical facility must primarily be prepared to handle those illness and injuries which would heal more rapidly with treatment or which would become serious without treatment.

7.3.2.3 Earth - versus Space-Based Medical Care Design Considerations

{A}

The administration of medical care requires a combination of ground support and the skills and facilities of the crewmembers. Longer space missions and longer rescue delays require more reliance on the skills and resources of the crewmembers themselves. The following are considerations which effect the medical facility design and the training of the crew:

a. Earth-Based Medical Care - Past space missions have been monitored continuously by an Earth-based Flight Control Team, which includes medical personnel as team members. With this system, the medical team obtains health-related information via spacecraft telemetry. This is supplemented through use of a private medical conference, as necessary, with the crew. The information obtained during monitoring is intended to deal with direct medical problems and also to evaluate circumstances that appear to be leading toward such problems. This information includes data concerning status of environmental control systems, radiation exposure, food supply, water condition, and personal hygiene.

b. Space-Based Medical Care - Medical support of future space operations will require new philosophies and new technologies. The epicenter of medical care will shift from ground-based Mission Control Centers to a space-based medical unit. The minimum projected time for arrival of a rescue vehicle is mission dependent; in fact, rescue may be unavailable altogether (such as on a Mars mission). In addition to the delay factor, there also is the issue of establishing medical criteria for committing a patient to entry into a 1-G environment, following extended exposure to microgravity, without endangering his or her condition. These considerations mean that future space modules must have the personnel, facilities, and technologies to provide adequate medical care and health maintenance services, including provision for such microgravity or partial gravity countermeasures as specially tailored exercise programs.

c. Human Engineering of Medical Facility - Proper human engineering of the space medical facility can increase the effectiveness of the medical system and decrease the requirement for extensive crew training. Information in the remainder of this document (particularly Section 10.9 Space Medical Facility, and Section 9.0, Workstations) should be used as the basis for the design of all medical facilities.

7.3.3 Medical Care Design Requirements

{A}

7.3.3.1 General Design Requirements

{A}

A space module shall have a medical facility which can effectively provide preventive, diagnostic, and therapeutic medical capabilities in accordance with U.S. clinically acceptable current

and anticipated medical practice standards.

(Refer to Section 10.9, Space Medical Facility, for information about the design of the medical facility.)

7.3.3.2 Prevention Design Requirements

{A}

The space medical facility shall be capable of supporting the administration of preventive medical care as defined in Paragraph 7.2, Preventive Care.

7.3.3.3 Diagnostic System Design Requirements

{A}

The space medical facility shall be capable of supporting diagnosis of anticipated illness and injuries, assessment of their degree and severity, and the tracking of the overall health status of ill or injured crewmembers.

7.3.3.4 Treatment (Therapeutics) Design Requirements

{A}

The space medical facility shall be capable of supporting various therapeutic measures:

a. Treatment - The capability shall exist to treat a crewmember for anticipated diseases and injuries.

b. Stabilization - The capability shall exist to stabilize a critically ill crewmember until transportation to an appropriate facility is available. In the event an illness or injury is not treatable at the module.

c. Handling of Deceased Crewmember - The capability shall exist to handle a deceased crewmember in an efficient, safe, and acceptable manner.

7.4 CREW SURVIVAL

{A}

7.4.1 Introduction

{A}

7.4.2 Crew Survival Design Considerations

{A}

7.4.3 Crew Survival Design Requirements

{A}

a. The emergency vehicle shall be designed to preclude hazard to the crew and to allow egress from the crashed vehicle in the event of off nominal landing loads specified below in Figure 7.4.3-1.

b. Equipment and attachment structures inside the crew compartment (including fittings and fasteners) shall be designed for off nominal landing loads specified below in Figure 7.4.3-1.

Nx	Ny	Nz
20.0	3.3	10.0
-3.3	-3.3	-4.4

V6 473

Note: These load factors shall act independently and the longitudinal load factor shall be directed within 20° of the longitudinal axis.

Figure 7.4.3-1 Ultimate Inertia Load Factors

7.4.3.1 Medical Kit Design Requirements

{A}

The emergency vehicle shall provide an emergency medical kit listed in Figure 7.4.3.1-1.

7.4.3.2 Crew Survival Kit Design Requirements

{A}

The emergency vehicle shall provide survival equipment listed in Figure 7.4.3.2-1.

Airway	
Oral airway	Min. of 4
Tracheal tube w/atylet	Min. of 2
Laryngoscope	1
Pertrach Kit	1
Comox resuscitator	1
Ambu Bag	
Antiseptics	
Alcohol wipes	
Bandages	
Ace Bandage	
Bandaids	
Kling	
Sponges	
Telfa pads (4 X 4s)	
Wound pack	
Burns	
Silvadene cream (silver sulfadiazine)	
Decongestants	
Afrin nasal spray	1 bottle
Diagnostic Equipment	
Blood Pressure cuff	
Stethoscope	
Eye Treatment	
Tearisol eye drops (artificial tears)	
Motion Sickness	
Phenergan, oral	
Scop/Dex	
Pain Medications	
Ascriptin (aspirin)	
Tylenol (acetaminophen w/codeine)	
Miscellaneous	
Scissors	
Tweezers	
Tape (generic adhesive - medical)	
Steri-Strip skin closure	
Penlight	

Figure 7.4.3.1-1 Emergency Vehicle Medical Kit

MSIS 472
Rev. B

ITEM	BOTH	LAND ONLY	WATER ONLY
Water (2 liter/person)	2 liter/person		
Day/night flare	2		
Thermal blanket (large)	2		
Chem lights	10		
Strobe light	1		
Pen gun flares	1 gun, 14 flares		
First aid kit	1		
PRC-112 radio (kit)	1		
Signal mirror	1		
Knife	1		
Sunscreen	1		
Compass	1		
Whistle	1		
Penlight	2		
SARSAT Beacon	1		
Motion sickness pills			In first aid kit
Sea dye marker			4
Life raft			1 crew raft
Matches		10	
Fire starter kit		2	

MSIS471
Rev. B

Figure 7.4.3.2-1 Emergency Vehicle Proposed 24 Hour Survival Kit (Post-landing)

Table of Contents

		Page
8.0	**ARCHITECTURE**	**8-1**
8.1	**INTRODUCTION**	**8-1**
8.2	**OVERALL ARCHITECTURAL CONSIDERAITONS AND REQUIREMENTS**	**8-1**
8.2.1	Introduction	8-1
8.2.2	Overall Architectural Design Considerations	8-1
8.2.2.1	Microgravity Design Considerations	8-1
8.2.2.2	Multipurpose Use of Volume Design Considerations	8-1
8.2.2.3	Physical Dimensions of Crewmembers Design Considerations	8-2
8.2.2.4	Module Layout and Arrangement Design Considerations	8-2
8.2.2.5	Crew Station Location	8-2
8.2.2.6	Microgravity	8-3
8.2.2.7	Reconfiguration	8-3
8.2.2.8	Decor and Lighting	8-3
8.2.3	Overall Alchitectural Design Requirements	8-3
8.2.3.1	Crew Station Arrangement and Grouping Design Requirements	8-3
8.2.3.2	Dedicated vs. Multipurpose Space Station Design Requirements	8-3
8.3	**CREW STATION ADJACENCIES**	**8-4**
8.3.1	Introduction	8-4
8.3.2	Crew Station Adjacencies Design Considerations	8-4
8.3.2.1	General Adjacency Design Considerations	8-4
8.3.2.2	Specific Adjacency Design Considerations	8-5
8.3.3	Crew Station Adjacencies Design Requirements	8-7

8.3.3.1	Adjacent Crew Station Design Requirements	8-7
8.3.3.2	Non-Adjacent Crew Stations Design Requirements	8-7
8.4	**COMPARTMENT AND CREW STATION ORIENTATION**	**8-7**
8.4.1	Introduction	8-7
8.4.2	Orientation Design Considerations	8-7
8.4.3	Orientation Design Requirements	8-8
8.4.4	Example Orientation Design Solutions	8-8
8.5	**LOCATION CODING**	**8-9**
8.5.1	Introduction	8-9
8.5.2	Location Coding Design Consideration	8-9
8.5.2.1	Users of A Location Coding System Design Considerations	8-9
8.5.2.2	Location Coding System Implementation Design Considerations	8-10
8.5.3	Location Coding Design Requirements	8-10
8.5.3.1	Alphanumeric Coding Design Requirements	8-10
8.5.3.2	Directional Designation Design Requirements	8-10
8.5.3.3	Location & Orientation By Color Coding Design Requirements	8-11
8.5.3.4	Location Coding With Placards Design Requirements	8-11
8.6	**ENVELOPE GEOMETRY FOR CREW FUNCTIONS**	**8-12**
8.6.1	Introduction	8-12
8.6.2	Envelope Geometry Design Considerations	8-12
8.6.2.1	Mission Duration Design Considerations	8-12
8.6.2.2	Visual Design Considerations	8-13
8.6.2.3	Body Envelope Design Considerations	8-14

8.6.2.4 Social Design Considerations 8-16

8.6.3 Envelope Geometry Design Requirements 8-16

8.6.3.1 Crew Station Body Envelopes Design Requirements 8-16

8.6.3.2 Total Module Habitable Volume Design Requirements 8-16

8.6.4 Example Volume Allocations Design Solutions 8-17

8.6.4.1 Skylab Food Management Compartment 8-17

8.6.4.2 Skylab Sleep Compartment 8-18

8.6.4.3 Skylab Waste Management and Personal Hygiene Compartments . 8-18

8.7 TRAFFIC FLOW 8-18

8.7.1 Introduction 8-18

8.7.2 Traffic Flow Design Considerations 8-19

8.7.2.1 Optimization of Traffic Flow Design Considerations 8-19

8.7.2.2 IVA Translation Rates Design Considerations 8-20

8.7.2.3 Equipment Transfer Design Considerations 8-20

8.7.3 Traffic Flow Design Requirements 8-20

8.7.3.1 Overall Traffic Flow Design Requirements 8-20

8.7.3.2 Congestion Avoidance Design Requirements 8-20

8.7.3.3 Noninterference with Other Activities Design Requirements 8-22

8.7.3.4 Emergency and Escape Route Design Requirements 8-22

8.8 TRANSLATION PATHS 8-22

8.8.1 Introduction 8-22

8.8.2 Translation Path Design Considerations 8-23

8.8.3 Translation Path Design Requirements 8-27

8.8.3.1	Minimum Translation Path Dimensions Design Requirements . .	8-27
8.3.2.3	Clearances Design Requirements	8-27
8.8.3.3	Translation Path Obstructions and Hazards Design Requirements .	8-27
8.8.3.4	Marking of Translation Paths Design Requirements	8-28
8.9	**MOBILITY AIDS AND RESTAINTS ARCHITECTURAL INTEGRATION . . . . . .**	**8-28**
8.9.1	Introduction	8-28
8.9.2	Mobility Aids & Restraints Integration Design Considerations	8-28
8.9.2.1	Location of IVA Mobility Aids Design Considerations	8-28
8.9.2.2	Considerations for Location of IVA Personnel Restraints	8-29
8.9.3	Mobility Aids and Restraints Design Requirements	8-29
8.9.3.1	IVA Mobility Aid Integration Design Requirements	8-29
8.9.3.2	IVA Restraint Integration Design Requirements	8-30
8.9.4	Example of IVA Restraints, Architectural Integration Design Solutions	8-30
8.10	**HATCHES AND DOORS . . . . . .**	**8-30**
8.10.1	Introduction	8-30
8.10.2	Hatch and Door Design Considerations	8-31
8.10.3	Hatch and Door Design Requirements	8-33
8.10.3.1	Location Design Requirements	8-33
8.10.3.2	Pressure Hatch Indicator/Visual Display Design Requirements . .	8-33
8.10.3.3	Opening and Closing Mechanisms Design Requirements	8-33
8.10.3.4	Operating Forces Design Requirements	8-34
8.10.3.5	Minimum Size Design Requirements	8-34

8.10.3.6 Door and Hatch Shape Design Requirements 8-34

8.10.3.7 Shape 8-34

8.10.4 Hatch and Door Design Solutions 8-34

8.11 WINDOWS,INTEGRATION 8-35

8.11.1 Introduction 8-35

8.11.2 Windows Integration Design Considerations 8-35

8.11.2.1 Location of Windows Within Space Module Design Considerations 8-35

8.11.2.2 Window Configuration Design Considerations 8-36

8.11.3 Window Integration Design Requirements 8-38

8.12 INTERIOR DESIGN AND DECOR 8-39

8.12.1 Introduction 8-39

8.12.2 Interior Design and Decor Design Considerations 8-39

8.12.2.1 General Interior Decor Design Considerations 8-39

8.12.2.2 Decorative Technique Design Considerations 8-39

8.12.2.3 Psychological Effects Design Considerations 8-43

8.12.2.4 Materials Design Considerations 8-43

8.12.3 Interior Design and Decor Design Requirements 8-43

8.12.3.1 Aesthetic and Psychological Requirements 8-43

8.12.3.2 Decor Flexibility 8-43

8.12.3.3 Color Selection 8-43

8.12.3.4 Decor Cleaning and Maintenance 8-44

8.12.3.5 Decor Durability 8-44

8.12.3.6 Safety 8-44

8.13 LIGHTING 8-44

8.13.1 Introduction 8-44

8.13.2 Lighting Design Considerations 8-44

8.13.2.1 Color of Light Source Design Considerations 8-45

8.13.2.2 Lighting Intensity Design Considerations 8-45

8.13.2.3 Placement of Sources Design Considerations 8-45

8.13.2.4 Light Distribution Design Considerations 8-45

8.13.2.5 Characteristics of Task Materials Design Considerations 8-45

8.13.2.6 Observer Light/Dark Adaptation Design Considerations 8-47

8.13.2.7 Psychological Factors Design Considerations 8-47

8.13.3 Lighting Design Requirements 8-47

8.13.3.1 Illumination Level Design Requirements 8-47

8.13.3.1.1 General Interior Illumination Levels Design Requirements 8-47

8.13.3.1.2 Illumination For Specific Tasks Design Requirements 8-47

8.13.3.1.3 Illumination Levels of Sleeping Areas Design Requirements 8-47

8.13.3.1.4 Illumination Levels for Dark Adaptation Design Requirements . . 8-47

8.13.3.2 Light Distribution Design Requirements 8-49

8.13.3.2.1 Glare from Light Sources Design Requirements 8-49

8.13.3.2.2 Reflected Glare Design Requirements 8-49

8.13.3.2.3 Brightness Ratio Design Requirements 8-49

8.13.3.3 Light Color Design Requirements 8-51

8.13.3.4 Lighting Fixtures and Controls Design Requirements 8-51

8.13.3.5 Medical Lighting Requirements 8-52

8.13.3.6 Workstation Illumation Design Requirements 8-52

8.0 ARCHITECTURE
{A}

8.1 INTRODUCTION
{A}

This section discusses the placement, arrangement, and grouping of compartments and CREW STATIONS in SPACE MODULES. The section also includes design parameters for items which integrate the crew stations:

a. Traffic flow and translation paths.

b. Hatches and doors.

c. Location and orientation cues.

d. Mobility aids and restraints.

(Refer to Section 10.0, Activity Centers, and Section 9.0, Workstations, for detailed design and equipment requirements for each crew station.)

8.2 OVERALL ARCHITECTURAL CONSIDERATIONS AND REQUIREMENTS
{A}

8.2.1 Introduction
{A}

This section defines considerations and requirements that apply to the overall layout and arrangement of the space module.

8.2.2 Overall Architectural Design Considerations
{A}

8.2.2.1 Microgravity Design - Considerations
{O}

Many space modules will have a microgravity environment. The following are general considerations that must be made when designing the overall layout of the space module for microgravity:

a. Access - Microgravity allows greater access to places that would otherwise not be possible in 1-G.

b. Restraints - Many of the activities in microgravity require that the individual be restrained or tethered. Layout of crew stations must consider the extra time for the crewmember to secure him or herself. Activities which require restraints should be grouped as much as possible within the same reach envelope.

(Refer to Paragraph 8.9, Mobility Aids and Restraints Integration, for additional information on restraints and to Paragraph 3.3.3.3.1, Functional Reach Design Requirements, for information on reach limits.)

c. Pre-Mission Training - Training and simulation done on Earth will be conducted in 1-G. The design should be such that the transition from Earth to space environment does not completely negate the effects of this training.

8.2.2.2 Multipurpose Use of Volume Design Considerations
{A}

It is often more efficient to design the workspace so that it can be used for a number of different activities. It may be possible to use a volume which is dedicated to a specific activity and which would otherwise be wasted space when that activity is not being performed. Multipurpose utilization of volume can increase the efficiency of the space module. The activities should be compatible with the surrounding area and with each other. Possible limitations for multipurpose utilization of a volume include:

a. Hygiene and Contamination - One activity may contaminate another, such as body waste management and food preparation.

b. Time - It may take too much time to efficiently convert the volume from one function to another.

c. Privacy Infringement - An activity may infringe on the privacy of a crewmember. This is the main objection to having two persons on different work shifts sharing the same quarters.

8.2.2.3 Physical Dimensions of Crewmembers Design Considerations

{A}

The space module must support mixed crews with different skills living and working together in space for months at a time. The design goal of a space module should be to provide a facility that, within some understandably necessary size constraints, provides a comfortable and functionally efficient environment. In order to achieve this goal, consideration must be given to the physical dimensions of the human. The design must accommodate from the smallest in size to the largest of the selected design crewmember population. Section 3.0, Anthropometrics and Biomechanics, and Paragraph 8.6, Envelope Geometry For Crew Functions, provide data for sizing the space module to accommodate all crewmembers.

8.2.2.4 Module Layout and Arrangement Design Considerations

{A}

Equipment arrangement, grouping, and layout of the space module should enhance crew interaction and facilitate efficient operation. The module layout and arrangement should be based on detailed analyses using recognized human factors engineering techniques. This analysis process should include the following steps:

a. Functional Definition - Definition of the system functions that must occur in the mission.

b. Functional Allocation - Assignment of these functions to equipment, crewmembers, and crew stations.

c. Definition of Tasks and Operations - Determination of the characteristics of the crew tasks and operations required to perform the functions, including:

1. Frequency.

2. Duration.

3. Sequence.

4. Volume required.

5. Special environmental requirements.

6. Privacy and personal space requirements.

d. Space Module Layout - Using the information determined above, the layout of the space module should:

1. Minimize the transit time between related crew stations.

2. Accommodate the expected levels of activity at each station.

3. Isolate stations when necessary for crew health, safety, performance, and privacy.

4. Provide a safe, efficient, and comfortable work and living environment.

8.2.2.5 Crew Station Location

{A}

Stations that perform related functions should be adjacent to each other, if possible. Activities performed at a station should be compatible with surrounding activities and facilities (i.e. non-interference in terms of physical, visual, or acoustical considerations). Crew stations should be separated or isolated

if it improves the overall performance and/or safety of the crewmembers.

(Refer to Paragraph 8.3, Crew Station Adjacencies, for detailed requirements.)

8.2.2.6 Microgravity

{A}

Appropriate mobility aids, restraints, and orientation cues should be provided throughout the space module to accommodate living and working when in a microgravity environment.

(Refer to Paragraph 8.4, Compartment and Crew Station Orientation, and Paragraph 8.9, Mobility Aids and Restraints Integration, for detailed requirements.)

8.2.2.7 Reconfiguration

{A}

The space module should have design features that minimize required crew skill and time in the event of space module reconfiguration.

8.2.2.8 Decor and Lighting

{A}

The design, decor, and lighting of the space module interior should be configured to enhance the performance, safety, and comfort of the crewmembers.

(Refer to Paragraph 8.11, Windows Integration, Paragraph 8.12, Interior Design and Decor, and Paragraph 8.13 Lighting, for detailed requirements.)

8.2.3 Overall Architectural Design Requirements

{A}

The following requirements apply to the overall architecture of the space module. Reference is made to paragraphs within this Section (8.0, Architecture) that expand and detail these requirements.

8.2.3.1 Crew Station Arrangement and Grouping Design Requirements

{A}

Crew stations within the space module shall be arranged and grouped to meet the following goals:

a. Activity Level Accommodation - Each crew station shall be sufficiently large to accommodate the anticipated crew and their activity level.

(Refer to Paragraph 8.6, Envelope Geometry For Crew Functions, for detailed requirements.)

b. Transit Time Optimization - Crew transit times shall be optimized.

(Refer to Paragraph 8.7, Traffic Flow, for detailed requirements.)

c. Station Accessibility - Appropriate cues shall be provided for the location and identification of crew stations. Translation paths and crew station entry and exits shall be sized and located to accommodate anticipated traffic patterns and volume.

(Refer to Paragraph 8.5, Location Coding, Paragraph 8.8, Translation Paths, and Paragraph 8.10, Hatches and Doors, for detailed requirements.)

8.2.3.2 Dedicated vs. Multipurpose Space Utilization Design Requirements

{A}

The interior accommodations shall be designed so that multipurpose utilization of the space meets the requirements:

a. Compatibility of activities within crew stations - Activities that occur within the same station shall not interfere with each other. It is best if the different activities occur at different times.

b. Compatibility with surrounding activities and facilities - Each of the activities performed at a station shall be compatible with surrounding activities and facilities.

8.3 CREW STATION ADJACENCIES

{A}

8.3.1 Introduction

{A}

This paragraph discusses the overall layout of the space module and provides the rules and restrictions concerning the placement of crew stations adjacent to one another. The design requirements for specific crew stations are given in Section 10.0, Activity Centers, and Section 9.0, Workstations.

8.3.2 Crew Station Adjacencies Design Considerations

{A}

8.3.2.1 General Adjacency Design Considerations

{A}

Design of any system or facility should be based on the logical sequence and smooth flow of activities that are to occur in the facility. Generally, the most efficient layout is to place crew stations adjacent to each other when they are used sequentially or in close coordination. There are some limitations to this general rule, however. Adjacent positions should not degrade any of the activities in the stations, nor should the positioning degrade any of the activities in the surrounding stations. General adjacency considerations, beyond simple activity flow, are listed and discussed below.

a. Physical Interference - Some crew stations require a high volume of entering and exiting traffic (both personnel and equipment). Placement of these stations adjacent to each other could result in traffic congestion and loss of efficiency.

b. Noise - Activities such as communications, sleeping and rest, and mental concentration are adversely affected by noise. Activity centers generating significant noise levels should not be placed adjacent to those activity centers adversely affected by noise.

(Refer to Paragraph 5.4, Acoustics, for specific noise tolerance levels for various activities.)

c. Lighting - Ambient illumination from one activity center may either interfere with or benefit the activities in an adjacent center. Activities that require illumination will benefit from the Activities adversely effected by light could be:

1. Certain experiments or lab activities such as photographic development.

2. Sleeping.

3. Use of some optical equipment (such as windows) and self illuminated displays (such as CRT).

(Refer to Paragraph 8.13, Lighting, for further information on lighting.)

d. Privacy - There are cultural and individual requirements that should be considered. Certain personal activities such as sleeping, personal hygiene, waste management, and personnel interactions require some degree of privacy. These private areas should not be placed in passageways or highly congested activity centers.

e. Security - Many of the experiments and production processes will be confidential to a specific industry or organization. These activity centers may require visual, audio, or electrical isolation from the rest of the space module.

f. Vibration - Certain personal activities, such as relaxation and sleep, will be disturbed by vibrations and jolts. In addition, many production, experimental, and control functions will require a stable and vibration-free platform. Crew stations of these types should be isolated from sources of vibration.

(Refer to Paragraph 5.5, Vibrations, for vibration exposure limits.)

g. Contamination - Crew station activities can generate contaminants. These activities may include manufacture, maintenance, personal hygiene, or laboratories. Other crew station activities may be extremely sensitive to contamination. These activities include food storage and consumption, laboratory research, some production processes, and health care. Contaminant sources and areas highly sensitive to contamination should be physically separated in the overall space module layout.

8.3.2.2 Specific Adjacency Design Considerations

{A}

Analyses have been performed on typical space module crew functions to determine adjacency considerations for specific crew stations and functions (Reference 319). The functions considered in the analysis are listed in Figure 8.3.2.2-1. The following criteria were used to evaluate adjacency of the functions. Each of these criteria were given equal weighting:

a. Transition Frequency - The frequency with which crewmembers switch from performing one function to another.

b. Sequential Dependency - The extent to which one function provides the reason, or need, to perform another function.

c. Support Equipment Commonality - The percentage of support equipment shared by the functions.

d. Noise Output and Sensitivity - The potential for noise generated by crew activities and support equipment associated with one function to interfere with the performance of another function.

e. Privacy Requirements - The similarity of the privacy requirements (both audio and visual).

Crew support
- Meal preparation
- Eating
- Meal clean-up
- Exercise
- Medical care
- Full-body cleansing
- Hand/face cleansing
- Personal hygiene
- Urination/defecation
- Training
- Sleep
- Private recreation and leisure
- Small-group recreation and leisure
- Dressing/undressing
- Clothing maintenance

Station operations
- Meetings and teleconferences
- Planning and scheduling
- Subsystem monitoring and control
- Pre/post-EVA operations
- IVA support of EVA operations
- Proximity operations
- General housekeeping
- ORU maintenance and repair
- Logistics and resupply

Mission operations
- Payload support
- Life sciences experiments
- Materials processing experiments

Reference: 319, pg. 9

MSIS-85

Figure 8.3.2.2-1 Typical Functions of a Space Module Crew

The results of the study are shown in Figure 8.3.2.2-2. Crew functions are plotted in the chart. The chart describes the functions on two scales: Public Functions/Private Functions and Group Functions/Individual Functions. The relative position of the functions on the chart indicate the relative compatibility of these functions. Consider grouping stations which support the functions that are close together on the chart. Consider separating stations which support the functions that are separated on the chart.

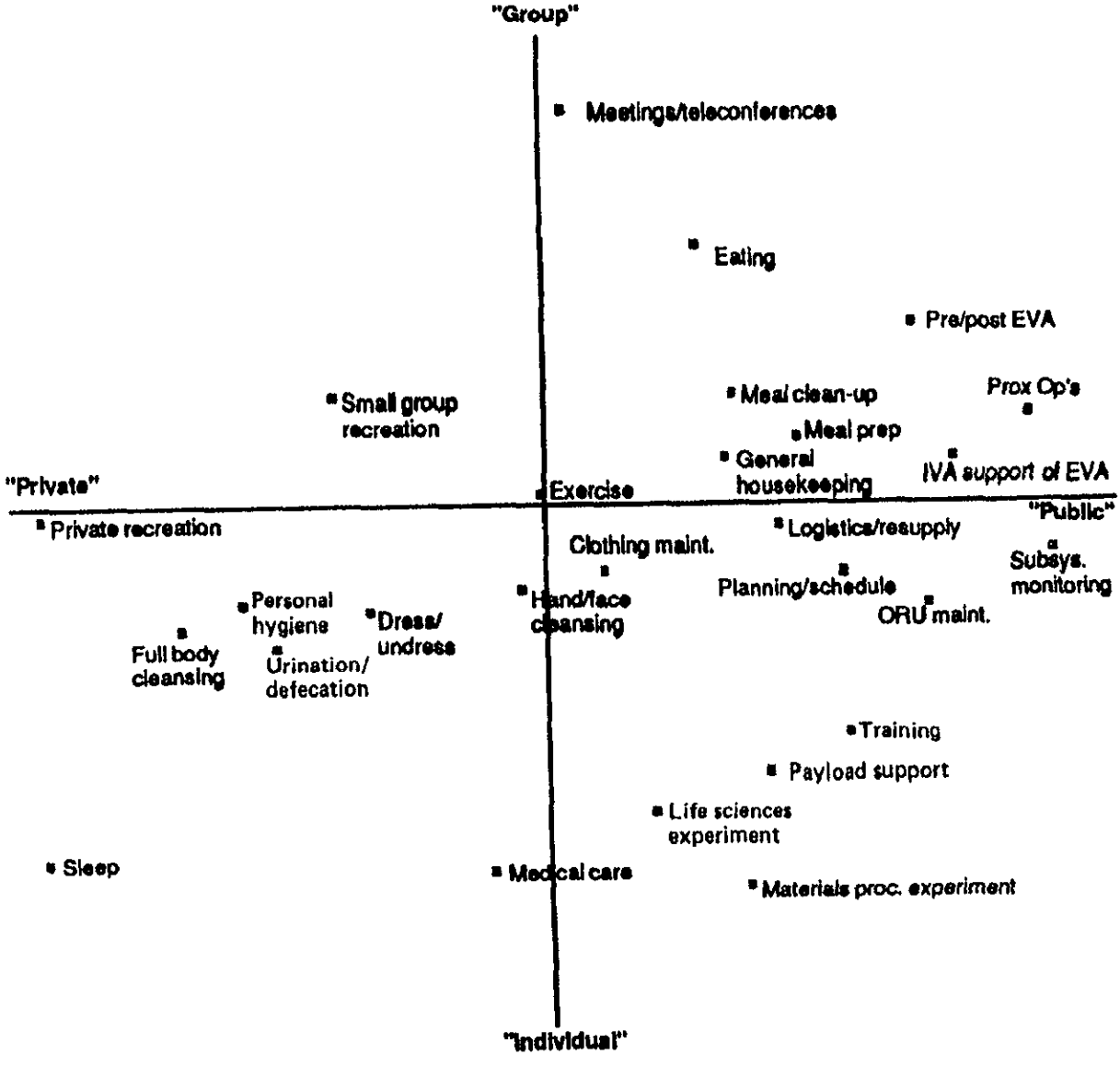

Reference: 319, page 60

MSIS-86

Figure 8.3.2.2-2. Consideration for the Relative Locations of Space Module Functions Based on the Results of Functional Relationships Analysis

8.3.3 Crew Station Adjacencies Design Requirements
{A}

8.3.3.1 Adjacent Crew Station Design Requirements
{A}

If possible (and within the restrictions of Paragraph 8.3.3.2, Non-Adjacent Crew Stations - Design Requirements), crew stations shall be placed adjacent to each other (or combined) when any of the following conditions exist:

a. Sequential Dependency - The activities occurring in one station are sequentially dependent on the activities occurring in another station (i.e., one activity provides the reason or need to perform the other activity).

b. High Transition Frequency - Crewmembers change frequently from the activities occurring in one station to the activities occurring in another station.

c. Shared Support Equipment - The equipment used to support the activities in each station is similar or identical.

8.3.3.2 Non-Adjacent Crew Stations - Design Requirements
{A}

Crew stations shall not be located adjacent to each other when any of the following conditions exist:

a. Physical Interference - Crew traffic flow, equipment movement, and activities of one station physically restrict the activities in another station.

b. Environmental Interference - The activities in one station affect the surrounding environment so that the activities in an adjacent station are degraded. These environmental effects include lighting, noise, vibration, heat.

c. Degradation of Crew Health and Safety - The activities or contents of one station could, within a reasonable possibility, degrade the health and safety of the crew in an adjacent station.

d. Infringement on Privacy - A station infringes on the privacy of the crew members in an adjacent station to an extent unacceptable to the crew members.

e. Infringement on Security - A station infringes on the security and confidentiality of the activities of an adjacent station to an extent unacceptable to the mission of the two functions.

8.4 COMPARTMENT AND CREW STATION ORIENTATION
{O}

8.4.1 Introduction
{O}

This paragraph discusses the orientation of crew stations (workstations, crew activity centers, etc.) within the space module. The information in this section applies to a microgravity environment where there is no gravity to define a single orientation. The design requirements for specific crew stations are given in Section 10.0, Activity Centers, and Section 9.0, Workstations.

8.4.2 Orientation Design Considerations
{O}

In a 1-G or partial gravity environment, orientation is not a particular problem. "Down" is the direction in which gravity acts and the human is normally required to work with feet down and head up. In a microgravity environment, the human working position is arbitrary. There is no gravity cue that defines up or down. In microgravity, orientation is defined primarily through visual cues which are under the control of the system designer. The orientation within a particular crew station is referred to as a local vertical. There are several orientation factors to be considered when designing a microgravity environment.

a. Work Surfaces - Microgravity expands the number of possible work surfaces (walls, ceilings, as well as floors) within a given volume. This could result in a number of different "local verticals" within a module.

b. Training and Testing - Some of the working arrangements that are possible in microgravity will not easily be duplicated on Earth. Pre-mission training and testing will suffer with these arrangements. Additional training might have to be conducted during the actual mission. This could drastically reduce the effectiveness of a short duration mission.

c. Disorientation - Humans, raised in a 1-G environment, are accustomed to forming a mental image of their environment with a consistent orientation. People locate themselves and objects according to this mental image. If the person is viewing the environment in an unusual orientation, this mental image is not supported. This can promote disorientation, space sickness, temporary loss of direction, and overall decreased performance.

(Refer to Paragraph 4.5, Vestibular System, for more information on disorientation in zero-gravity.)

d. Visual Orientation Cues - Visual cues are needed to help the crewmember quickly adjust his or her orientation for a more familiar view of the world. These visual cues should define some sort of horizontal or vertical reference plane (such as the edges of a CRT or window). Of the two, it appears that the horizontal cue is more effective. Further research is presently being conducted by NASA to determine additional guidelines for the design of visual orientation cues.

e. Equipment Operation - Due to prior training and physical characteristics of the human, some pieces of equipment are more efficiently operated in one specific orientation. Labeling must also be properly oriented to be readable. Direction of motion stereotypes exist for most controls. For instance, in the US, power is turned on when a switch is positioned "up" or toward the head. If equipment items, labels, and controls have different orientations within the same crew station, human errors are likely to occur.

8.4.3 Orientation Design Requirements

{O}

The following are design requirements for establishing an orientation within a space module:

a. Consistent Orientation - Each crew station shall have a local vertical (a consistent arrangement of vertical cues within a given visual field) so that the vertical orientation within a specific work station or activity center shall remain consistent. (See Figure 8.4.3-1 for illustration.)

b. Visual Orientation Cue - A visual cue shall be provided to allow the crewmember to quickly adjust to the orientation of the activity center or workstation.

c. Separation - When adjacent workstations or activity centers have vertical orientations differing by 90 degrees or more, then clearly definable demarcations shall separate the two areas.

8.4.4 Example Orientation Design Solutions

{O}

One of the modules of Skylab, the Orbital Work Station (OWS), had a consistent local vertical and another module, the Multiple Docking Adapter (MDA), did not. It was found that people adapted more quickly to the orientation of the OWS than they did to the MDA. It also took crewmembers longer to locate a particular storage container in the MDA than the OWS.

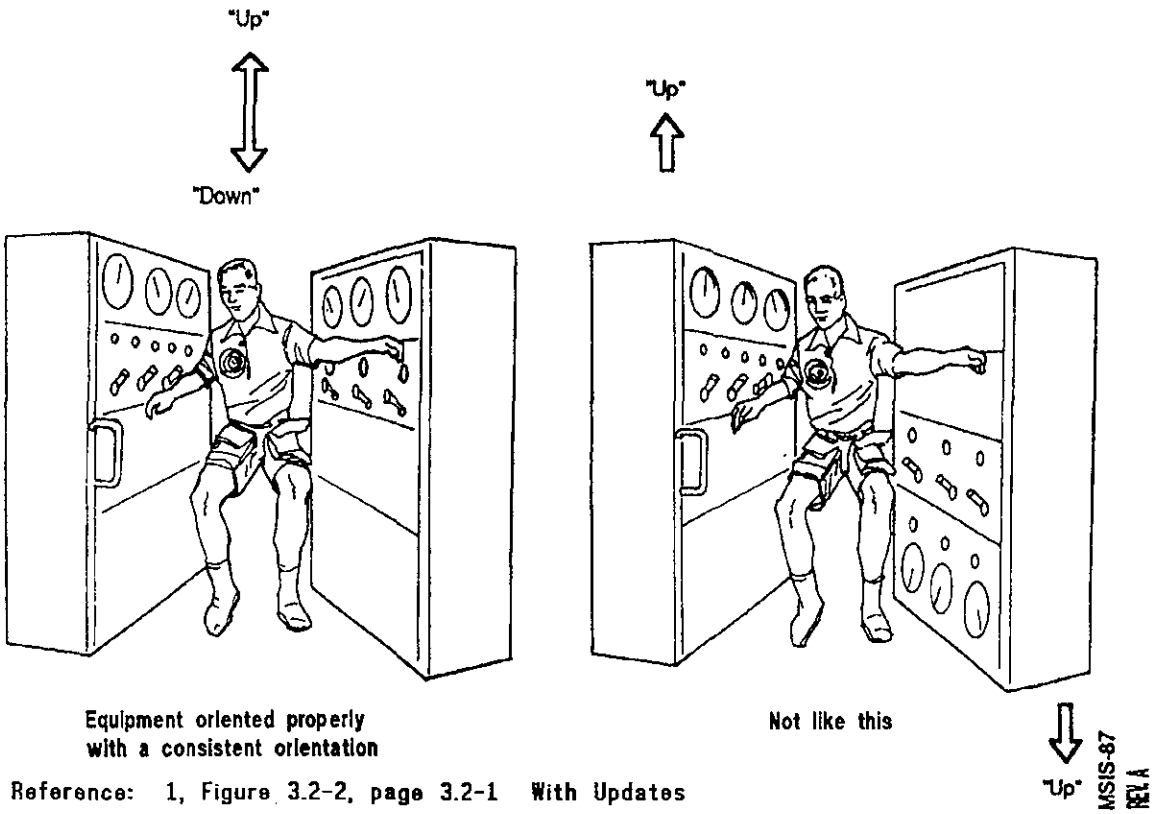

Reference: 1, Figure 3.2-2, page 3.2-1 With Updates

Figure 8.4.3-1. Equipment Shall Have A Consistent Orientation Within a Workstation or Activity Center

8.5 LOCATION CODING

{A}

8.5.1 Introduction

{A}

This section discusses the standards for defining locations throughout a space module and or vehicle. The location coding system shall apply to all crew interface areas including:

a. Control and display panels.

b. Stowage areas, lockers, subcompartments, and containers.

c. Access panels.

d. Systems, components, and equipment.

(Refer to Paragraph 9.5, Labeling and Coding, for specific labeling and coding design requirements and considerations.)

(Refer to Paragraph 8.4, Compartment and Crew Station Orientation, for requirements defining orientation in microgravity.)

8.5.2 Location Coding Design Considerations

{A}

8.5.2.1 Users of A Location Coding System Design Considerations

{A}

Many different people will use the space module location coding system (both crewmember and non-crewmember personnel)

and the system will be used in a wide variety of situations (both emergency and routine). It is therefore important that the system be simple to use, easy to remember, easy to communicate, and consistent throughout the system. The following is a list of the personnel who might use a space module location coding system and ways in which it might be used:

a. Space Module Crew - Locations codes are necessary to minimize crew search time and maintain consistent equipment placement during nonuse periods. This is especially important for single equipment items requiring rapid use by more than one crewmember.

b. Ground Support Personnel - A location coding system will be used to communicate information and instructions between ground and module crews.

c. Crews of Other Modules - Location codes will be necessary for docking or any coordinated activity between modules.

d. Maintenance and Emergency Personnel - Repairs and rescue operations require an accurate and easily communicated location coding system.

e. Logistics and Resupply Personnel - Location codes are required for inventory assessment and resupply plan development and communication.

8.5.2.2 Location Coding System Implementation-Design Considerations

{A}

In order to be effective, it is important that a consistent coding system be established early in the space module development. The system must be incorporated into the design of space module compartments, components, control consoles, racks, and all general installations. This coding system must then be used throughout all phases of crew training and system documentation.

8.5.3 Location Coding Design Requirements

{A}

8.5.3.1 Alphanumeric Coding Design Requirements

{A}

An alphanumeric coding system shall be established for the space module. The system shall have the following characteristics:

a. Ease of Use - The coding system shall be simple to use, communicate, and memorize.

b. Module Consistency - The coding system shall be consistent throughout the space module and attached components. The system shall be consistent for both interior and exterior locations.

c. User Consistency - The coding system shall be consistent for all personnel who use and maintain the module. The system shall be compatible with (if not identical to) design engineering location systems.

d. Flexibility - The coding system shall be flexible to allow adaptation to space module design changes and reconfiguration.

8.5.3.2 Directional Designation Design Requirements

{A}

Whenever possible, a consistent directional orientation shall be established for the entire space module. The following directional designation terms shall apply to space modules:

a. Forward/Aft - Forward shall be defined by the plus velocity vector of the space module. If there is no designated velocity vector, then "forward" shall be arbitrarily defined.

b. Up/Down - An up/down directional designation shall be established perpendicular to the forward/aft and port/starboard plane.

c. Port/Starboard- When facing in the "forward" direction, "port" shall be defined as the

direction to the left and "starboard" shall be defined as the direction to the right.

8.5.3.3 Location & Orientation By Color Coding Design Requirements

{A}

The following requirements apply to the use of color for location and orientation coding:

a. Colors - The colors selected for coding shall be consistent with the requirements in Paragraph 9.5.3.2.i, Color Coding.

b. Consistency - If color is used for location coding purposes, the colors shall have the same operational significance throughout the space module and shall be consistent in application.

c. Space Module Lighting - Exterior lighting for orientation coding of space module shall be in accordance with the following practices:

1. Color code - The colors shall follow the code in Figure 8.5.3.3-1

2. Lamp intensity - Minimum lamp intensity is cited in Figure 8.5.3.3-1. These intensities are to be measured 60 degrees off the center line of the cone of radiation.

3. Chromaticity - The chromaticity of space module lights shall be as defined in Figure 8.5.3.3-1 and MIL-C-25050.

8.5.3.4 Location Coding With Placards Design Requirements

{A}

A space module shall have markings to provide the crew with equipment and compartment identification, and directional and spatial orientation information. The specific requirements for location coding placards are as follows:

a. Map - A map of location codes shall be provided at the entrances to areas where the coding scheme is not obvious to the crewmember or for areas in which there is a significant amount of preparation activity such as stowage, adjustment, or maintenance of items.

COLOR	VEHICLE LOCATION	LUMINOUS INTENSITY CANDELLA (CANDLEPOWER)	CHROMATICITY (CIE CHROMATICITY DIAGRAM COORDINATES)
Red	Port (left) side	2.5 (0.2)	X - 0.690 +/- 0.020 Y - 0.290 +/- 0.020
Green	Starboard (right) side	6.3 (0.5)	X - 0.100 +/- 0.050 Y - 0.700 +/- 0.060
Yellow	Bottom	2.5 (0.2)	X - 0.580 +/- 0.020 Y - 0.410 +/- 0.015
White	Aft (preferred)	2.5 (0.2)	X - 0.350 +/- 0.050 Y - 0.365 +/- 0.030
Blue	Aft (not preferred)	6.3 (0.5)	X - not greater than 0.245 Y - not greater than 0.200
Dual white/ Yellow	Forward	See above	See above

Reference: 199, pgs. 17, 18, 19

* Assumes color recognition up to 600 meters (2000 ft)

MSIS88 Rev. B

Figure 8.5.3.3-1 Spacecraft Orientation Coding Lights

b. Placards on Movable Items - Movable items and their stowage locations shall be labeled as necessary to ensure the item is returned to the proper location after use.

c. Control Room Placards - Control rooms shall have placards which identify the room and the control station within the room.

d. Directional Designation - A visual cue shall be provided to allow the crewmember to quickly adjust to the orientation of the crew station.

(Refer to Paragraph 8.4, Compartment and Crew Station Orientation, for additional information concerning orientation requirements.)

e. Markings - Label and placard format and markings shall meet the requirements in Paragraph 9.5, Labeling and Coding.

8.6 ENVELOPE GEOMETRY FOR CREW FUNCTIONS

{A}

8.6.1 Introduction

{A}

This section provides information for sizing the space module for human work and habitation. Physical body envelopes for various crew functions are given. The information in this section can be used to develop a preliminary overall layout of the space module.

(Refer to Section 9.0, Workstations, and Section 10.0, Activity Centers, for detail design requirements and consideration for specific crew stations.)

(Refer to Section 3.0, Anthropometrics and Biomechanics, for additional information on human size and work envelope.)

8.6.2 Envelope Geometry Design Considerations

{A}

There are four basic factors that affect the required habitable volume and envelope geometry in a space module. These factors are listed below:

a. Mission duration.

b. Visual factors.

c. Physical body envelope.

d. Social factors.

Each of these factors are discussed in Paragraphs 8.6.2.1 through 8.6.2.4.

8.6.2.1 Mission Duration Design Considerations

{A}

The duration of the mission has an overall effect on the required envelope geometry. Increasing mission duration requires a greater physical envelope to accommodate mission tasks and personal needs. Crew accommodation needs are additive, so the total required habitable volume per crewmember increases with mission duration. Guidelines for determining the amount of habitable volume per crewmember for varying mission durations are shown in Figure 8.6.2.1-1.

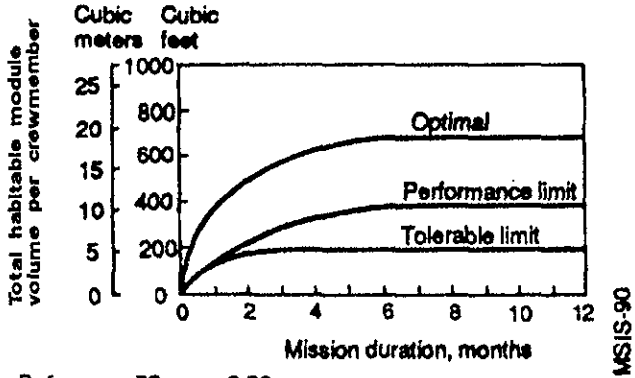

Reference: 78, page 2-39

Figure 8.6.2.1-1 Guideline for Determination of Total Habitable Volume per Person in the Space Module

8.6.2.2 Visual Design Considerations

{A}

As the mission duration increases, there is a greater tendency for the crew to feel confined and cramped. This can affect psychological health and crewmember performance. The judged physical space is not necessarily relative to the physical size of the room. The feeling of spaciousness can be achieved visually through the arrangement, color, and design of the walls and partitions of the space module. Some of the facts that are known about visual spaciousness are listed below:

a. Distance From Viewer - Errors of overestimation of space increase as the distance from the viewer increases. This indicates desirability of long view axes.

b. Room Shape - Irregular shaped rooms are perceived to have more volume than compact or regular shaped rooms of equal volume.

c. Viewing Along a Surface - Distances judged along surfaces are overestimated with respect to those judged through empty space. If an observer looks along a wall to another boundary wall, the boundary wall would be judged as further away than if it is seen from the same physical distance across the empty space of the room.

d. Lighting and Color - The effects of brightness, color saturation, and illumination levels on perception of volume are listed in Figure 8.6.2.2.-1.

(Refer to Paragraph 8.12.2, Interior Design and Decor Design Considerations, for details of the effects of lighting and color.)

e. Clutter - Clutter, or items that visually detract from long view axes, decrease the perceived room volume.

f. Windows - Windows allow the crewmember to focus on objects (such as Earth) outside the space module. This can significantly increase the sense of spaciousness and psychological well-being of the crewmember.

Volume perception (roominess)	Brightness*	Color saturation	Illumination level
Enlarge	Areas will be enlarged by lightness. (Use to alleviate feelings of oppression or "closed-in".)	Pale or desaturated colors "recede" and open up a room	High
Close-in	Areas will be closed-in by darkness.	Dark or saturated hues "protrude", and close-in a room	Low

Reference: 134, Figure 4-35 With Updates

* Brightness is a function of surface reflectance and illuminance

MSIS 91 Rev. A

Figure 8.6.2.2-1. Effects of Brightness, Color, Color Saturation, and Illumination Level on Perception of Volume

(Refer to Paragraph 8.11, Windows Integration, for additional information on the use of windows in architecture.)

8.6.2.3 Body Envelope Design Considerations

{A}

The interior volume of the space module must accommodate not only the static human body but also the body when it performs the activities required of the mission. The body motion envelope is a conceptual surface which just encloses the extreme body motion of an activity. Crewmembers vary in size and the body motion envelope varies accordingly. The space module should not intrude on the body motion envelope of the larger crewmembers and yet not be so large that it is inconvenient or inefficient for the smaller crewmembers. In microgravity, additional considerations must be made for an expanded range of possible movements and for the neutral body posture. Approximate dimensions required to accommodate the body motion envelope of the 95th percentile male crewmember performing various IVA activities in microgravity are given in Figure 8.6.2.3-1. These volumes can be arranged and grouped to give an approximate estimate of the interior volume required for different crew stations.

(Refer to Paragraph 3.2.1, Anthropometric Database Design Considerations, for a definition of the American male crewmember.)

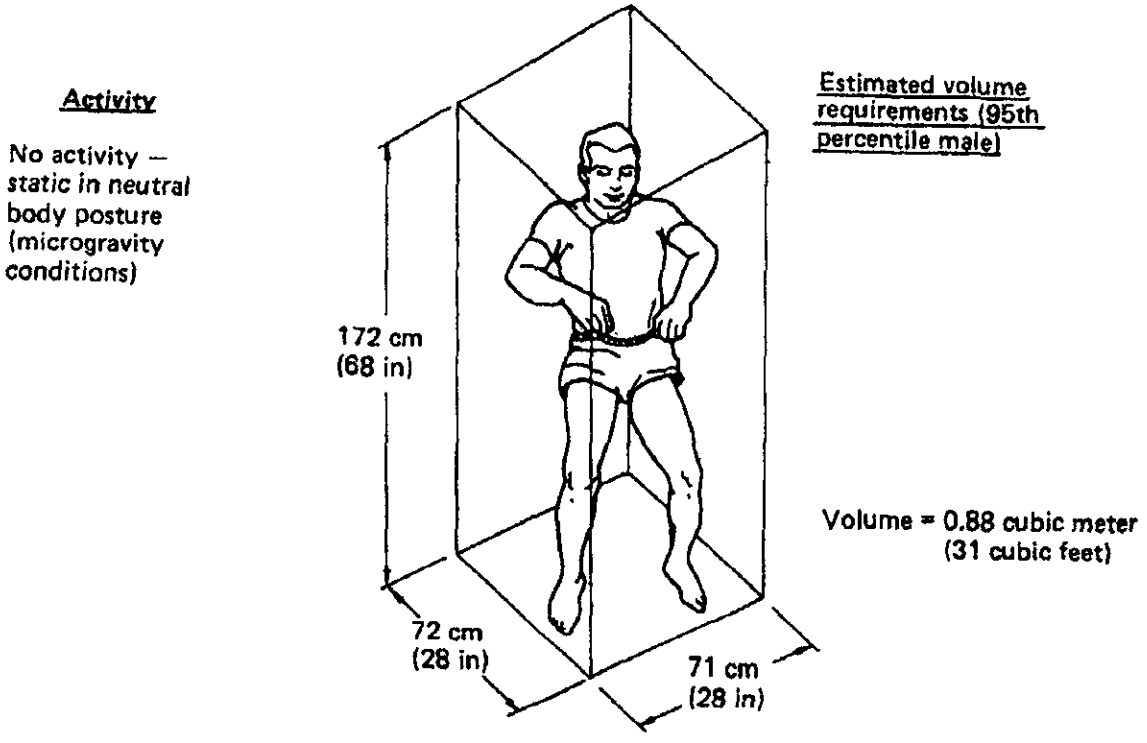

(Refer to Figure 3.3.3.3.1-4)

Reference: 215, page 38, 39
310
320 With Updates

MSIS 92
1 of 2
Rev. A

Figure 8.6.2.3-1. Approximate Dimension Required to Accomodate the Body Motion Envelope of the 95th Percentile American Male

Maximum 1-g unrestrained clothing don/doff envelope

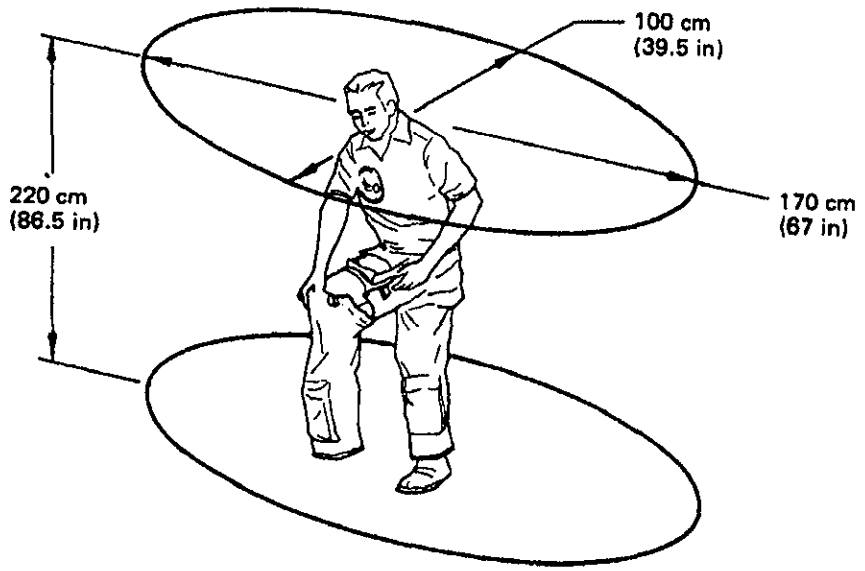

Volume = 2.95 cubic meters (104 cubic feet)

Controlled Tumbing in all planes (microgavity)

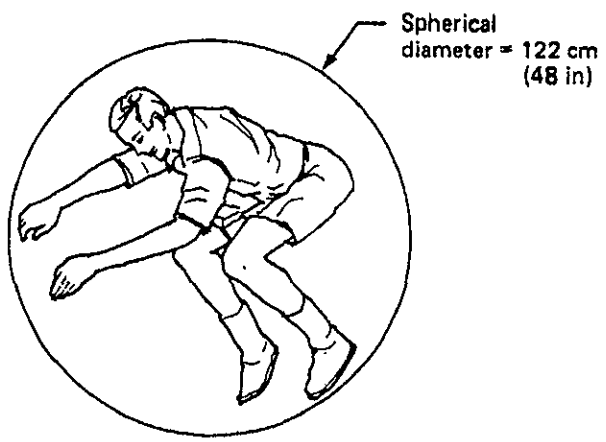

(Very approximate)

Volume = 1 cubic meter (35 cubic feet)

MSIS 92
2 of 2
Rev. A

Reference: 215, Page 38, 39
310
320

With Updates

Figure 8.6.2.3-1. Approximate Dimension Required to Accomodate the Body Motion Envelope of the 95th Percentile American Male(Continued)

(Refer to Section 3.0, Anthropometrics and Biomechanics, for further information on the body dimensions and the neutral body posture.)

8.6.2.4 Social Design Considerations

{A}

Some of the social factors that should be considered in the layout of the interior volume of the space module are discussed below:

a. Privacy - Visual privacy is a major concern for some activities such as body waste management and personal hygiene. Volumes devoted to these functions must be visually isolated. In addition, it has been found that a general sense of privacy increases when visual exposure of the individual is decreased and the individual has controllable visual access to the outside world. In other words, the individual feels private if he or she has the ability of observing without being observed. This should be considered when designing individual crew quarters.

b. Leadership Role - The size and location of a crewmember's private quarters can impart a sense of status to other crewmembers. If desirable for organizational purposes, this fact can be used in configuring the space module.

c. Proxemics - Proxemics encompasses the study of space as a communications medium. Some factors to consider are:

1. When conversational or recreational space is necessary, the space should be configured so that the crewmembers can be at distances of 0.5 to 1.2 meters (1.5 to 4.0 feet) and at angles of approximately 90 to 180 degrees from each other. In general, 90 degrees is preferred for casual conversation while 180 degrees is for competitive games or negotiations.

2. Equal relative heights among social conversant should be maintained through spatial configuration and the placement of restraints.

3. In a socially communicating group it should be possible for all to position themselves in relatively similar body orientation and limb location. Maintaining a similar vertical orientation is also desirable.

8.6.3 Envelope Geometry Design Requirements

{A}

8.6.3.1 Crew Station Body Envelopes Design Requirements

{A}

The following are requirements for crew station body envelope geometry:

a. Adequate Volume - Adequate crew station volume shall be provided for the crewmembers to perform tasks and activities (including exit and entry) without restriction. The volume shall also accommodate tools and equipment used in the task.

b. Accessibility - The geometric arrangement of crew stations shall provide necessary and adequate ingress and egress envelopes for all functions within the station.

c. Full Size Range Accommodation - All workstations shall be sized to meet the functional reach limits of the smaller of the defined crewmember size range and yet shall not constrict or confine the body envelope of the larger of the defined crewmember size range.

8.6.3.2 Total Module Habitable Volume Design Requirements

{A}

The following requirements apply to the total habitable volume in the module:

Mission Function Accommodation - Sufficient total habitable volume shall be provided to accommodate the full range of required mission functions.

No Degradation to Mission - Sufficient habitable volume shall be provided and configured to decrease the possibility of degradation of crew performance due to detrimental psychological effects from feelings of confinement.

Design shall permit total habitable volume growth to accommodate the full range of required mission functions as number of crewmembers and station operations increase.

8.6.4 Example Volume Allocations Design Solutions

{O}

8.6.4.1 Skylab Food Management Compartment

{O}

The Skylab Food Management Compartment for a crew of three was combined with a wardroom (see Figure 8.6.4.1-1). The area measured 2.29 m (7.5 ft) long by 2.44 m (8 ft) wide by 1.98 m (6.5 ft) high. Total combined habitable volume was 11.1 m^3 (391 ft^3). This compartment was used by three crewmembers for a mission of 84 days.

Access to the dining position for the crewman next to the freezer was judged not adequate when the other positions were occupied. The crewman in the inboard dining position could not reach the food storage area without disturbing the other diners.

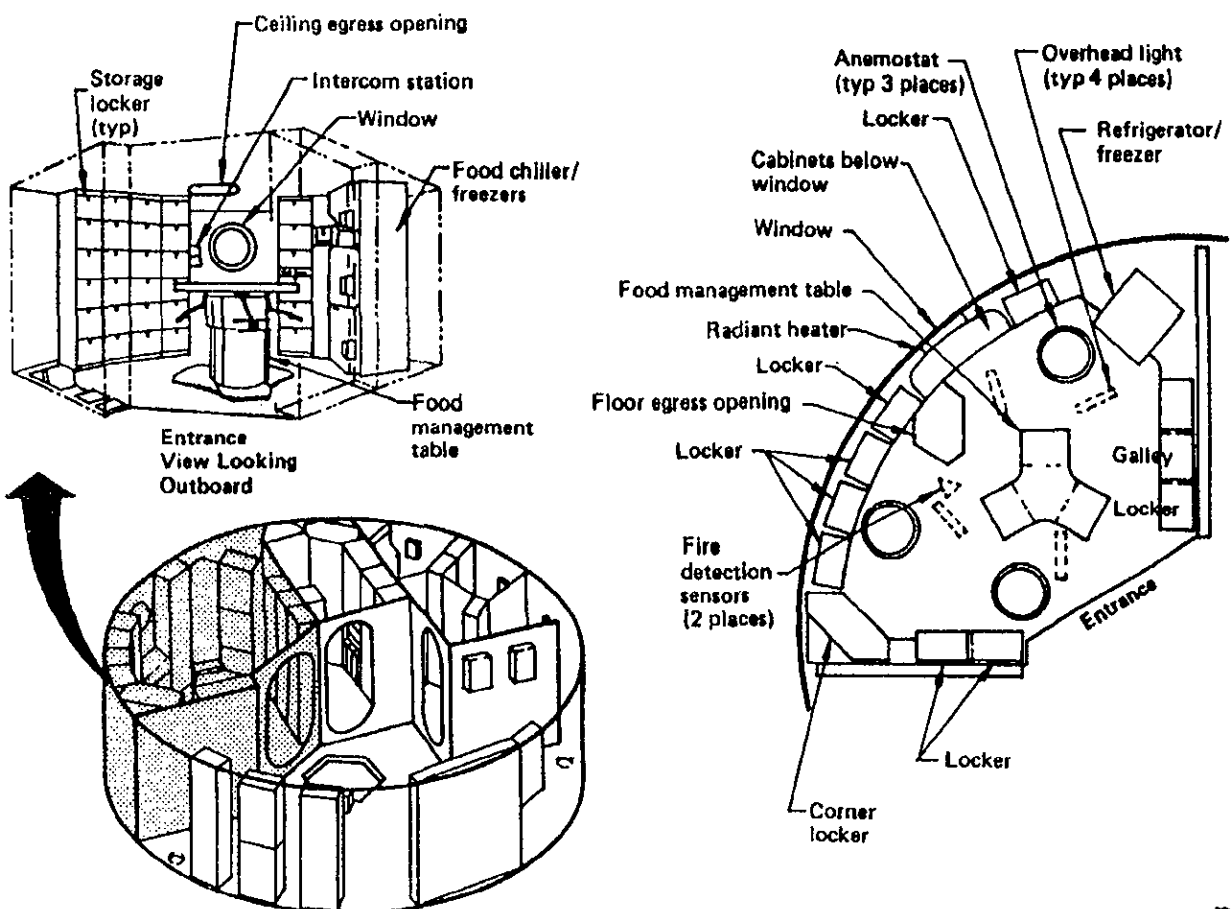

Reference: 130, Figure 7, page 11

MSIS-93

Figure 8.6.4.1-1. Skylab Food Management Compartment

8.6.4.2 Skylab Sleep Compartment

{O}

The Skylab sleep compartment (Figure 8.6.4.2-1) for one crew member was 0.92 m (3 ft) long by 1.07 m (3.5 ft) wide by 1.98 m (6.5 ft) high. The total habitable volume was approximately 1.92 m^3 (68 ft^3).

8.6.4.3 Skylab Waste Management and Personal Hygiene Compartments

{O}

The Skylab combined both the waste management and hygiene functions in a single compartment (see Figure 8.6.4.3-1). The dimensions were 1.98 m (6.5 ft) long by 0.92 m (3.0 ft) wide by 1.98 m (6.5 ft) high. The total combined free volume was 3.57 m^3 (126 ft^3). The total habitable volume utilized by the hygiene function was approximately 2.42 m^3 (85 ft^3). The total habitable volume utilized by the waste management function was approximately 2.42 m^3 (85 ft^3).

This compartment was satisfactory for three crewmembers for 85 days, but interference between crewmen doing both functions simultaneously led to their suggesting separate compartments.

8.7 TRAFFIC FLOW

{A}

8.7.1 Introduction

{A}

This section contains information for planning and designing the traffic flow within the space module.

(Refer to Paragraph 8.8, Translation Paths, Paragraph 8.9, Mobility Aids and Restraints Architectural Integration, and Paragraph 8.10, Hatches and Doors, for specific data on the design and location of IVA translation paths, mobility aids and restraints, and hatches and doors.)

(Refer to Paragraph 14.5, EVA Mobility and Translation, for information on EVA traffic flow.)

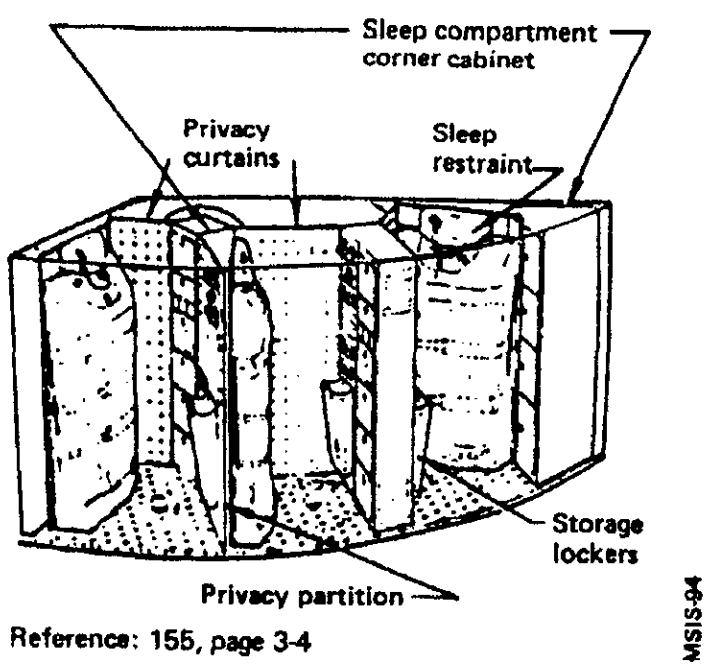

Figure 8.6.4.2-1. Skylab Sleep Compartments

8.7.2 Traffic Flow Design Considerations
{A}

8.7.2.1 Optimization of Traffic Flow Design Considerations
{A}

The following analytical process can help to optimize traffic flow and crew functioning:

a. Analyze Functions and Tasks - Determine the type and level of activity that occur at each of the crew stations and the required movement of crew and equipment between the stations.

b. Locate Crew Stations - Locate crew stations to minimize the traffic flow.

c. Design Translation Paths - Once the crew stations are located, design the translation paths for efficient traffic flow. First, design the paths to accommodate the traffic flow requirements of the worst case conditions. Then, complete the design to meet other traffic flow requirements. The following are steps for translation path design:

1. Define traffic flow details: number of persons, number of transits, type of packages, speed of transit, type of activity surrounding the path, etc. Be sure to identify worst case traffic flow conditions.

2. Use the above information and Figure 8.7.2.1-1 to determine the required translation path.

3. Use the information in Paragraph 8.8.3, Translation Path Design Requirements, to determine the minimum path size.

4. Accommodate possible congestion at intersections through scheduling, increase of path size, provision for visibility of crossing traffic, etc.

Priorities of Functions		Type of translation path (refer to Para. 8.8, Translation Paths)
Primary -- IVA and EVA	Frequently traveled path by both IVA and EVA suited crewmembers. Will accommodate translation of an EVA crewmember with package. Can be used as an emergency path.	Primary passageway
Primary -- IVA only	Frequently traveled path but only by IVA suited crewmembers. Will accommodate translation of an IVA crewmember with package. Can be used as an emergency IVA path.	Standard passageway
Secondary -- IVA only	Very low frequency transit from one point to another, IVA only	Pass-through
Emergency	Infrequently traveled but necessary for emergency repairs, rescue, or escape. Will accommodate EVA suited crewmember. Packages must be translated in front or behind crewmember.	Minimal passageway

Reference: 250 With Updates

MSIS-178 REV A

Figure 8.7.2.1-1. Guide for Determining Type of Translation Path

8.7.2.2 IVA Translation Rates Design Considerations

{O}

IVA translation rates in microgravity were measured in Skylab and are listed below:

a. Ordinary Point To Point Translation - 0.4 to 0.6 m/sec (1.5 to 2.0 ft/sec).

b. Moving Large or Massive Equipment - 0.15 to 0.30 m/sec (0.5 to 1.0 ft/sec).

c. Off-Duty Gymnastics and Play - 1.8 m/sec (6 ft/sec).

(Refer to Paragraph 4.9.2, Strength - Design Considerations, for additional information on translation rates and force capabilities.)

8.7.2.3 Equipment Transfer Design Considerations

{O}

Crewmembers may be required to handle and transfer equipment and packages. The following factors must be considered in designing for equipment and package transfer in microgravity conditions:

a. Task Constraints - The planning of equipment transfer traffic routes must take into account task constraints such as time, safety requirements (protection of both crew and equipment), required positioning accuracy, other traffic, and gravity conditions.

b. Translation Path and Equipment Size - A translation path approximately the size of the equipment being transported will degrade both visibility and use of hands and feet for translation mobility and stability (see Figure 8.7.2.3-1). Equipment transfer is more efficient in a larger aisle that allows parallel passage of both the crewmember and the package.

c. Mobility Aids and Package Handles - If handrails must be used for mobility, then package handles or straps must be provided to free the crewmember's hands.

d. Equipment Mass - Although there are no theoretical limits on the mass of cargo that can be transported in microgravity, a large mass may require a track or restraints along the translation path to keep it under control.

(Refer to Paragraph 11.12, Packaging, for additional information on equipment configuration for transport.)

(Refer to Paragraph 4.9, Strength, for information on mass handling capabilities.)

8.7.3 Traffic Flow Design Requirements

{A}

8.7.3.1 Overall Traffic Flow Design Requirements

{A}

All traffic routes shall allow movement of personnel and equipment within the time constraints of both normal operational and emergency conditions.

8.7.3.2 Congestion Avoidance Design Requirements

{A}

Traffic congestion shall be avoided. The following methods shall be taken to avoid congestion:

a. Reduce the Need for Traffic - Crew stations shall be located and designed to minimize the need for transit within the space module.

(Refer to Paragraph 8.3, Crew Station Adjacencies, and Paragraph 10.12, Storage, for additional information on reducing the need for traffic.)

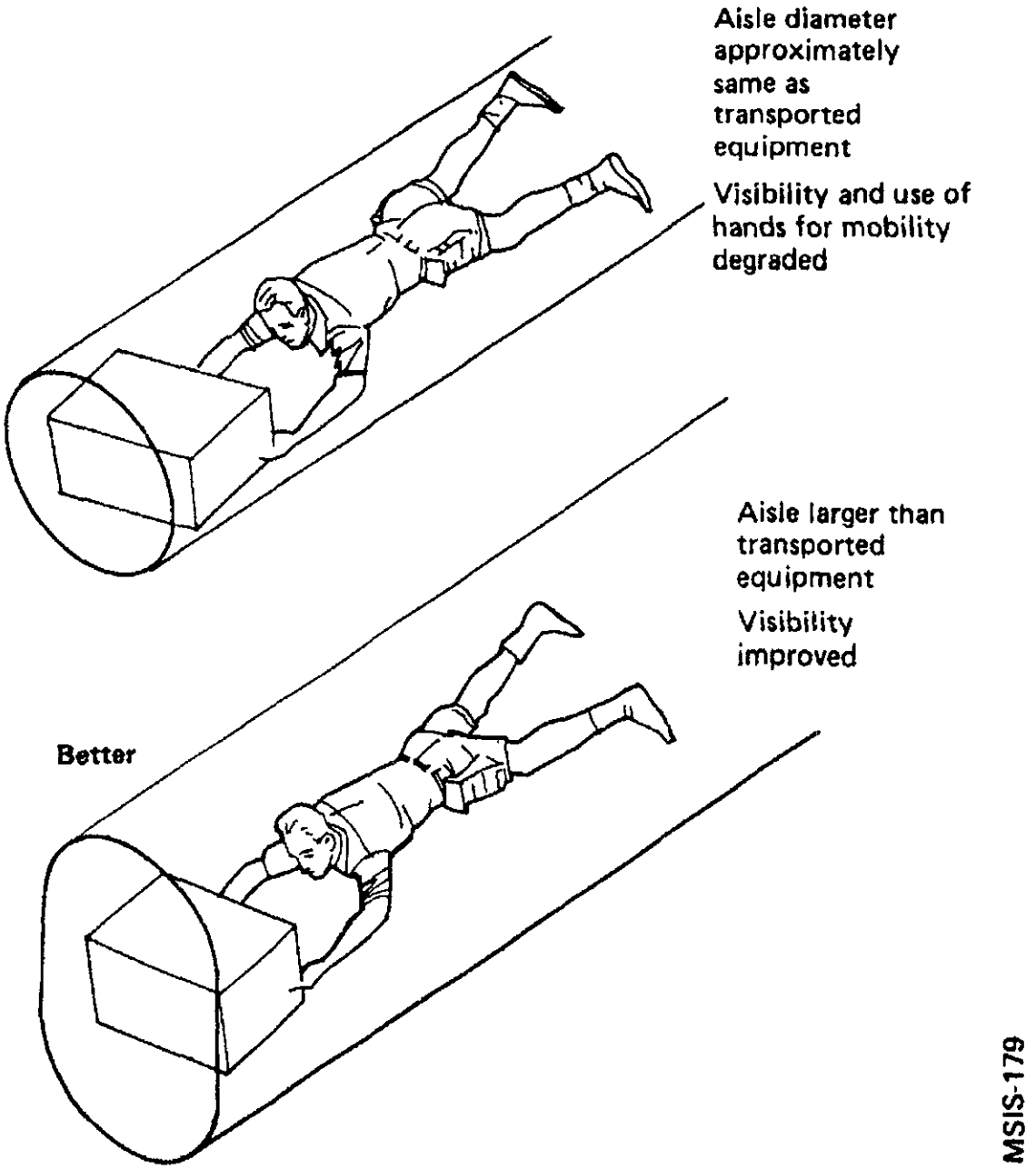

Figure 8.7.2.3-1. Relationship of Aisle Size to Ease of Equipment Transport (Microgravity Conditions)

b. Alternate Paths - Provide alternate paths around congested areas.

c. Proper Scheduling - Schedule activities to avoid congestion.

d. Reduce Congestion Due to Large Volume Transfer - Traffic flow patterns shall minimize the distance large volumes are transported and reduce as much as possible congestion caused by large volumes transported through tight areas.

e. Reduce Cross Traffic - Avoid crossing heavily traveled paths.

f. Translation Path Size - Translation paths and hatch and door openings shall be of proper size and configuration to accommodate predicted traffic flow.

8.7.3.3 Noninterference with Other Activities Design Requirements

{A}

Traffic flow shall not interfere with other unrelated operational and recreational activities of the crew. These activities include sensitive space module control, routine servicing, experimentation, eating, sleep, and relaxation.

8.7.3.4 Emergency and Escape Route Design Requirements

{A}

The design for traffic flow shall take into account the possibility of a space module or subsystem failure or damage that could require evacuation. Specifically, the following requirements apply:

a. Escape Routes and Isolation Areas - Crewmembers shall be provided with escape routes for egress and/or isolation in the event of the need for an emergency egress from their immediate location.

b. Dual Escape Routes - Where practical, dual escape routes shall be provided from all activity areas to serve in the event that the use of one route is impossible.

c. Protection of Entry/Exit Path - Provisions shall be made to the maximum extent possible to ensure that compartment entry/exit paths can be maintained in the event of an accident (fire, explosion, abrupt accelerations, etc.).

d. Escape From Crew Stations - Crew station openings and egress paths shall be large enough to permit rapid egress.

(Refer to Paragraph 8.6.2.3, Body Envelope Design Considerations, and Section 3.0, Anthropometrics, for body dimension data.)

(Refer to Paragraph 8.8.3, Translation Path Design Requirements, and Paragraph 8.10.3, Hatch and Door Design Requirements, for data to size translation paths.)

e. Emergency Rescue and Return Route - An emergency rescue and return route shall be available for all planned IVA activity areas. The route shall be capable of accommodating an EVA-suited individual.

(Refer to Paragraph 14.5.3.5, EVA Passageway Requirements, for EVA route size.)

f. Dead End Corridors - Dead End Corridors shall be avoided whenever possible.

g. Emergency Regulation and Routes - Emergency traffic regulations and appropriately marked emergency routes shall be established for safe and efficient movement of personnel and equipment.

8.8 TRANSLATION PATHS

{A}

8.8.1 Introduction

{O}

This paragraph contains information for the design of crew translation paths that interconnect interior space module compartments. This information applies to IVA environment and to microgravity conditions.

(Refer to Paragraph 14.5, EVA Mobility and Translation, for information on EVA translation paths.)

(Refer to Paragraph 8.7, Traffic Flow, Paragraph 8.9, Mobility Aids and Restraints Architectural Integration, and Paragraph 8.10, Hatches and Doors, for specific data on the design and location of IVA translation paths, mobility aids and restraints, and hatches and doors.)

8.8.2 Translation Path Design Considerations

{O}

The following factors must be considered when designing translation paths in a space module:

a. Type of Translation Path - The required size and shape of the translation path depend on its function. Functional guidelines for selection of the type of translation path are provided in Paragraph 8.7, Traffic-flow, Figure 8.7.2.1-1. Design considerations for each type of translation path are given below:

1. Pass Through - A pass-through (or tunnel) need only be large enough to permit passage by a crewmember with his or her long axis in the direction of travel. A pass-through is illustrated in Figure 8.8.2-1. By definition, the pass-through need only accommodate an IVA clothed crewmember.

2. Minimal Passageway - A minimal passageway is similar to a pass-through but must accommodate an EVA suited crewmember.

3. Standard Passageway - A standard passageway should accommodate a crewmember in an upright working position or neutral body posture. A standard passageway is illustrated in Figure 8.8.2-1. By definition, the standard passageway need only accommodate an IVA clothed crewmember.

(Refer to Paragraph 3.3.4, Neutral Body Posture, and Paragraph 8.6.2.3, Body Envelope Design Considerations, for neutral body posture size and configuration.)

4. Primary Passageway - A primary passageway is the same as a standard passageway but must accommodate an EVA suited crewmember.

b. Aisle Clearances - Aisles are defined as translation paths that pass crew stations (as shown in Figure 8.8.2-2). In this case the translation path must be located outside the maximum working envelope of the crew station.

(Refer to Paragraph 8.6, Envelope Geometry For Crew Functions, for additional information on crew station envelopes.)

c. Translation of Packages and Equipment - The translation path should be sized to accommodate the largest crewmember and any packages or equipment that must be transported. Both the package size, the manner that the package is to be carried, and acceptable clearances must be considered. See in Figure 8.8.2-3 for illustration.

d. Number of Persons Using Translation Path - The translation path must be sized according to the traffic considerations. Persons often travel in pairs. A busy path may have to be wide enough for four crewmembers: two pairs passing each other.

e. Orientation of the Body - Turning or rotation required to position the body to translate from one path to another path, module, or door requires an increase in the minimum path size. The minimum dimensions of the path will be defined by the body orientation and method of negotiating the path.

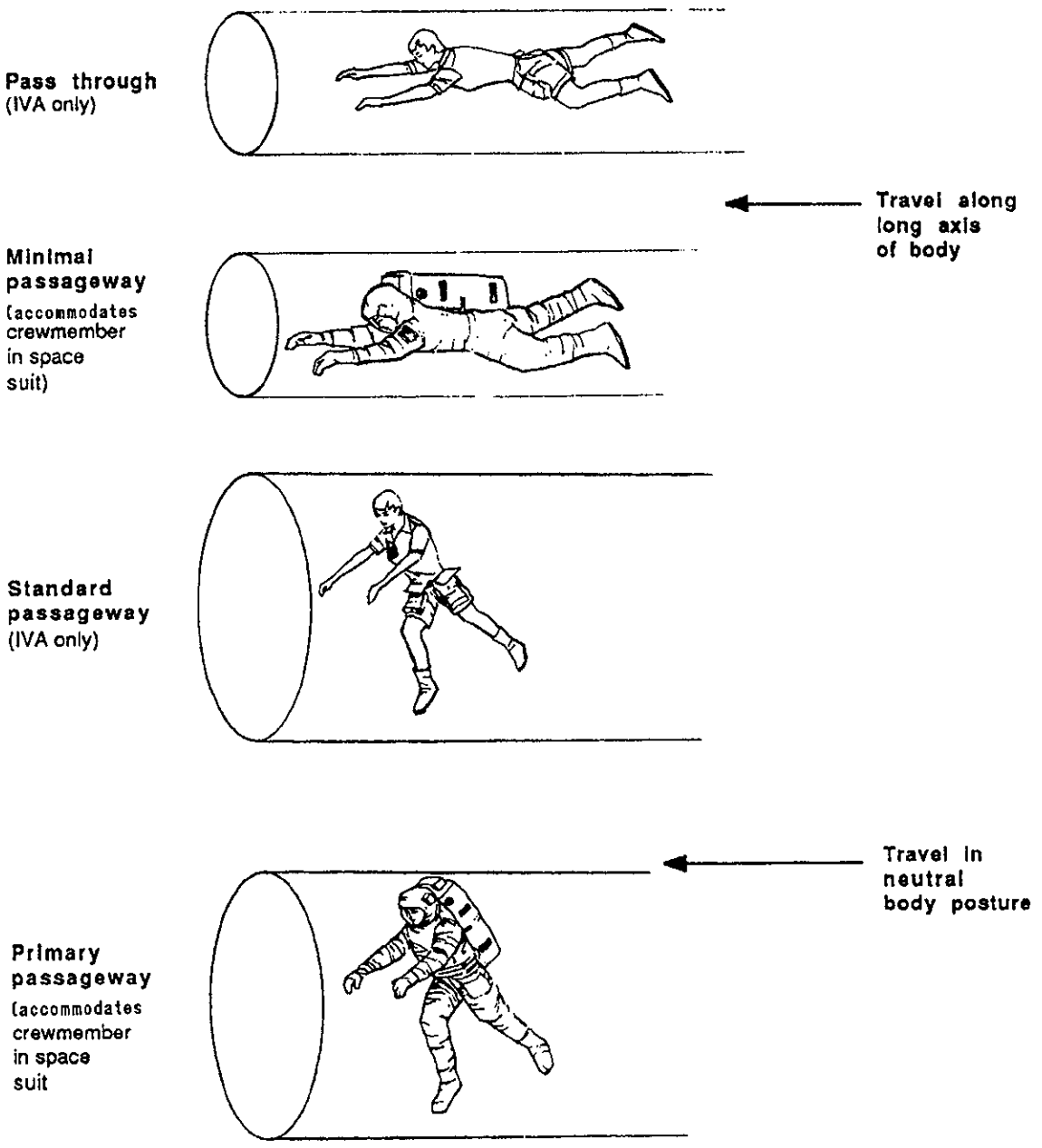

Reference: 250

Figure 8.8.2- 1 . Types of Translation Paths

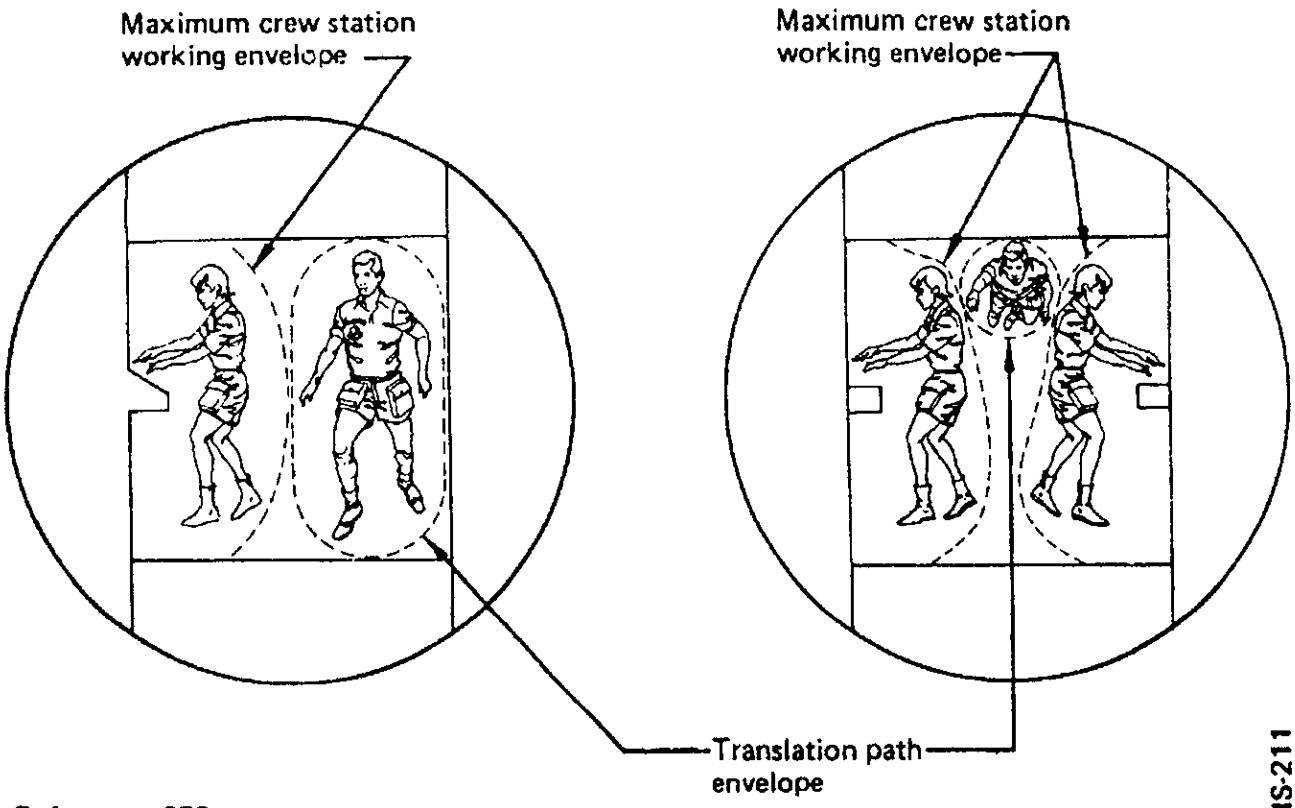

Reference: 250

MSIS-211

Figure 8.8.2-2. Aisles: The Translation Path Envelope Should Not Conflict With the Maximum Crew Station Working Envelope

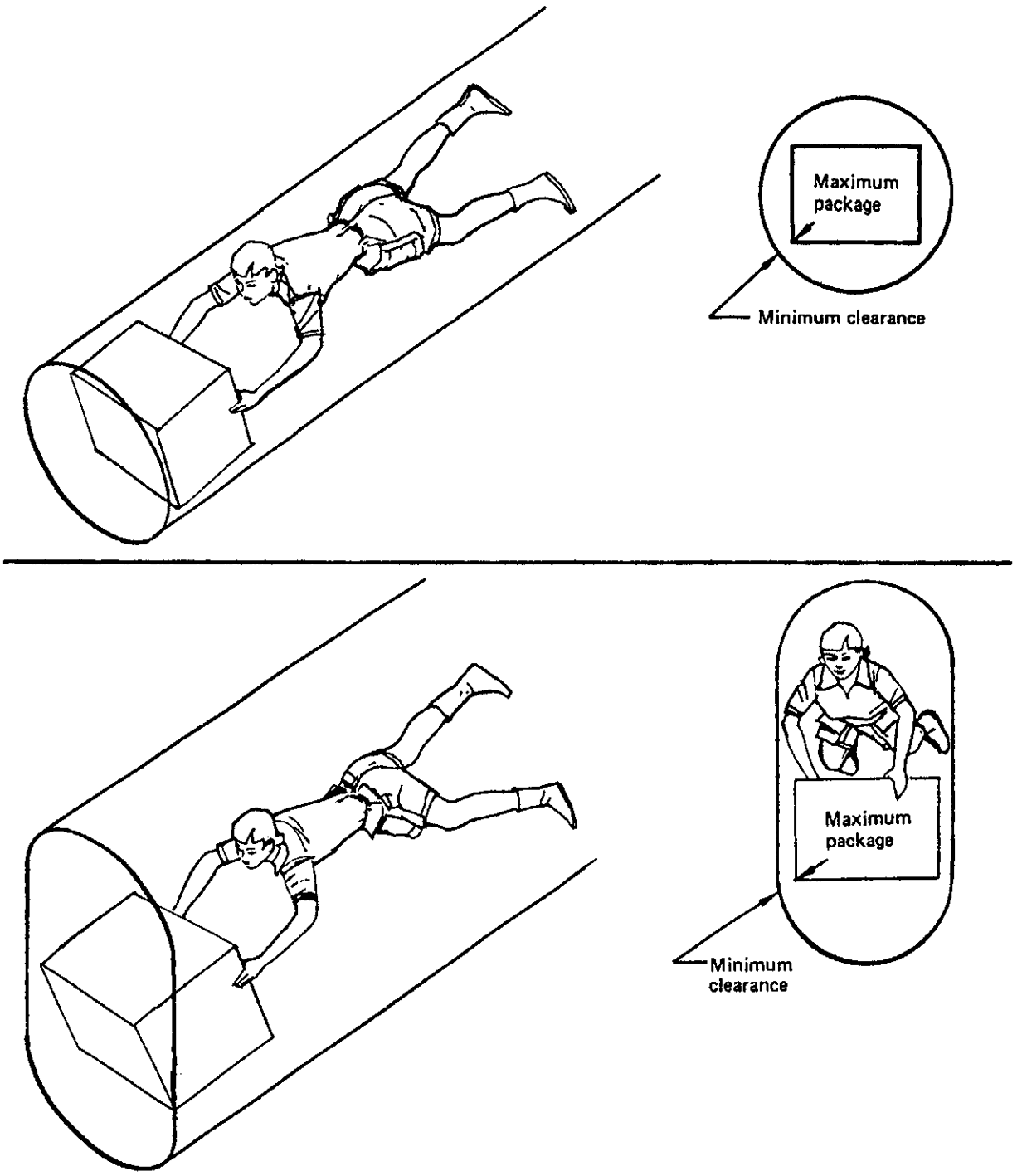

Reference: 250

MSIS-212

Figure 8.8.2-3. Size and Shape of the Translation Path Depends on Package, Manner in Which it is Carried, and Required Clearances

8.8.3 Translation Path Design Requirements
{A}

8.8.3.1 Minimum Translation Path Dimensions Design Requirements
{O}

Minimum cross sectional dimensions of microgravity translation paths for one crewmember in light clothing are shown in Figure 8.8.3.1-1. Translation paths that must accommodate more than one crewmember shall be enlarged by multiples of the single person dimensions.

8.8.3.2 Clearances Design Requirements
{O}

In addition to the minimum dimensions given in Paragraph 8.8.3.1, translation paths shall be designed to provide the following clearances:

a. Equipment or Package Clearances - Translation paths through which equipment or packages must be transported shall allow sufficient clearances for the safety of both the equipment and the space module.

b. Orientation and Directional Change Clearances - Additional clearance volume shall be provided as required for the crewmember to make changes in orientation and/or direction of travel. Refer to the third section of Figure 8.6.2.3-1.

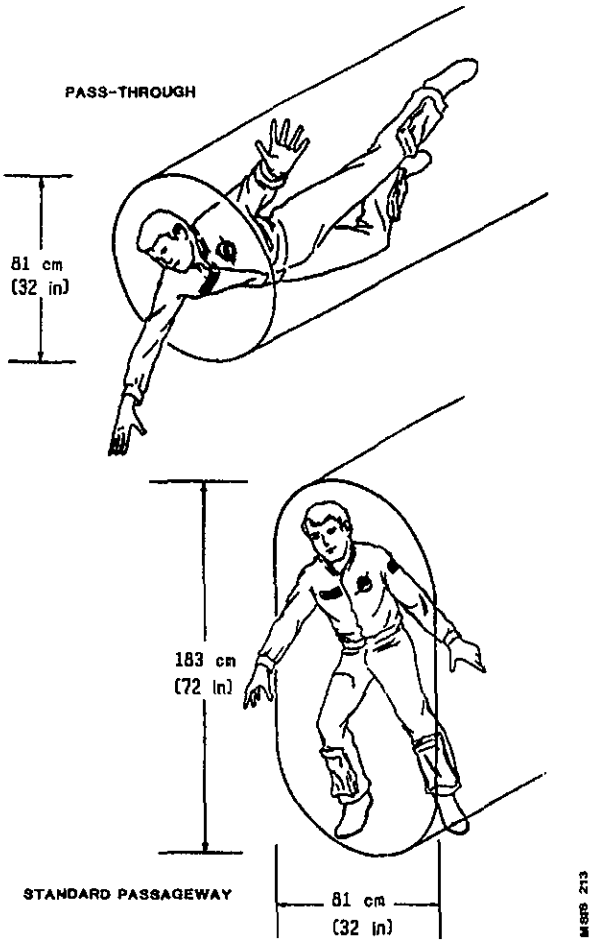

Figure 8.8.3.1-1 Minimum Translation Path Dimensions for Microgravity, One Crew Member in Light Clothing

8.8.3.3 Translation Path Obstructions and Hazards Design Requirements
{A}

The following translation path obstructions and hazards shall be minimized:

a. Injury or Damage From Translation Path Surface - Provide rounded corners, padding, smooth surfaces, and/or eliminate projections to minimize possibility of injury to the crewmember or damage to transferred equipment or space module during translation.

(Refer to Paragraph 6.3, Mechanical Hazards, for details on elimination of these hazards.)

b. Damage to Nearby Equipment - Equipment located near traffic paths may be used as a grasp surface or a surface from which crewmembers propel themselves. It shall therefore be designed to withstand a crew-imposed design load of 556 N (125 lbf) and an ultimate load of at least 778 N (175 lbf).

c. Collisions at Intersections - Intersecting translation paths with heavy traffic flow shall incorporate means to minimize collisions. These means can include mirrors at cross paths, windows in doors, warning lights, or auditory warnings.

d. Obstructions and Entanglements - The translation path and surrounding areas shall be designed to minimize the possibility of entanglement of translating crewmembers or equipment with loose objects such as restraints, cables, hoses, wires, etc.

8.8.3.4 Marking of Translation Paths - Design Requirements

{A}

Emergency translation paths shall be marked in accordance with MIL-A-25165B.

8.9 MOBILITY AIDS AND RESTRAINTS ARCHITECTURAL INTEGRATION

{O}

8.9.1 Introduction

{O}

This section discusses considerations and requirements for locating mobility aids and restraints within the space module architecture. The information applies to microgravity conditions only.

(Refer to Paragraph 9.2.4.2.3, Workstation Restraints and Mobility Aid Design Requiremens, for additional information on the placement of restraints in workstations.)

(Refer to Paragraph 14.4, EVA Workstations and Restraints, and Paragraph 14.5, EVA Mobility and Translation, for information on the use of restraints and mobility aids in the EVA environment.)

(Refer to Paragraph 11.7, Restraints, and Paragraph 11.8, Mobility Aids, for information on the specific design considerations and requirements for restraint and mobility aid hardware design.)

8.9.2 Mobility Aids & Restraints Integration Design Considerations

{O}

8.9.2.1 Location of IVA Mobility Aids Design Considerations

{O}

The following considerations should be observed when locating IVA mobility aids:

a. Method of Use - Previous experience has shown that mobility aids such as hand rails are not used for hand over hand translation. Mobility aids are used primarily for control of body orientation, speed, and stability. After humans gain confidence in free-flight translation, contact with planned fixed mobility aids is primarily at free-flight terminal points or while changing direction. Padding or kick surfaces should be considered at these points.

b. Package Transport and Mobility Aid Use - Consider the packages that the crewmembers might be carrying. One or two hands may be required to negotiate and guide the package.

c. EVA Use in Emergency - IVA mobility aids may have to be used by space suited crewmembers under emergency conditions. The location should, therefore, account for bulky garments that reduce joint movement and clearance.

(Refer to Paragraph 14.5, EVA Mobility Aids and Translation, for additional information.)

d. Substitute Mobility Aids - Walls, ceilings, or any handy equipment item may be used as a mobility aid. Surfaces and equipment along translation paths should, therefore, be designed to accommodate this function.

8.9.2.2 Considerations for Location of IVA Personnel Restraints

{O}

The following considerations should be observed when locating IVA personnel restraints:

a. Operator Stability - Locate restraints where it is critical that a workstation operator remain stable for task performance (i.e., view through an eyepiece, operation of a keyboard, repair a circuit, etc.).

b. Counteracting Forces - Locate restraints where task performance causes the body to move in reaction to the forces being exerted. For instance, a crewmember using a wrench should be restrained from rotating in an opposite direction to the applied torque.

c. Two Hand Task Performance - Some simple tasks can be easily performed with one hand while using the other hand for stability. More complex tasks, however, require coordination of both hands and some body or foot restraint system may be required.

d. Restriction of Drift Into Undesirable Area - Not all restraints are necessary for keeping a crewmember at a station. Sometimes a restraint is necessary to keep the crewmember from drifting into another area. A relaxing or sleeping crewmember, for instance, should be restrained from drifting into a traffic, work, or hazardous area.

e. Location According to Crewmember Size - The restraint should properly position a crewmember at a station. The proper position is dependent on the crewmember size. The restraint should be located so that the smallest and the largest of the defined crewmember population range can perform the task. Restraint adjustment or multiple positions may be necessary.

f. Noninterference - The restraint should not interfere with other tasks. It may be necessary to use a portable restraint and remove it when a station is used for another purpose.

g. Typical Areas Requiring Restraints - Based on the above information, restraints should be considered for the following locations within the space module:

1. Body waste management facility.
2. Exercise area.
3. Sleeping area.
4. Clothes changing locations.
5. Trash handling locations.
6. Airlock.
7. Space suit don/doff area.
8. Housekeeping and cleanup centers.
9. Maintenance areas.
10. Galley and eating areas.
11. Workstations.
12. Space medical facility.

8.9.3 Mobility Aids and Restraints Design Requirements

{O}

8.9.3.1 IVA Mobility Aid Integration Design Requirements

{O}

The following are requirements for integration of fixed IVA mobility aids into the space module architecture:

a. Translation Path Locations - Mobility aids shall be located along translation paths as necessary for crewmembers to initiate

translation movement, terminate translation movement, or change direction or speed.

b. Orientation Requirements - The orientation and location of mobility aids shall be such that approximate body positions normally assumed to perform a task can be attained upon reaching the crew station.

c. Noninterference - Mobility aids shall be located so as not to restrict or interfere with traffic flow or operations at crew stations.

d. Contingency Space Suited Operations - IVA mobility aids shall be sized and located as necessary for contingency space suited operations (i.e., EVA rescue or recovery).

8.9.3.2 IVA Restraint Integration Design Requirements

{O}

The following are requirements for integration of fixed IVA restraints into the space module architecture:

a. Crew Stations - Restraints shall be provided at crew stations where it is important that body positions normally assumed to perform a task be maintained and that normal body movements are accommodated.

b. Areas Where High Force Application is Required - Restraints shall be provided where crewmembers are expected to exert forces that cause the body to move in reaction, thereby degrading task performance.

c. Space Medical Facility - Patient restraints shall be provided in the Space Medical Facility. Restraint location and type shall be adaptable depending on the type and extent of the injuries or incapacitation of the patient and shall permit access for the administration of medical treatment.

d. Undesirable Areas - Restraints shall be provided where necessary to keep a crewmember from drifting into undesirable areas such as a hazardous area, traffic area, or workstation.

e. Noninterference - Restraints shall be located so as not to restrict or interfere with crew operations.

8.9.4 Example of IVA Restraints, Architectural Integration Design Solutions

{O}

The Skylab internal fixed mobility aid locations are shown in Figure 8.9.4-1.

8.10 HATCHES AND DOORS

{A}

8.10.1 Introduction

{A}

This section discusses the design of IVA hatches and doors. Both hatch and door openings and the opening covers are discussed. Only full body access hatches and doors are discussed.

(Refer to Paragraph 14.5, EVA Mobility and Translation, for information on EVA passageways.)

(Refer to Section 12.0, Maintainability, for information on partial body access openings, i.e., arms, hands and fingers.)

(Refer to Paragraphs 11.6, Handles and Grasp Areas, and 11.3, Drawers and Racks, for specific design requirements for hatch and door handles.)

(Refer to Paragraph 8.8, Translation Paths, for additional information on design for translation within the space module.)

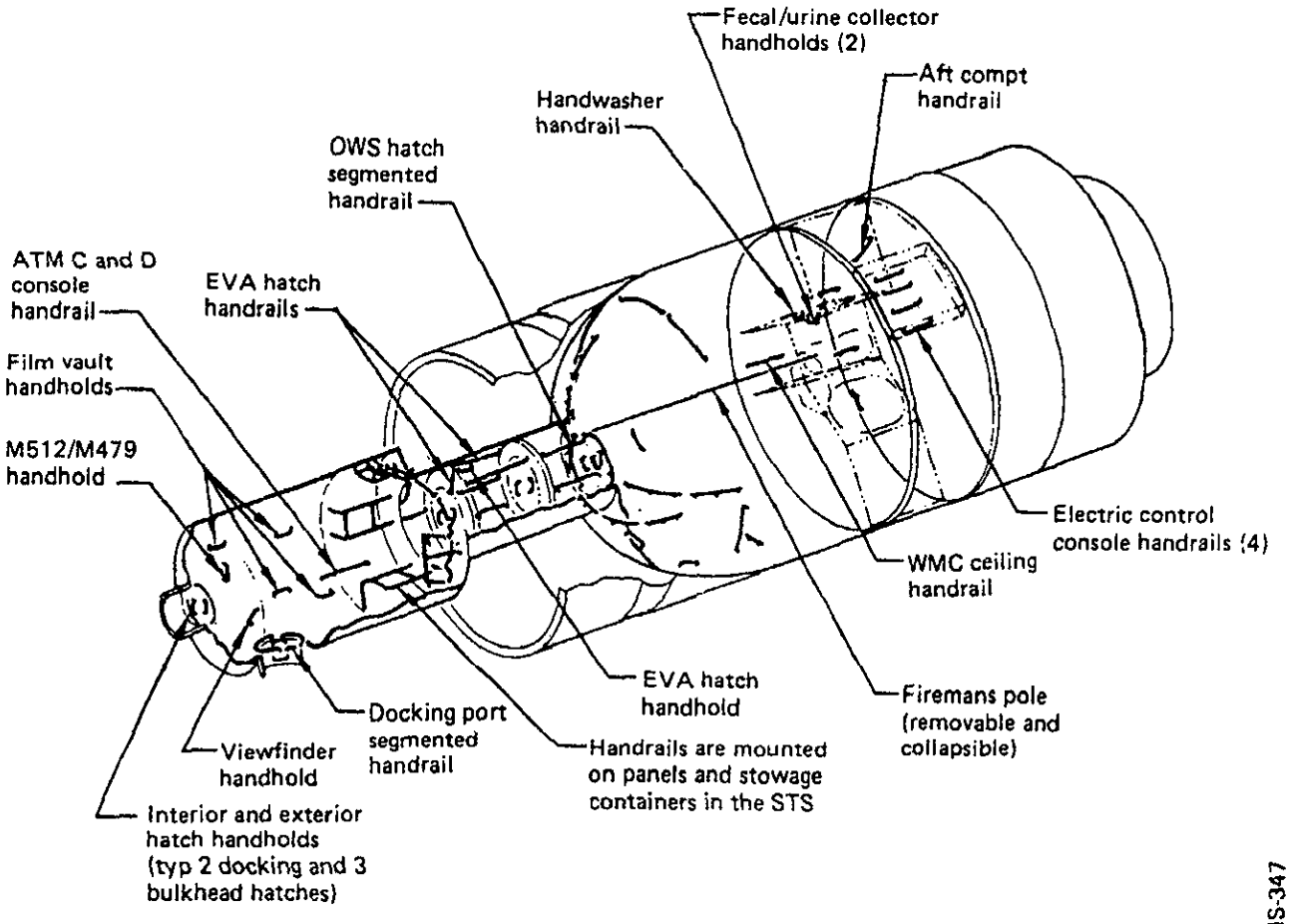

Reference: 1, page 3-59

Figure 8.9.4-1. Skylab Internal Mobility Aid Locations

8.10.2 Hatch and Door Design Considerations

{A}

The following are considerations for the location and design of hatches and doors:

a. Use of the Hatch or Door - The following is a list of the types of hatches and doors and some of their specific design considerations:

1. Pressure Hatch - Although the pressure hatch must be able to withstand high-pressure loads, it must not be too massive or difficult to operate. Due to the criticality of the pressure hatch, operating procedures and hardware must minimize the chance of unsafe operations. Normally, the pressure hatch opening size and controls must be designed to be used by a space suited crewmember. Reliability is enhanced if hatches open toward the higher pressure volume, thus making them essentially self- sealing.

2. Internal Doors - Internal doors may be necessary for visual privacy, reduction of light, reduction of noise, fire barriers, and restraint of loose equipment. The configuration will vary accordingly.

3. Emergency Hatches - Emergency hatches are used primarily for escape or rescue. A dedicated emergency hatch should not interfere with normal activities. In an emergency, however, hatch operation should be simple and quick. Where pressure loss is a possibility, emergency hatch openings must be sized for space suits.

b. Opening Size and Shape - The following considerations should be observed when selecting the hatch and door opening size and shape:

1. Body Orientation - Frequently used hatches and doors should not require body reorientation to pass through. In microgravity conditions, this means that the opening should allow passage of a crewmember in the neutral body posture.

2. User Size - The size of the hatch and door opening should accommodate the largest crewmember plus any equipment to be transported.

3. Space Suited Crewmembers - Generally, internal doors need only be used by IVA crewmembers; in some cases, however, it may be necessary to provide opening room for passage for a space suited crewmember.

(Refer to Paragraph 3.3.1, Body Size Design Requirements, for body size data.)

c. User Strength - The operating forces of the door opening system must be within the strength range of the weakest of the defined crewmember population.

(Refer to Paragraph 4.9, Strength, for specific data.)

d. Traffic Considerations - Internal doors and hatches are points of potential traffic congestion. The following considerations should be made to ease the traffic flow:

1. Do not place doors or hatches near a corner where a translation path junctures with another path and/or where a single path turns the corner. The doorway should be at least 1.5 m (5 ft) from the corner. See Figure 8.10.2-1 for illustration.

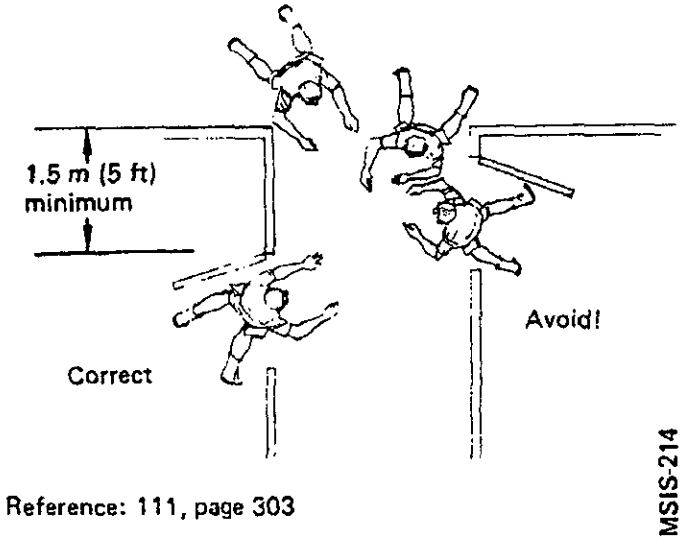

Reference: 111, page 303

Figure 8.10.2-1. Place Door Openings Away From Traffic Congestion

2. Door and hatch covers should not open into congested translation paths. Rather, they should open into the compartment.

3. Door and hatch openings should be sized for the traffic flow. To be efficient, a high use doorway may require an opening to accommodate more than one crewmember at the same time.

8.10.3 Hatch and Door Design Requirements

{A}

8.10.3.1 Location Design Requirements

{A}

Hatches and doors shall meet the following location requirements:

a. Internal Door Placement - Enclosed crew stations shall have entrances/exits to permit unrestricted flow for all anticipated traffic. They shall be located so personnel who are entering or leaving will not interfere with surrounding operations or traffic flow.

b. Away From Hazards - In compartments with a single ingress/egress, the opening shall not be located near flammable, explosive, or otherwise hazardous substance such that the energy content, if released, will result in damage that prevents access through the entrance.

c. Emergency Passage - Capability should be provided to allow emergency exit and rescue entry into a compartment. This may require two or more entrances into a compartment and/or a pressure hatch.

8.10.3.2 Pressure Hatch Indicator/Visual Display Design Requirements

{A}

Pressure hatch covers shall have the following visual displays and indicators:

a. Visual Inspection of Hatch Security - A means shall be provided on both sides of the pressure hatch for visual safety check to ensure that it has been secured properly.

b. Remote Status Display - Pressure differentials and hatch operational status displays shall be provided as necessary for safety at appropriate space module command and control center(s).

c. Pressure Difference Indicators - Pressure hatches shall have pressure difference indicators visible on both sides of the hatch.

d. Windows - All airlock hatches shall have windows for visual observation of all decompression operations with a minimum of blind spots inside the airlock.

(Refer to Paragraph 11.11.3, Window Design Requirements, for detailed window design specifications.)

e. Operating Instructions - All pressure hatches shall display operating procedures on both sides of the hatch.

(Refer to Paragraph 9.5.3.1.8, Operating Instruction Design Requirements.)

8.10.3.3 Opening and Closing Mechanisms Design Requirements

{A}

The hatch and door opening and closing mechanisms shall meet the following design requirements:

a. Emergency Operation - Latching mechanisms shall provide for emergency operation in case of a latching system failure.

b. EVA Operation - All opening/closing mechanisms shall be operable by a pressure-suited crewmember.

c. Operation From Both Sides - Hatches shall be capable of being operated, locked, and unlocked from either side.

d. Interlock - Pressure hatches shall be prevented from unlatching prior to pressure equalization.

e. Single Crewmember Operation - Hatches shall be capable of being operated by one crewmember.

f. Parts Tethering - All safety pins or other detachable parts required for the opening/closing shall be tethered and able to be stowed.

g. Emergency Closing - Hatches and doors shall allow crewmembers to close covers with or against pressure differentials, for the worst case pressure differential anticipated.

h. Rapid Closing - Hatches used to isolate interior areas of the space module shall be designed to allow rapid closing.

8.10.3.4 Operating Forces Design Requirements

{A}

Hatch and door cover operating forces shall meet the following requirements:

a. Emergency Operation - Forces for emergency manual backup operation or breakaway of jammed internal hatches and doors shall not exceed 445 Newtons (100 lbs).

b. Latch Operations - The force required to operate door and hatch latches shall not exceed the strength of the fifth percentile design population as defined in Paragraph 4.9.3.

(Refer to Paragraph 4.9.3, Strength - Design Requirements, for strength data.)

c. Open/Close Force - The opening and closing forces for internal hatches and doors shall not exceed 22 Newtons (5 lbf) assuming zero delta-pressure through the opening.

d. Restraints - Restraints shall be provided as necessary to counteract body movement when opening or closing the hatch.

8.10.3.5 Minimum Size Design Requirements

{A}

The minimum size of personnel hatch and door openings shall accommodate passage of the largest replacable module or the 95th percentile male crewmember (whichever is larger) intended to pass through the opening.

8.10.3.6 Door and Hatch Shape Design Requirements

{A}

Doors and pressure-sealing hatches shall be shaped such that they can pass through the opening into which they are designed to fit/seal to allow for removal, maintenance, repair, relocation, etc.

The location and operation of crew interfaces (gauges, levers, valves, handles, etc.) for hatches in all pressurized elements shall be visually and functionally identical. This shall include the procedures and protocols for opening, securing, closing, statusing and performing maintenance.

8.10.3.7 Shape

{A}

The hatch should be shaped such that it can pass through the opening that it is designed to seal to allow for removal, maintenance, repair, relocation, etc.

8.10.4 Hatch and Door Design Solutions

{A}

The Shuttle hatch, with one flat side, is a good example of a hatch shape which will allow removal of the outward swinging hatch from within the craft.

8.11 WINDOWS INTEGRATION
{A}

8.11.1 Introduction
{A}

This section covers the integration (i.e., the placement and location) of windows with the overall architecture of the space module.

(Refer to Paragraph 11.11, Windows, for requirements and considerations for window detail design and construction.)

(Refer to Paragraph 9.2.5.1, Window Workstations, for information on the design and interface of windows used with workstations.)

8.11.2 Windows Integration Design Considerations
{A}

8.11.2.1 Location of Windows Within Space Module Design Considerations
{A}

The following are considerations that should be observed when locating windows within the space module:

a. Functional Considerations - Figure 8.11.2.1-1 shows possible uses of the space module window and the effect of the use on the location of the window within the space module.

Window functions	Location considerations
Proximity operations	
• Coordination of docking and berthing of other modules	• Near module workstations with communications, control displays, video backup, etc. (refer to Paragraph 9.2.5.1, Window Workstation)
• Monitor and support of EVA personnel	• Location to provide a clear, stereoscopic view of EVA operations
• Teleoperation of EVA equipment	
Earth/celestial observations	
• Discovery and documentation of unpredicted features and events.	• Near scientific workstations
• Scientific research and experimentation.	• Away from high traffic volume (refer to Paragraph 8.7, Traffic Flow)
Support of crew morale	
• Offset claustrophobic effects of tightly confined, long-term isolation.	• Near recreational, socialization areas.
• Provide recreational and awe-inspiring experiences.	• Near areas of boring, monotonous tasks (exercise, for instance).
• Enable photography	• Near private quarters.
• Provide educational benefits	• Location to provide view of Earth (if possible) or other interesting celestial sight
• Provide a psychological link to the home planet.	
• Afford natural illumination and day/night cycles.	

MSIS-180

Reference: 322, page 2, 3

Figure 8.11.2.1-1. Functional Considerations for Location of Window Within a Module

b. Traffic - The windows should be located so that use of windows will not interfere with required traffic flow.

c. Light and Glare - The following are lighting and glare considerations for window location:

1. Glare on window - Bright interior illumination could reflect from the window surface and degrade visibility.

2. Dark adaptation for celestial viewing - Bright interior illumination may degrade dark adaptation required for celestial viewing.

3. Light sensitive activities - Exterior light through windows could degrade light sensitive activities such as sleeping, use of CRT displays, or tasks requiring dark adaptation.

4. Natural light and calcium loss - Calcium loss from bones in microgravity is a problem of major concern. Since vitamin D obtained from certain wavelengths of natural sunlight facilitates absorption of calcium by the gastrointestinal tract, it is postulated that provided by controlled crew exposure to appropriately designed and located windows.

(Refer to Paragraph 7.2.3 Reduced Gravity Countermeasures, for additional information about microgravity effects.)

5. Destruction of bacteria with natural light - A window could be located so that the light could be used against the growth of pathogenic bacteria.

6. Use of natural light for illumination - A properly designed and located window can use natural sunlight as a supplementary source of internal space module illumination.

8.11.2.2 Window Configuration Design Considerations

{A}

The following are considerations for the design of the window and the surrounding area:

a. Anthropometrics and Neutral Body Posture - The window must be placed on the line of sight of the user. The size range of the users must be considered. In microgravity conditions the neutral body posture must be accommodated.

(Refer to Section 3.0, Anthropometrics, for data on body dimensions, line of sight, and the neutral body posture.)

b. Total Visual Field - The total visual field out the window must be compatible with the task of the viewer. Calculate the total visual field using the following dimensions:

1. Window width.

2. Bezel thickness.

3. Distance of the viewer from the window.

4. Lateral offset.

These dimensions are illustrated in Figure 8.11.2.2-1 along with the factors that affect them.

c. Window Shape - In proximity operations, cues to establish viewer or target orientation are important. A square or rectangular window with flat frame edges can provide the viewer with orientation cues. Round windows do not provide these cues.

d. Restraints - Body restraints compatible with the viewing task must be provided for microgravity conditions. The restraints should allow the full size range of users to position themselves for viewing.

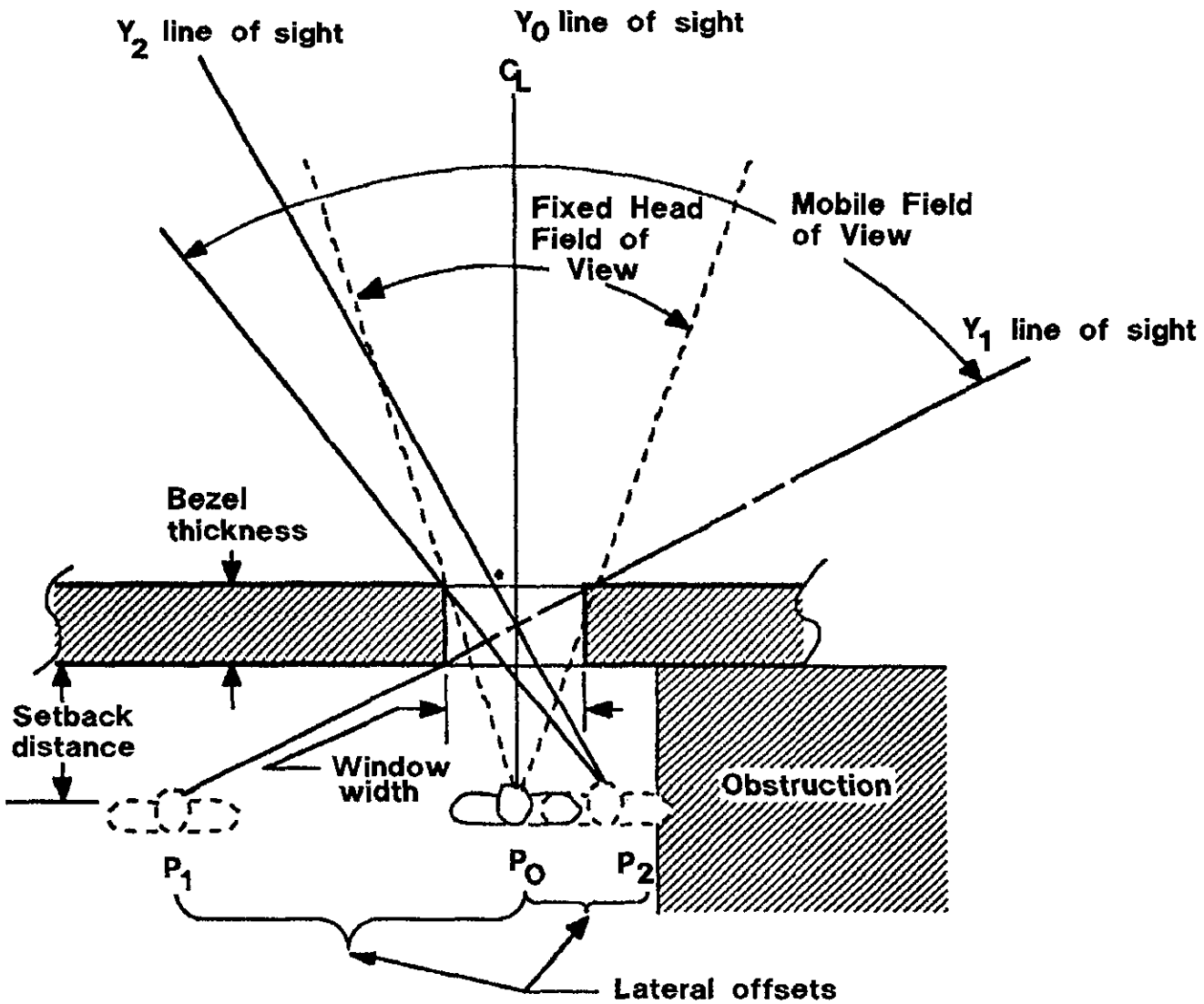

Dimension	Factors affecting dimension
Bezel thickness Window width	• Window hardware design
Set-back distance	• Body dimensions of viewer • Size of workstation console or other equipment around window
Lateral offset	• Number of viewers • Obstructions around window area • Viewing requirements of task (i.e., target acquisition time)

Reference: 323, page 7 With Updates

MSIS181 Rev. B

Figure 8.11.2.2-1 Calculation of Visual Angle From Window

e. Protection of the Window Surface - In a microgravity environment, crewmembers are able to use all exposed surfaces for stabilization and mobility. Care should be taken in designing and locating the window to ensure that it is not damaged by the crew during translation.

f. Space Module Windows - Windows located in the habitation module should be used primarily for crew recreation and observation during off-duty periods.

8.11.3 Window Integration Design Requirements

{A}

The following are requirements for the architectural integration and design of windows:

a. Required Windows - Properly located and sized windows shall be provided for the following functions:

1. Off duty recreational viewing by the crewmembers.

2. As necessary for interface with EVA activities.

3. To support proximity operations.

4. To support external inspection of adjacent modules, structures, and/or other spacecraft.

5. As necessary for scientific celestial or Earth observations.

6. For observation of decompression through airlock and pressure hatch covers. Windows shall be located and configured with minimum blind areas inside the decompression area. Windows shall allow a 90° field of view for an eye reference point located along a normal to the window opening. This normal passes through the geometric center of the opening. This reference point shall be located half the window opening dimension from the inner pane.

b. Adequate Space Around Windows - The architectural arrangement of equipment near the windows shall allow adequate space for the performance of designated operational, maintenance, and recreational tasks by suitably clothed crewmembers representing the significant body dimensions applicable to access clearance.

c. Restraints - Restraints shall be provided in microgravity conditions when necessary for window task performance.

d. Compatibility With Adjacent Area

1. Lighting - Provisions shall be made to preclude reductions in visual capability of all viewers using a window(s) due to both internal and external light sources.

2. Glare - Reflected glare or ghost imaging shall not degrade the visual performance of the viewer or surrounding crew activities.

3. Internal light sources shall be positioned so as to preclude reductions in viewer visual capability while using windows.

e. Window Attachments - The following accommodations shall be provided so as to impose minimal interference with nominal crew window activities:

1. Mounting/Pointing/Aligning Fixtures that are:

(a) temporary

(b) unobtrusive (visually as well as physically)

(c) easy to install and use

(d) easy to remove during periods of non-use

2. Interfaces with space module power, communication (including voice), data, and lighting systems in the proximity.

8.12 INTERIOR DESIGN AND DECOR

{A}

8.12.1 Introduction

{A}

This section provides interior design and decor considerations and requirements that relate to the selection of colors, textures, lighting, materials, furnishings, and decorative accessories that have impact on the aesthetic quality of space module habitability, especially for long duration missions.

8.12.2 Interior Design and Decor Design Considerations

{A}

8.12.2.1 General Interior Decor Design Considerations

{A}

The following are general considerations for the design of the interior decor:

a. Simplicity - Interior design (decor) should be simple, i.e., too many colors, complicated visual patterns, large areas of extremely saturated colors or too many fabric variations may result in visual or sensual oversaturation. Such treatment becomes an annoyance to most observers, especially over long periods of exposure.

b. Variety - Extreme simplicity can be carried too far. Drab, singular color or completely neutral (e.g., all gray) color schemes and smooth, untextured surfaces are monotonous and lead to boredom and eventual irritation with the bland quality of the visual environment. The best interior design schemes are a balance of variety and simplicity.

c. Personalization - The ability of a crewmember to personalize certain portions of her or his environment is often a morale booster. This option should be limited to an individual's personal quarters. A simple feature could be a simple bulletin board on which the crewmember could display personal photos or other memorabilia.

d. Maintenance of Decor - Use of a wide variety of colors, textures, materials, and accessories can exaggerate housekeeping, repair, and replacement problems.

8.12.2.2 Decorative Technique Design Considerations

{A}

Decorative techniques to be considered are as follows:

a. Colored Surfaces - A variety of color schemes may be developed using wall coverings, paint, or treated metal surfaces. The following are considerations to be observed when using color:

1. Color variety - The use of different schemes for different compartments within the habitat is an effective way to achieve variety. Within each compartment, the general use of a small variety of color (no more than 4 to 5) is preferred over a single color. Variety can also be obtained by using slightly different tints and shades of the basic surfaces, another for equipment racks, and another for control panels.

2. Reflectance - Color affects the amount of light reflected from a surface. Diffused reflectance is desirable, especially at workstations. High reflectance can cause annoying glare.

(Refer to Paragraph 8.13, Lighting, for surface reflectance requirements and considerations.)

3. Color by light source - Providing surface color by light sources for the purpose of interior aesthetics should be avoided.

4. Effects on color by common lamps - The two matrices in Figure 8.12.2.2-1 give a general description of the effects that common fluorescent, mercury, and filament luminaries have on colored surfaces. Both the lighting level and the color of the light affect the appearance of colored surfaces. Filament lamps and warm fluorescent lamps, which are deficient in blue, emphasize the redness of a surface color and thus accent warm hues.

5. Preferred colors - Figure 8.12.2.2-2 provides an aid for the selection of preferred colors for different crew areas. Selected colors should be matched with those in Reference 290.

6. Location and orientation coding - In some cases the use of color may be useful in helping the crewmember to more quickly identify the room type or their orientation in the rooms. Lighter colors may be used as a cue to indicate designed for a local vertical.

(Refer to Paragraph 8.5, Location Coding, for additional information.)

b. Texture - Variety on wall or other surfaces can be obtained through use of textured wall coverings. Texture adds another dimension of variety to the decor. The following are considerations to be observed when using texture:

1. Aesthetics - Some fine, regular patterning of coverings is acceptable. Gross irregular patterns are generally not pleasing and should be avoided.

2. Noise control - Rough textures reduce noise levels better than smooth textures.

(Refer to Paragraph 5.4, Acoustics, for additional information on the control of noise.)

3. Glare reduction - Rough textures diffusely scatter incident light and may be useful in glare reduction.

4. Location coding - Changes in texture may be used to delineate a subdivision of the interior space. This can be used to increase perceived privacy and territorially.

5. Cleaning - Smooth and plain surfaces are easy to clean; however, a small amount of dirt can make them appear unattractive.

c. Decorative Accessories - Decorative accessories should be considered as long as they are consistent with functional requirements and environmental constraints. Decorative accessories include curtains, simulated woodgrain work surfaces, and simulated leather or fabric covers for certain furnishings.

d. Flexibility - Ease of changing decor should be considered. Decor might be changed during long missions, as crews are replaced during normal rotation, or when the space module needs to be refurbished. Plans for such change or rehabilitation should be included in the initial design so that changes can be accomplished with minimum effort, time, cost, and interference with on-going operations. As an example, techniques for quick removal and replacement of wall and ceiling structural coverings should be considered to vary color schemes as well as replace worn or damaged coverings.

e. Lighting - Variation in lighting quantity, direction, brightness, and predominant wavelength may be utilized to influence perceived spaciousness and create visual variety.

Color Effects of White Fluorescent Lamps

	Cool white	Deluxe cool white	Warm white	Deluxe warm white	Daylight	White	Soft white-natural
Lamp appearance; effect on neutral surfaces	White	White	Yellowish white	Yellowish white	Bluish white	Pale yellowish white	Pinkish white
Effect on "atmosphere"	Neutral to moderately cool	Neutral to moderately cool	Warm	Warm	Very cool	Moderately warm	Warm, pinkish
Colors strengthened	Orange, yellow, blue	All nearly equal	Orange yellow	Red, orange, yellow, green	Green blue	Orange, yellow	Red, orange
Colors grayed	Red	None appre-ciably	Red, green, blue	Blue	Red, orange	Red, green, blue	Green blue
Remarks	Blends with natural daylight	Best over-all color rendition; simulates natural daylight	Blends with incandescent light	Excellent color rendition; simulates incandescent light	Usually replaceable with cool white	Usually replaceable with cool white or warm white	Usually replaceable with deluxe cool white or deluxe warm white

Color Effects of Mercury and Filament Lamps

	Mercury	White mercury	Color-improved mercury	Deluxe white mercury	Filament
Lamp appearance; effect on neutral surfaces	Greenish blue white	Greenish white	Yellowish white	White	Yellowish white
Effect on "atmosphere"	Very cool, greenish	Moderately cool, greenish	Warm, yellowish	Moderately cool	Warm
Colors strengthened	Yellow, green, blue	Yellow, green, blue	Yellow, green	Orange, yellow, blue	Red, orange, yellow
Colors grayed	Red, orange	Red, orange	Blue	Green	Blue
Remarks	Poor overall color rendering		Color rendering often acceptable, but not equal to any white fluorescent	Color rendering good; compares favorably with deluxe cool white fluorescent	Excellent color rendering; tends to yellow when dim

MSIS-259

Reference: 111, pages 834 and 835

Figure 8.12.2.2-1. Color Effects of Various Lamps

Space module areas	Only use these colors in small amounts or as trim in areas indicated with dot																									Use in any amounts in areas indicated with dot														
	Pale pink	Reddish pink	Red	Red orange	Maroon	Orange	Apricot	Yellow orange	Chamois	Yellow	Yellow green	Green	Blue green	Blue	Violet	Royal blue	Purple	Magenta	Reddish brown	Buff	Burnt sienna	Brown	Olive drab	Grey	Dark gray	Black	Champagne	Cinnamon	Beige	Salmon	Peach	Straw	Ivory	Cream	Maise	Pale yellow	Pale green	Pale blue	Lavender	White	Off white	Light gray
Living areas																																										
• Rest area/crew quarters	•					•	•	•	•	•	•	•	•	•	•	•			•	•	•	•					•	•	•	•	•	•	•	•	•	•	•	•	•	•	•	
• Recreation	•	•	•	•	•	•	•	•	•	•	•	•	•	•	•	•	•	•	•	•	•	•		•	•		•	•	•	•	•	•	•	•	•	•	•	•	•	•	•	•
• Lounge	•	•	•	•	•	•	•	•	•	•	•	•	•	•	•	•	•	•	•	•	•	•	•	•	•		•	•	•	•	•	•	•	•	•	•	•	•	•	•	•	•
• Personal hygiene, shower	•	•		•		•	•	•	•	•	•	•	•	•		•				•		•					•	•	•	•	•	•	•	•	•	•	•	•		•	•	•
• Passageways						•	•	•	•	•	•	•	•	•		•			•	•	•	•		•	•		•	•	•	•	•	•	•	•	•	•	•			•	•	
Work areas																																										
• General workstations							•	•	•	•	•	•	•	•		•			•	•	•	•		•			•	•	•			•	•	•	•	•	•	•		•	•	•
• Data processing						•	•	•	•	•	•	•	•	•		•			•	•	•	•		•	•		•	•	•	•	•	•	•	•	•	•	•	•		•	•	•
• Communications						•	•	•	•		•	•	•	•		•			•	•	•	•		•	•		•	•	•	•	•	•	•	•	•	•	•	•		•	•	•
• Maintenance													•	•		•				•								•	•			•	•	•	•	•		•		•	•	•
• Mechanical equipment/ power generation													•	•		•			•	•	•	•		•				•	•			•	•	•	•	•		•		•	•	•
• Security									•	•	•	•	•	•		•			•	•	•	•		•				•	•	•	•	•	•	•	•	•	•	•		•	•	•
• Logistics									•	•	•	•	•	•		•			•	•	•	•		•	•			•	•	•	•	•	•	•	•	•	•	•		•	•	•
• Administration					•	•	•	•	•	•	•	•	•	•		•		•	•	•	•	•			•		•	•	•	•	•	•	•	•	•	•	•	•		•	•	•
Food Preparation and serving																																										
• Kitchen			•			•	•	•	•	•	•					•			•	•	•	•	•				•	•	•	•	•	•	•	•	•		•		•	•	
• Dining					•	•	•	•	•	•	•					•			•	•	•	•	•				•	•	•	•	•	•	•	•	•	•		•		•	•	•
Service areas																																										
• Laundry						•	•	•	•	•	•	•	•	•		•				•					•			•	•	•	•	•	•	•	•	•	•	•		•	•	•
• Health maintenance										•	•	•	•	•															•	•	•	•	•	•	•	•		•		•	•	•
Assembly areas																																										
• Conference/briefing			•		•	•	•	•	•	•	•	•	•	•		•			•	•	•	•		•	•		•	•	•	•	•	•	•	•	•	•	•	•		•	•	•
• Training						•	•	•	•	•	•	•	•	•		•			•	•	•	•		•			•	•	•	•	•	•	•	•	•	•	•	•		•	•	•
Storage areas																																										
• Food storage							•	•	•	•																			•				•	•	•					•	•	•
• General Storage/supplies												•	•																•				•	•	•					•	•	•

MSIS-182

Reference: 111, pages 834-5

Note:
The use of saturated (high chroma) or dark (low value) colors shall be restricted to small amounts.

Figure 8.12.2.2-2. Color Recommendations

8.12.2.3 Psychological Effects Design Considerations

{A}

There are several psychological effects of color and light that should be considered in space module habitat design.

a. Compartment Spaciousness - Color can effect perceived spaciousness. The primary qualities of color that effect spaciousness are brightness (lightness) and saturation. There are small receding and advancing effects due to hues, but these effects are secondary to brightness and saturation. The following color scheme will help to maximize spaciousness:

1. Keep boundary surfaces at high brightness and low saturation.

2. Color interior partitions at medium brightness and medium saturation.

3. Accent elements at either medium or low brightness and high saturation.

4. Color protruding elements the same as the boundary surfaces.

(Refer to Paragraph 8.6, Envelope Geometry for Crew Functions, for additional information on spaciousness.)

b. Perceived Temperature - Some investigators claim that perceived temperature can be influenced by color and texture. Hue is by far the most important dimension of the color for this effect. Perceived temperature can also be strongly enhanced by texture. The reported effects of color and texture on perceived temperature are listed below:

1. Warmth - Warm colors (red, yellow, pink, brown, etc.) and highly textured surfaces.

2. Coolness - Cool colors (green, violet, blue, etc.) and polished surfaces.

c. Psychological Response to Light - The psychological response to light is a combined function of its amount, directionability, and power spectrum, and their suitability for different types of activities. Good lighting design incorporates more than a simple concern for illumination of a visual task.

(Refer to Paragraph 8.13, for task lighting requirements.)

d. Stress Reduction - Certain interior decor features such as pictures or panel coverings with natural/naturalistic themes may aid in stress reduction for occupants.

8.12.2.4 Materials Design Considerations

{A}

Durability, nonflammability, and safety are all considerations for the selection of materials for interior decor. The materials should not impart chemical, mechanical (abrasive surfaces, sharp corners, edges, etc.), or any other hazard to the crew.

8.12.3 Interior Design and Decor Design Requirements

{A}

The following are requirements for the interior design and decor of the space module:

8.12.3.1 Aesthetic and Psychological Requirements

{A}

The aesthetic and psychological response of the crew shall be a consideration in the selection of the space module interior design and decor.

8.12.3.2 Decor Flexibility

{A}

The interior decor shall be capable of being changed with a minimum of resource expenditure.

8.12.3.3 Color Selection

{A}

The following are requirements for the use of color in the space module interior:

1. Use of dark or saturated colors - The use of dark (low brightness) or saturated colors shall be restricted to small areas, (e.g., handrails, display frames, etc.).

2. Color variety - An enclosed space that is frequently occupied shall not be a uniform color throughout.

3. Colors in eating and grooming areas - Color schemes for eating and grooming areas shall consist of colors that enhance the appearance of food and a person's skin color.

8.12.3.4 Decor Cleaning and Maintenance

{A}

All surfaces shall be easily cleaned and maintained.

8.12.3.5 Decor Durability

{A}

Decor materials shall be resistant to abrasion, scratching, and the absorption of undesirable contaminants, spilled chemicals, grease, body excretions, fungi, moisture, direct sunlight, ozone, airborne particles, cleaning and decontamination agents.

8.12.3.6 Safety

{A}

The use of hazardous materials shall be minimized; those used shall meet the applicable requirements specified in NHIB 8060.1B, Flammability, Odor and Offgassing Requirements and Test Procedures for Materials Used in Environments That Support Combustion (J8400003). Materials and components subject to insidious degradation in the space module ionizing environment shall not be used where that degradation can cause or contribute to any crew hazards.

(Refer to Section 6.0, Crew Safety, for detailed safety requirements.)

In the event of fire, the interior walls and secondary structures within space module shall be self-extinguishing.

8.13 LIGHTING

{A}

8.13.1 Introduction

{A}

This section discusses and defines the overall lighting requirements for the interior of the space module.

(Refer to Paragraphs 14.4.2.4, EVA Workstation Lighting Design Considerations, and Paragraph 14.4.3.3, EVA Workstation Lighting Design Requirements, for EVA lighting considerations and requirements.)

(Refer to Paragraph 9.2.2.2.1, Workstation Illumination Design Requirements, for workstation control panels and displays lighting requirements.)

(Refer to Paragraph 4.2, Vision, for a discussion of the human eye and its response to light.)

8.13.2 Lighting Design Considerations

{A}

Space module lighting systems should be designed to optimize viewing conditions for all mission activities. This will vary from very gross visual requirement (such as seeing to move about) to very critical visual tasks that require discrimination of color codes, seeing fine detail an instruments, or detection of dim objects or planetary detail at night. The key factors to consider are:

a. Color of light source.

b. Intensity of light.

c. Placement of light sources.

d. Distribution of light.

e. Characteristics of task materials.

f. Observer's dark/light adaptation level requirements.

g. Psychological factors.

8.13.2.1 Color of Light Source Design Considerations

{A}

White light sources should be used for most nominal work and living space areas because this makes people and things look natural and allows use of special surface color codes to be recognized. Designers should strive to utilize interior lighting that approximates the full spectral range of sunlight.

Red lighting should be considered where it is necessary for a crewmember to remain dark adapted. An example would be when the crewmember has to look out of a window (at night), but also read instruments inside the space module.

8.13.2.2 Lighting Intensity Design Considerations

{A}

Light level or intensity should be sufficient to allow the crewmembers to perform their visual tasks efficiently, but not so high as to create glare sources. Generally, the more detailed or long duration the task, the higher the illumination should be. Each lighting system should be dimmable to allow crewmembers to optimize their viewing conditions.

8.13.2.3 Placement of Sources Design Considerations

{A}

Light sources should be placed according to what they are intended to illuminate, i.e., surfaces, objects, people, instruments, documents or signs. They should not shine in crewmember's eyes, or cause serious reflections that could degrade visual task performance. Supplemental lighting should be provided for personnel performing specialized visual tasks in areas where fixed illumination is less than the minimum required.

8.13.2.4 Light Distribution Design Considerations

{A}

As a general rule, illumination in work and living spaces should eliminate glare and shadows that interfere with prescribed tasks. The following are three important factors of light distribution and some of the exceptions to this general rule:

a. Ambient Light - Ambient light for general, gross illumination should be distributed so as to enhance the appearance (e.g., spaciousness) and functional performance of an interior volume.

b. Supplemental Light - Supplemental light may be required for local illumination of a special task.

c. Self Illuminated Displays - Self-lit or luminous displays such as a CRT may require a reduction of illumination.

The operator should be provided with a control over each type of light where practical.

8.13.2.5 Characteristics of Task Materials Design Considerations

{A}

Different materials and surfaces react differently to various lighting techniques. Slick, glossy materials, instrument covers, windows and painted surfaces tend to create reflection and glare problems. Reduction of such problems requires consideration of the type and positioning of light sources, control of illumination level, and possible use of anti-reflection coatings. Whenever possible avoid glossy, highly-polished surfaces. Figure 8.13.2.5-1 gives typical reflectance values for various surfaces.

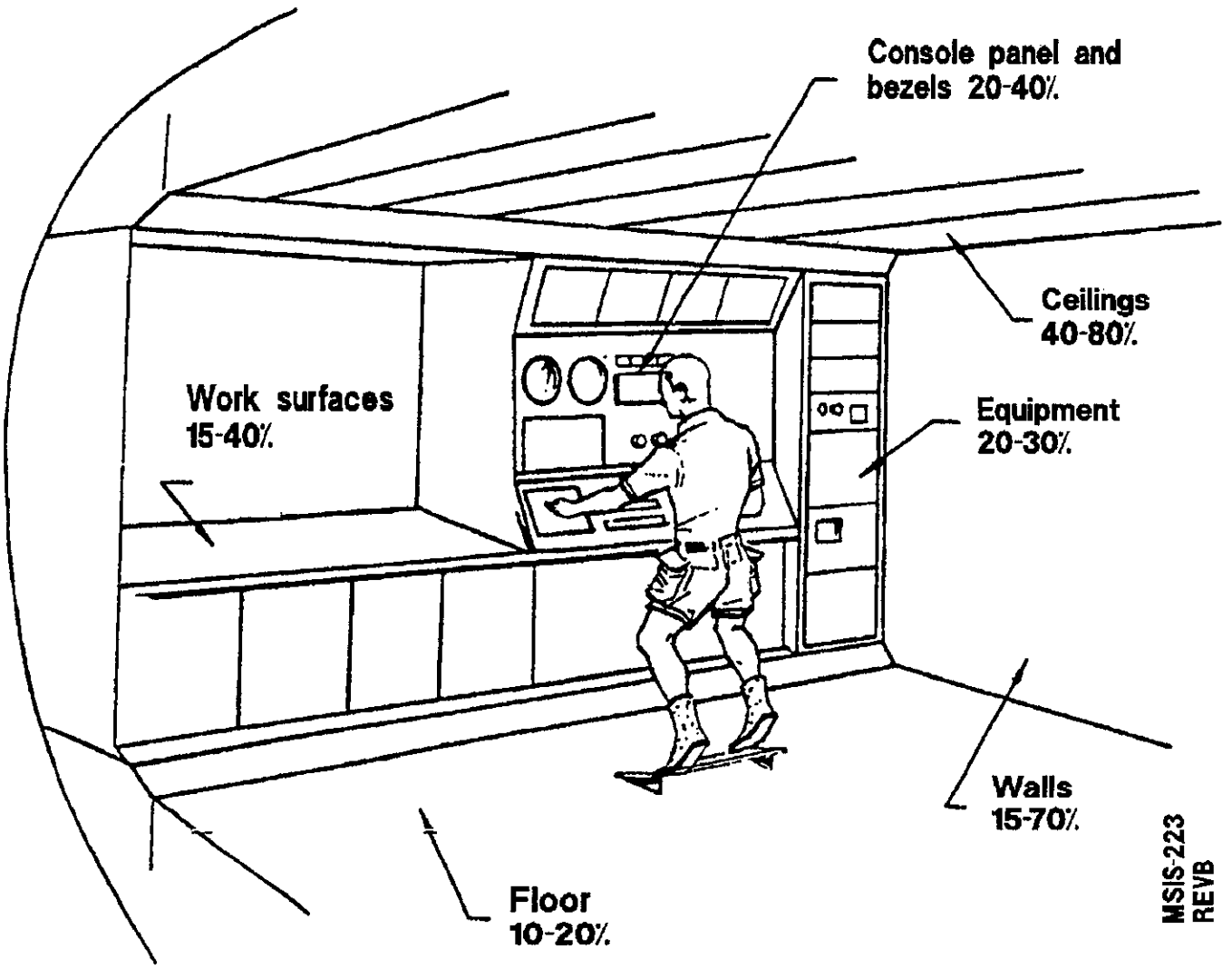

Reference 15, page 3-23

Figure 8.13.2.5-1 Typical Work Surface Reflectance Values

8.13.2.6 Observer Light/Dark Adaptation Design Considerations
{A}

Task/lighting conditions should be planned and executed to preclude or minimize the need for a crewmember to suddenly shift from a very bright to very dark environment, or vice-versa.

8.13.2.7 Psychological Factors Design Considerations
{A}

Although power constraints limit the ability to provide high levels throughout the space module, higher ambient light levels do have a distinctly beneficial effect on morale. Reasonably high level ambient illumination should be considered for such activities as food preparation and eating, recreation, and personal hygiene.

(Refer to Paragraph 8.12.2, Interior Design and Decor Design Considerations, for additional information on the psychological effects of lighting.)

8.13.3 Lighting Design Requirements
{A}

8.13.3.1 Illumination Level Design Requirements
{A}

8.13.3.1.1 General Interior Illumination Levels Design Requirements
{A}

The general illumination of a space module shall be a minimum of 108 lux (10 foot-candles) of white light.

(Refer to Paragraph 9.2.2.2.1, Workstation Illumination Design Requirements, for specific workstation task lighting requirements.)

(Refer to Paragraph 14.4.3.3, EVA Workstation Lighting Design Requirements, for EVA lighting requirements.)

8.13.3.1.2 Illumination For Specific Tasks Design Requirements
{A}

The lighting level shall be measured on the primary work surfaces. Measurement shall be taken at 80% of maximum lumen output.

Specific IVA task lighting requirements are defined in Figure 8.13.3.1.2-1 which also defines illumination levels for workstations. EVA lighting requirements are in Paragraph 14.4.3.3, EVA Workstation Lighting Design Requirements.

8.13.3.1.3 Illumination Levels of Sleeping Areas Design Requirements
{A}

The following requirements apply to the illumination of sleeping areas:

a. The lighting level shall be adjustable from "off" to the maximum for sleeping areas.

b. Minimum lighting of 32 Lux (3 fc), or other means of visual orientation shall be provided to permit emergency egress from sleeping areas.

8.13.3.1.4 Illumination Levels for Dark Adaptation Design Requirements
{A}

If maximum dark adaptation is required, red light or low level white lighting [CIE color coordinates for x and y equals 0.330 +/- 0.030 (1932)] is acceptable. All trans-illuminated displays and controls shall be visible when all other lighting is turned off.

When dark adaptation is required for performance of tasks, the following measures shall be taken:

a. Low Level Lighting - Low level lighting shall be provided for task performance which minimizes loss of dark adaptation.

b. Protection From Stray Light - Areas requiring low level illumination shall be protected from external light sources.

Area or Task	LUX	(Ft.C.)
GENERAL	108	(10)
PASSAGEWAYS	54	(5)
Hatches	108	(10)
Handles	108	(10)
Ladders	108	(10)
STOWAGE AREAS	108	(10)
WARDROOM	215	(20)
Reading	538	(50)
Recreation	323	(30)
GALLEY	215	(20)
Dining	269	(25)
Food Preparation	323	(30)
PERSONAL HYGIENE	108	(10)
Grooming	269	(25)
Waste Management	164	(15)
Shower	269	(25)
CREW QUARTERS	108	(10)
Reading	323	(30)
Sleep	54	(5)
HEALTH MAINTENANCE	215	(20)
First Aid	269	(25)
Surgical	1076	(100)
I.V. Treatment	807	(75)
Exercise	538	(50)
Hyperbaric clinical lab	538	(50)
Imaging televideo	538	(50)
WORKSTATION	323	(30)
Maintenance	269	(25)
Controls	215	(20)
Assembly	323	(30)
Transcribing	538	(50)
Tabulating	538	(50)
Repair	323	(30)
Panels (Positive)	215	(20)
Panels (Negative)	54	(5)
Reading	538	(50)
NIGHT LIGHTING	21	(2)
EMERGENCY LIGHTING	32	(3)

MSIS 291
REV. A

Reference: 351 with updates

NOTE: Levels are measured at the task or 760 mm. (30 in.) above floor.
All levels are minimums.

Figure 8.13.3.1.2-1 Space Vehicle Illumination Levels

1. All external windows shall be provided with protective light shields (shades, curtains, etc.)

2. All doorways shall be lightproof when closed.

8.13.3.2 Light Distribution Design Requirements

{A}

8.13.3.2.1 Glare From Light Sources Design Requirements

{A}

Glare is the sensation produced by any luminance within the visual field that is sufficiently greater than the luminance to which the eye is adjusted to cause eye fatigue, discomfort, annoyance, or interference with visual performance and visibility.

The following measures shall be taken where possible to avoid glare from artificial light sources.

a. Light Sources in Front or to the Side of Operators - Locate light sources so that they do not shine directly at the operator. This includes the range within 60° to any side of the center of the visual field.

b. Source Brightness and Quantity - Use more relatively dim light sources, rather than a few very bright ones.

c. Glare Protection - Use polarized light, shields, hoods, lens, diffusers, and/or visors to reduce the glare.

d. Indirect Lighting - Indirect lighting systems shall be used for providing uniform, glare-free general illumination.

e. Luminance Ratio - The luminance ratio for the luminaries shall not exceed 5:1 maximum to the average over the viewing area (average luminance is six readings on the luminance area).

8.13.3.2.2 Reflected Glare Design Requirements

{A}

a. Luminance of specular reflectance from the task background shall not be greater than 3 times the average luminance of the immediate background.

b. Luminance of specular reflectance from a remote task shall not be greater than 10 times the average luminance from the remote background.

c. Surface Reflection - Work surface reflection shall be diffused and shall not exceed 20 percent specularity.

d. Angle of Incidence - Arrange direct light sources so their angle of incidence to the visual work area is not the same as the operator's viewing angle.

c. Polished Surfaces - Avoid placement of smooth, highly polished surfaces within 60° of normal to the operator's visual field.

d. Light Source Behind Operator - Do not place bright light sources behind operators so that eyeglasses or display faces can reflect glare into the operator's eyes.

8.13.3.2.3 Brightness Ratio Design Requirements

{A}

a. Wall surface average luminance shall be within 50-80% of ceiling surface average luminance.

b. The maximum and minimum luminance ratio for any individual surface shall not exceed 10:1.

c. The brightness ratios between the lightest and darkest areas and/or between task area and surroundings shall be no greater than specified in Figure 8.13.3.2.3-1.

Comparison	Environmental classification[a]		
	A	B	C
Between lighter surfaces and darker surfaces within the task	5 to 1	5 to 1	5 to 1
Between tasks and adjacent darker surroundings	3 to 1	3 to 1	5 to 1
Between tasks and adjacent lighter surroundings	1 to 3	1 to 3	1 to 5
Between tasks and more remote darker surfaces	10 to 1	20 to 1	b
Between tasks and more remote lighter surfaces	1 to 10	1 to 20	b
Between luminaires and adjacent surfaces	20 to 1	b	b
Between the immediate work area and the rest of the environment	40 to 1	b	b

Reference: 15, page 3-21

Notes:

[a] A – Interior areas where reflectances of entire space can be controlled for optimum visual conditions.

B – Areas where reflectances of immediate work area can be controlled, but there is only limited control over remote surroundings.

C – Areas (indoor and outdoor) where it is completely impractical to control reflectances and difficult to alter environmental conditions.

[b] Brightness-ratio control not practical.

MSIS-224

Figure 8.13.3.2.3-1. Required Brightness Ratios

8.13.3.3 Light Color Design Requirements

{A}

Artificial light shall meet the following color requirements:

a. White Light - Work areas of Space Station Freedom shall be illuminated with white light. Color temperature shall be 5000°K or greater for fluorescent lighting and greater than 3800°K for incandescent lighting.

b. Color Temperature Variation - Light sources shall have a correlated color temperature within the visual field of 300°K when operated at maximum power.

c. Color Rendition - Unless otherwise specified the minimum CIE general color rendering index (R_a) of any light source shall be 90 or better, with no special index (R_i) of any one test color sample less than 70.

See Paragraph 9.5.3.2 i for color coding information relative to illuminated displays.

8.13.3.4 Lighting Fixtures and Controls Design Requirements

{A}

The following design requirements apply to lighting fixtures and their controls:

a. Emergency Lights - An independent, self-energizing illumination system shall be provided that will be automatically activated in the event of a major primary power failure or main lighting circuit malfunction resulting in circuit breaker interruption. Emergency illumination levels shall be per Figure 8.13.3.1.2-1.

b. Controls - Lighting controls shall meet the following requirements:

1. Required controls - Each light fixture shall have its own control. In addition centralized lighting control shall be provided for each compartment and translation path.

a) Location - Lighting controls shall be provided at entrances and exits of habitable areas.

b) Sleeping - Sleeping area light controls shall be within the reach of a crewmember when in the sleep restraint.

c) Controls - Controls for artificial illumination at the workstation shall be located within the reach envelope for the operator at the display/control panel or workstation that is affected.

2. Control identification - Lighting controls shall be illuminated in areas that are frequently darkened.

3. Variability - Dimmer controls shall be provided (either discrete or continuous) when required for mission requirements.

c. Flicker - Light sources shall not have a perceptible flicker.

d. Fixture Protection - The following protective measures shall be incorporated into lighting fixtures:

1. Protection from crew - Light sources shall be protected from damage by crew activity.

2. Hot surfaces - Provide protective covers on lighting fixtures whose surface temperature exceeds the maximum allowable temperatures given in Paragraph 6.5.3 b.

3. Bulb or Lens Breakage - Provisions shall be incorporated into all light fixtures to contain all glass fragments in the case of bulb or lens breakage.

4. Replacement of Bulbs - Provisions shall be incorporated into all light fixtures to allow for replacement of bulbs or luminaries as appropriate without tools

and without imposing any hazard to the crew.

(Refer to Section 6.5, Temperature, for additional requirements pertaining to hot surfaces.)

e. Portable Lights - Portable lights shall be provided as necessary for illumination of otherwise inaccessible areas or as supplemental lighting for tasks such as photography.

8.13.3.5 Medical Lighting Requirements

{A}

a. Habitation Module and Hyperbaric Chamber Ambient Light Requirements:

1. The light intensity shall be as specified in Figure 8.13.3.1.2-1.

2. The minimum (contingency) illuminate needed for patient treatment is 500 lux (46 ft. cd.).

3. The light source shall have a color Temperature of 5000°K. If filament lamps are used for light sources, color temperature shall be 4200° Kelvin or greater.

4. Color temperature match and uniformity shall be in accordance with paragraphs 8.13.3.3 b and 8.13.3.3 c .

b. Surgical Lighting:

1. The surgical light will double as a dental light.

2. Requirements of 8.13.3.5 a.3 and 8.13.3.5 a.4 also apply for surgical light.

3. The maximum illuminate to support surgical procedures shall be 4000 lux maximum (872 ft. cd.) to the center of a surface area of 500 square centimeters (77.5 in^2) located 147 cm (5 ft.) from the work area.

4. The illuminate may taper from the center of the pattern to the edge no more than 20% of the maximum illuminate.

5. The luminaries must be directable through a complete hemisphere.

6. The luminaries must be focusable from a pattern diameter of 45 cm (18.5 in) down to 5 cm (2 in).

7. Shadows in the surgical field shall be minimized by luminaries design.

8. Radiant energy in the spectral region of 800 to 1000 nm shall be minimized.

c. Clinical Laboratory Workstation Lighting - The minimum illuminate at the workstation surface shall be as specified in Figure 8.13.3.1.2-1.

d. Imaging Lighting:

1. Requirements 8.13.3.5 a.3 and 8.13.3.5 a.4 also apply to imaging lighting.

2. The minimum illuminate to provide adequate lighting for televideo systems is given in Figure 8.13.3.1.2-1.

8.13.3.6 Workstation Illumination Design Requirements

{A}

a. Illumination - Workstation illumination shall be determined by the tasks to be accomplished. Illumination requirements are given in Figure 8.13.3.1.2-1.

b. Adjustable Illumination - Workstation illumination shall be fully adjustable down at OFF.

c. Supplementary Lighting - Portable lighting shall be available for use when additional lighting is required at a workstation.

d. Light Distribution - Illumination shall uniformly cover the entire work/display area. The minimum ratio for differences in illumination within a work area shall meet the following specifications.

1. Primary viewing areas (30 to 60 degree visual angle about primary lines of sight) - Maintain a 3:1 ratio.

2. Adjacent viewing areas (30 to 60 degree band surrounding primary viewing areas) - Maintain a 5:1 ratio.

3. Workstation area outside "adjacent viewing areas" - Maintain a 10:1 ratio.

e. Shadows - Placement for lighting sources shall be such that shadows are not created on working surfaces or information displays by normal positioning of crewmembers or equipment.

f. Reflections - Lighting sources shall be designed and located to avoid creating reflections or glare from working and display surfaces, as viewed from any working position that might interfere with task performance.

Table of Contents

		Page
9.0	**WORKSTATIONS**	**9-1**
9.1	**INTRODUCTION**	**9-1**
9.2	**WORKSTATION LAYOUT**	**9-1**
9.2.	Introduction	9-1
9.2.2	General Workstation Design Factors	9-1
9.2.2.1	General Workstation Design Considerations	9-1
9.2.2.1.1	Human/Macchine Task Division Design Considerations	9-1
9.2.2.1.2	Generic Workstation Design Considerations	9-1
9.2.2.1.3	Layout Design Considerations	9-1
9.2.2.2	General Workstation Design Requirements	9-1
9.2.2.2.1	Workstation Illumination Design Requirements	9-1
9.2.2.2.2	Congestion and Interterence Design Requirements	9-1
9.2.2.2.3	Orientation Design Requirements	9-2
9.2.2.2.4	Workstation Color Design Requirements	9-2
9.2.2.2.5	Workstation Ventilation	9-2
9.2.2.2.6	Standardization	9-2
9.2.3	Control/Display Placement and Integration	9-2
9.2.3.1	Control/Display Placement and Integration Design Considerations	9-2
9.2.3.2	Control/Display Placement and Integration Design Requirements	9-3
9.2.3.2.1	Control Spacing Design Requirements	9-3
9.2.3.2.2	Display Readability Design Requirements	9-3
9.2.3.2.3	Control/Display Grouping Design Requirements	9-3

9.2.3.2.4 Preferred Control/Display Location Design Requirements 9-5

9.2.3.2.5 Consistent Control/Display Placement Design Requirements 9-6

9.2.3.2.6 Maintenance Controls/Displays Design Requirements 9-6

9.2.3.2.7 Emergency Control/Display Placement Design Requirements . . 9-6

9.2.3.2.8 Control/Display Movement Compatibility Design Requirements . . 9-6

9.2.3.2.9 Control/Display Movement Ratio Design Requirements 9-7

9.2.3.2.10 Control/Display Complexity and Precision Design Requirements . 9-8

9.2.4 Human/Workstation Configuration 9-8

9.2.4.1 Human/Workstation Configuration Design Considerations 9-8

9.2.4.1.1 Restraint Selection Design Considerations 9-8

9.2.4.2 Human/Workstation Configuration Design Requirements 9-9

9.2.4.2.1 Workstation Anthropometric Design Requirements 9-9

9.2.4.2.2 Visual Space Design Requirements 9-9

9.2.4.2.3 Workstation Restrarnts and Mobility Aid Design Requirements . . 9-11

9.2.5 Specialized Workstations 9-12

9.2.5.1 Window Workstation 9-12

9.2.5.1.1 Window Workstation Design Considerations 9-12

9.2.5.1.2 Window Workstation Design Requirements 9-13

9.2.5.2 Maintenance Work Area 9-14

9.2.5.2.1 Maintenance Work Area Design Considerations 9-14

9.2.5.2.2 Maintenance Work Area Design Requirements 9-14

9.2.6 Portable Workstation/Terminals 9-16

9.3 CONTROLS 9-16

9.3.1	Introduction	9-16
9.3.2	Controls Design Considerations	9-16
9.3.2.1	Input Devices Design Considerations	9-16
9.3.2.2	Computer Input Devices Design Considerations	9-20
9.3.3	Control Design Requirements	9-23
9.3.3.1	General Requirements	9-23
9.3.3.2	Accidental Actuation Design Requirements	9-26
9.3.3.3	Control Types Design Requirements	9-27
9.3.3.3.1	Knob Design Requirements	9-27
9.3.3.3.2	Thumbwheel Control Design Requirements	9-30
9.3.3.3.3	Valve Control Design Requirements	9-30
9.3.3.3.4	Crank Design Requirements	9-31
9.3.3.3.5	Handwheel Design Requirements	9-31
9.3.3.3.6	Lever Design Requirements	9-31
9.3.3.3.7	Toggle Switch Design Requirements	9-34
9.3.3.3.8	Pushbutton Design Requirements	9-35
9.3.3.3.9	Foot-Operated Switch Design Requirements	9-36
9.3.3.3.10	Pedal Design Requirements	9-37
9.3.3.3.11	Rocker Switch Design Requirements	9-37
9.3.3.3.12	Push-Pull Control Design Requirements	9-37
9.3.3.3.13	Circuit Breaker Design Requirements	9-39
9.3.3.3.14	Slide Switch Control Design Requirements	9-39
9.3.3.3.15	Legend Switch Design Requirements	9-41

9.3.3.3.16 Printed Circuit (DIP) Switches Design Requirements 9-42

9.3.3.3.17 Key-Operated Switch Design Requirements 9-42

9.3.3.4 Computer Input Devices 9-43

9.3.3.4.1 Keyboard Design Requirements 9-43

9.3.3.4.1.1 Layout 9-43

9.3.3.4.1.2 General 9-45

9.3.3.4.2 Joysticks Design Requirements 9-46

9.3.3.4.3 Light Pen Design Requirements 9-47

9.3.3.4.4 Mouse Design Requirements 9-48

9.3.3.4.5 Track Ball (Rolling Ball) Design Requirements 9-49

9.3.3.4.6 Stylus and Grid Design Requirements 9-49

9.3.3.4.7 Touch-Sensitive Display Design Requirements 9-50

9.3.3.4.8 Bar Code Reader Design Requirements 9-51

9.3.3.5 Speech Transmission Equipment Design Requirements 9-51

9.3.3.6 Operating Controls for Voice Communication Equipment Design Requirements 9-52

9.3.3.7 Speech Recognition Design Requirements 9-52

9.3.4 Examples Control Design Solutions 9-56

9.4 DISPLAYS 9-56

9.4.1 Introduction 9-56

9.4.2 Visual Displays 9-57

9.4.2.1 Introduction 9-57

9.4.2.2 Visual Display Design Considerations 9-57

9.4.2.3 Visual Display Design Requirements 9-59

9.4.2.3.1 Display Readability Design Requirements 9-59

9.4.2.3.1.1 Illumination Design Requirements 9-59

9.4.2.3.1.2 Display Contrast Design Requirements 9-60

9.4.2.3.1.3 Reflections Design Requirements 9-60

9.4.2.3.1.4 Vibration Design Requirements 9-60

9.4.2.3.1.5 Display Size Design Requirements 9-60

9.4.2.3.2 Information Presentation Design Requirements 9-60

9.4.2.3.3 Display Types 9-61

9.4.2.3.3.1 Maintenance Display Design Requirements 9-61

9.4.2.3.3.2 Large Screen Display Design Requirements 9-61

9.4.2.3.3.3 Legend Light Design Requirements 9-63

9.4.2.3.3.4 Scales and Pointers Design Requirements 9-63

9.4.2.3.3.5 Clock and Timer Design Requirements 9-65

9.4.2.3.3.6 Flag Display Design Requirements 9-66

9.4.2.3.3.7 Digital Display Design Requirements 9-67

9.4.2.3.3.8 Light Emitting Diode (LED) Design Requirements 9-67

9.4.2.3.3.9 Visual Display Terminal (VDT) Design Requirements 9-68

9.4.2.3.3.10 Hardcopy Display Design Requirements 9-70

9.4.2.3.4 Display Maintenance Design Requirements 9-71

9.4.3 Audio Displays 9-72

9.4.3.1 Introduction 9-72

9.4.3.2 Audio Displays Design Considerations 9-72

9.4.3.3 Audio Displays Design Requirements 9-74

9.4.3.3.1 General Design Requirements 9-74

9.4.3.3.2 Audio Input/Output Equipment Design Requirements 9-75

9.4.3.3.3 Operator Cormfort and Convenience Design Requirements 9-76

9.4.3.3.4 Voice Communication Controls Design Requirements 9-76

9.4.4 Caution and Warning Displays 9-76

9.4.4.1 Introduction 9-76

9.4.4.2 Caution and Warning System Design Considerations 9-76

9.4.4.3 Caution and Warning System Design Requirements 9-77

9.4.4.3.1 Alarm Classification Design Requirements 9-77

9.4.4.3.1.1 Emergency Definition and Annuciation Requirements (Class 1 Alarms) 9-77

9.4.4.3.1.2 Warning Definition and Annunciatoin Requirements (Class 2 Alarms) 9-78

9.4.4.3.1.3 Caution Display Design Requirements 9-79

9.4.4.3.2 General Caution and Warning System Design Requirements 9-79

9.4.4.3.3 Visual Caution and Warning Display Design Requirements 9-80

9.4.4.3.4 Audio Caution and Warning System Display Design Requirements 9-81

9.4.4.3.4.1 Audio Alarm Characteristics Design Requirements 9-81

9.4.4.3.4.2 Audio Alarm Control Design Requirements 9-83

9.4.4.3.4.3 Verbal Alarm Signal Design Requirements 9-83

9.4.5 Advisory and Tutorial Displays 9-84

9.4.5.1 Advisory and Tutorial Design Requirements 9-84

9.4.5.1.1 Advisory Display and Annunciation Requirements 9-84

9.4.5.1.2 Tutorial Display and Annunciation Requirements 9-84

9.5	**LABELING AND CODING**	**9-84**
9.5.1	Introduction	9-84
9.5.2	Labeling and Coding Design Considerations	9-85
9.5.3	Labeling and Coding Design Requirements	9-86
9.5.3.1	Labeling Design Requirements	9-86
9.5.3.1.1	Labeling Standardization Design Requirements	9-86
9.5.3.1.2	Readability Design Requirements	9-86
9.5.3.1.3	Display Label Placement Design Requirements	9-87
9.5.3.1.4	Scale Marking Design Requirements	9-88
9.5.3.1.5	Alignment Marks/Interface Identification Design Requirements	9-88
9.5.3.1.6	Equipment Identification Design Requirements	9-89
9.5.3.1.7	Location and Orientation Coding Design Requirements	9-89
9.5.3.1.8	Operating Instruction Design Requirements	9-89
9.5.3.1.9	Stowage Container Labeling Design Requirements	9-90
9.5.3.1.10	Failed/Expendable Item Design Requirements	9-91
9.5.3.1.11	Contingency Labels and Marking Devices Design Requirements	9-91
9.5.3.1.12	Grouped Controls and Displays Design Requirements	9-91
9.5.3.1.13	Caution and Warning Labels Design Requirements	9-91
9.5.3.1.14	Alphanumeric Design Requirements	9-92
9.5.3.1.14.1	Font Style Design Requirements	9-92
9.5.3.1.14.2	Punctuation Design Requirements	9-93
9.5.3.1.14.3	Upper/Lower Case Design Requirements	9-94
9.5.3.1.14.4	Titles Design Requirements	9-94

9.5.3.1.14.5 Special Character Design Requirements 9-94

9.5.3.1.14.6 Character Height Design Requirements 9-94

9.5.3.1.14.7 Character Width Design Requirements 9-95

9.5.3.1.14.8 Stroke Width Design Requirements 9-96

9.5.3.1.14.9 Character Measurement Design Requirements 9-96

9.5.3.1.14.10 Spacing Design Requirements 9-96

9.5.3.2 Coding Design Requirements 9-96

9.6 USER-COMPUTER INTERACTION DESIGN CONSIDERATIONS 9-100

9.6.1 Introduction 9-100

9.6.2 Data Display 9-100

9.6.2.1 Design Considerations for Data Display 9-100

9.6.2.2 Design Requirements for Data Display 9-100

9.6.2.3 Text 9-101

9.6.2.3.1 Design Considerations for Text 9-101

9.6.2.3.2 Design Requirements for Text 9-101

9.6.2.4 Tables 9-101

9.6.2.4.1 Design Considerations for Tables 9-101

9.6.2.4.2 Design Requirements for Tables 9-101

9.6.2.4.3 Matrix Tables 9-102

9.6.2.4.3.1 Design Considerations for Matrix Tables 9-102

9.6.2.4.3.2 Design Requirements for Matrix Tables 9-102

9.6.2.4.4 Functional Area Tables 9-103

9.6.2.4.4.1 Design Considerations for Functional Area Tables 9-103

9.6.2.4.4.2 Design Requirements for Functional Area Tables 9-103

9.6.2.5 Graphics 9-103

9.6.2.5.1 Design Considerations for Graphics 9-103

9.6.2.5.2 Design Requirements for Graphics 9-104

9.6.2.6 Coding 9-104

9.6.2.6.1 Design Considerations for Coding 9-104

9.6.2.6.2 Design Requirements for Coding 9-105

9.6.2.7 Windows 9-106

9.6.2.7.1 Design Considerations for Windows 9-106

9.6.2.7.2 Design Requirements for Windows 9-106

9.6.2.8 Format 9-107

9.6.2.8.1 Design Considerations for Format 9-107

9.6.2.8.2 Design Requirements for Format 9-107

9.6.2.9 Information Display Rate 9-108

9.6.2.9.1 Design Considerations for Information Display Rate 9-108

9.6.2.9.2 Design Requirements for Information Display Rate 9-108

9.6.3 Real-Time Interaction 9-109

9.6.3.1 User-Computer Dialogues 9-109

9.6.3.1.1 Design Considerations for User-Computer Dialogues 9-109

9.6.3.1.2 Design Requirements for User-Computer Dialogues 9-109

9.6.3.1.3 Command Language 9-110

9.6.3.1.3.1 Design Considerations for Command Language 9-110

9.6.3.1.3.2 Design Requirements for Command Language 9-110

9.6.3.1.4 Design Requirements for Command Keystrokes 9-111

9.6.3.1.5 Design Requirements for Function Keys 9-111

9.6.3.1.6 Menus 9-112

9.6.3.1.6.1 Design Considerations for Menus 9-112

9.6.3.1.6.2 Design Requirements for Menus 9-112

9.6.3.1.6.3 Permanent Menus 9-113

9.6.3.1.6.3.1 Design Considerations for Permanent Menus 9-113

9.6.3.1.6.3.2 Design Requirements for Permanent Menus 9-113

9.6.3.1.6.4 User Requested Menus 9-114

9.6.3.1.6.4.1 Design Considerations for User-Requested Menus 9-114

9.6.3.1.6.4.2 Design Requirements for User-Requested Menus 9-114

9.6.3.1.7 Direct Manipulation 9-114

9.6.3.1.7.1 Design Considerations for Direct Manipulation 9-114

9.6.3.1.7.2 Design Requirements for Direct Manipulation 9-115

9.6.3.1.7.3 Icons 9-115

9.6.3.1.7.3.1 Design Considerations for Icons 9-115

9.6.3.1.7.3.2 Design Requirements for Icons 9-115

9.6.3.1.7.4 Design Requirements for Actions in the Direct Manipulation Interface 9-116

9.6.3.1.7.5 Interactions with Windows 9-116

9.6.3.1.7.5.1 Design Considerations for Interactions with Windows 9-116

9.6.3.1.7.5.2 Design Requirements for Interactions with Windows 9-117

9.6.3.1.8 DataForms/FormFilling 9-117

9.6.3.1.8.1 Design Considerations for Data Forms/Form Filling 9-117

9.6.3.1.8.2 Design Requirements for Data Forms/Form Filling 9-117
9.6.3.1.8.3 Design Requirements for Default Values for Data Forms 9-118
9.6.3.1.9 Question and Answer 9-119
9.6.3.1.9.1 Design Considerations for Question and Answer 9-119
9.6.3.1.9.2 Design Requirements for Question and Answer 9-119
9.6.3.1.10 User-definable Macros 9-119
9.6.3.1.10.1 Design Considerations for User-definable Macros 9-119
9.6.3.1.10.2 Design Requirements for User-definable Macros 9-119
9.6.3.2 Design Requirements for Movement Within User Interfaces 9-120
9.6.3.2.1 Design Requirements for Position Designation (Cursor) 9-120
9.6.3.2.1.1 Design Requirements for Pointing Cursor 9-121
9.6.3.2.1.2 Design Requirements for Placeholding Cursor 9-121
9.6.3.2.2 Design Requirements for Scrolling 9-121
9.6.3.2.3 Design Requirements for Paging 9-121
9.6.3.2.4 Design Requirements for Searching 9-122
9.6.3.2.5 Hypertext 9-122
9.6.3.2.5.1 Design Considerations for Hypertext 9-122
9.6.3.2.5.2 Design Requirements for Hypertext 9-123
9.6.3.3 Design Requirements for Manipulating Data 9-123
9.6.3.3.1 Editing 9-123
9.6.3.3.1.1 Design Considerations for Editing 9-123
9.6.3.3.1.2 Design Requirements for Editing 9-123
9.6.3.3.1.3 Design Requirements for Graphics Editing 9-124

9.6.3.3.2 Saving 9-124
9.6.3.3.2.1 Design Considerations for Saving 9-124
9.6.3.3.2.2 Design Requirements for Saving 9-125
9.6.3.4 Design Considerations for User Guidance 9-125
9.6.3.4.1 Design Requirements for Consistent Terminology 9-125
9.6.3.4.2 UserFeedback 9-125
9.6.3.4.2.1 Design Considerations for User Feedback 9-125
9.6.3.4.2.2 Design Requirements for User Feeback 9-125
9.6.3.4.3 System Status Messages 9-126
9.6.3.4.3.1 Design Considerations for System Status Messages 9-126
9.6.3.4.3.2 Design Requirements for System Status Messages 9-126
9.6.3.4.4 Design Requirements for Error Handling 9-127
9.6.3.4.5 Prompts 9-128
9.6.3.4.5.1 Design Considerations for Prompts 9-128
9.6.3.4.5.2 Design Requirements for Prompts 9-128
9.6.3.4.6 On-Line Instruction 9-128
9.6.3.4.6.1 Design Considerations for On-Line Instruction 9-128
9.6.3.4.6.2 Design Requirements for On-Line Instruction 9-129
9.6.3.4.7 On-Line Help 9-129
9.6.3.4.7.1 Design Considerations for On-Line Help 9-129
9.6.3.4.7.2 Design Requirements for On-Line Help 9-129
9.6.3.5 Design Requirements for Sequence Control 9-130
9.6.4 User Input 9-130

9.6.4.1 Design Considerations for User Input 9-130

9.6.4.2 Design Requirements for User Input 9-131

9.6.4.3 Design Requirements for Data Entry Design 9-131

9.6.4.4 Design Requirements for Interactive Control 9-132

9.0 WORKSTATIONS
{A}

9.1 INTRODUCTION
{A}

This Section presents considerations and requirements for the design of workstations. The topics covered are workstation layout, controls, displays, labeling and coding, and user/computer interface.

9.2 WORKSTATION LAYOUT
{A}

9.2.1 Introduction
{A}

This section on workstation layout covers the following areas: general workstation design factors, control/display placement and integration, human/workstation configuration, and specialized workstation requirements.

9.2.2 General Workstation Design Factors
{A}

9.2.2.1 General Workstation Design Considerations
{A}

9.2.2.1.1 Human/Machine Task Division Design Considerations
{A}

Some workstation interactions will be complex, involving many subtasks. The designer must determine how the performance of these subtasks will be divided between humans and machines. The goal is to achieve the most effective overall system, making best use of the different capabilities of humans and machines. In making this decision, the following factors should be considered.

a. Functional analysis of the subtasks.

b. Human capabilities and cognitive load limitations.

c. Machine capabilities.

d. Human/machine integration capabilities.

e. Task analysis to ensure smooth integration of human and machine functions.

9.2.2.1.2 Generic Workstation Design Considerations
{A}

Design considerations for generic workstations are presented below.

a. Interchangeable Components - Workstations should be designed to incorporate interchangeable components and common interfaces to the greatest extent practical.

b. Reconfigurable workstations - Workstations should be capable of being reconfigured to accommodate as wide a variety of uses as practical.

9.2.2.1.3 Layout Design Considerations
{A}

Workstation configurations should take into account the operator's needs and capabilities, physical dimensions and the viewing angles and distances.

9.2.2.2 General Workstation Design Requirements
{A}

9.2.2.2.1 Workstation Illumination Design Requirements
{A}

Requirements pertaining to workstation illumination in 8.13.3.6.

9.2.2.2.2 Congestion and Interference Design Requirements
{A}

Design requirements pertaining to workstation congestion and distractions are presented below.

a. Traffic - Workstations shall be located so as to minimize interference with and from traffic areas.

b. Distractions - Workstations shall be designed such that all external distracting stimuli to the operator are minimized.

9.2.2.2.3 Orientation Design Requirements

{A}

Workstations shall be designed around a specific orientation. Unless specific applications dictate otherwise, this orientation shall be consistent with that of the surrounding area.

9.2.2.2.4 Workstation Color Design Requirements

{A}

Workstation color selection requirements are specified below.

(Refer to Paragraph 9.5.3.2 i, Color Coding, for related information.)

a. Color Selection - Neutral colors shall be used in workstations.

b. Reflections - Workstation surface colors shall be lusterless.

c. Controls:

1. Controls shall be black or grey unless special functions dictate otherwise (e.g., emergency evacuation controls are striped black and yellow).

2. Toggle switch handles shall have a satin metallic finish.

3. Control colors shall provide good contrast between controls and background.

d. Panel Color Finish - The panel color shall provide good contrast between the labels and background. Label/background colors shall be consistent within a functional area.

e. Consoles and Pedestals - The color of structural members of control consoles and pedestals and overhead mountings for control units shall be consistent with surrounding areas.

f. Meter Bezels - The meter bezels shall be the same color specified for the particular panel on which the meter will be used.

9.2.2.2.5 Workstation Ventilation

{A}

Workstations with complete or partial hoods shall be designed as follows in accordance with the requirements given in Sections 5.1.3 and 5.8.3.

a. Ventilation shall be provided.

b. Air returned to the habitable area shall not contaminate the atmosphere, consistent with NHB 8060.1.

c. The air stream flow rate and direction shall be adjustable by the workstation operator.

9.2.2.2.6 Standardization

{A}

The workstation design shall standardize common features and functions from element to element to enhance performance and safety and to minimize training requirements.

9.2.3 Control/Display Placement and Integration

{A}

9.2.3.1 Control/Display Placement and Integration Design Considerations

{A}

The placement and integration of controls and displays should optimize user performance and task accomplishment. Control/display placement should be consistent and logical to the user with respect to the tasks to be performed.

9.2.3.2 Control/Display Placement and Integration Design Requirements

{A}

9.2.3.2.1 Control Spacing Design Requirements

{A}

Requirements for control spacing are provided below.

a. Normal Spacing - Minimum and preferred spacing for different types of controls (for the ungloved condition) shall be shown in Figure 9.2.3.2.1-1.

b. Gloved Operation - All space modules shall have those controls necessary for maintenance and recovery following a depressurization (e.g., as a result of a micrometeoroid hit), operable by a pressure-suited crewmember.

(Refer to Paragraph 14.4.3.2, EVA Control and Display Design Requirements, for specific requirements.)

c. Miniature controls - Spacing of miniature controls, intended for ungloved hand operation, shall maintain the same clearance "footprint" about each control (i.e., the edge-to-edge separation between the pair of controls located on either side of a third control) as indicated in Figure 9.2.3.2.1-1.

9.2.3.2.2 Display Readability Design Requirements

{A}

Displays shall be located and designed so that they may be read, to the degree of accuracy required, by personnel in the normal operating or servicing positions without requiring the operator to assume an uncomfortable, awkward, or unsafe position. Requirements for designing readable displays are provided below.

a. Accessibility - Displays shall be visually accessible.

b. Parallax Error - Displays shall be located so that they can be read from the design eye point with no discernible parallax.

c. Orientation - Display faces shall be perpendicular to the operator's line-of-sight whenever feasible. The angle between the line-of-sight and the normal to the display shall always be less than 30 degrees.

d. Simultaneous Use - A visual display that must be monitored concurrently with manipulation of a related control shall be located so that it can be read to within required accuracy while adjusting the control.

e. Display Functionality - Displays shall provide positive and unambiguous indication of system state (e.g., a light indicating "power on", a blinking cursor indicating "ready"). These positive indications shall be used consistently throughout the space module.

9.2.3.2.3 Control/Display Grouping Design Requirements

{A}

Requirements for grouping controls and displays are listed below.

a. Functional Grouping - Displays and/or controls that are functionally related shall be located in proximity to one another - arranged in functional groups (e.g., power, status, test).

b. Sequential Grouping - When a unique sequence of control actions exists, the controls and/or displays shall be arranged in relation to one another according to their sequence of use. Within a functional group, the sequence shall be from left to right or top to bottom whenever feasible.

c. Logical Flow Grouping - When there is not a unique sequence or functional grouping of control actions, controls and displays shall be arranged in a manner consistent with their logical flow.

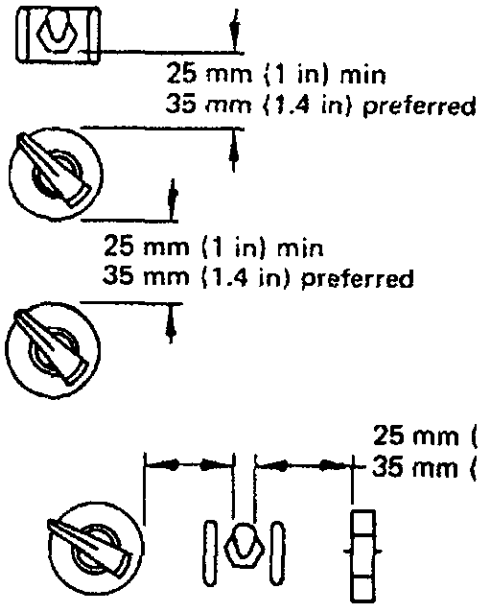

Rotary Controls

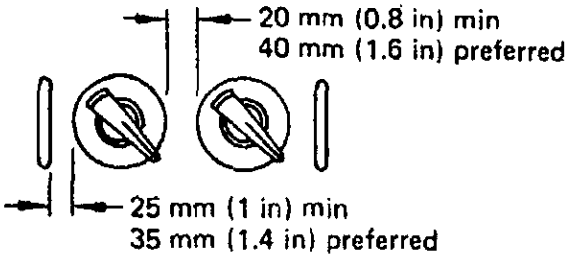

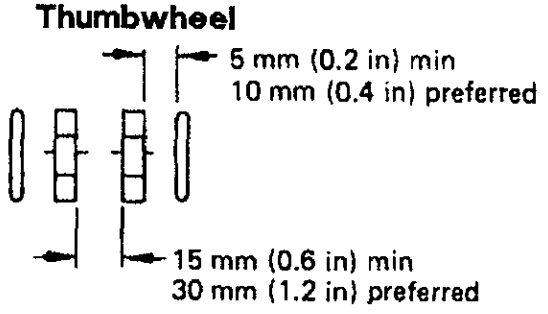

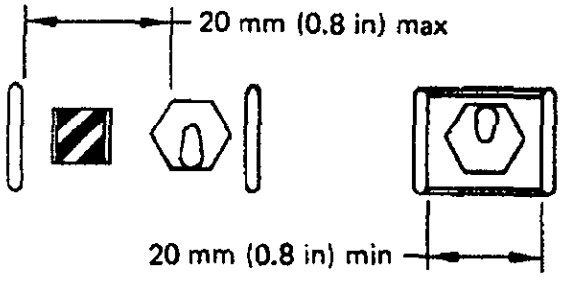

Barrier Guards

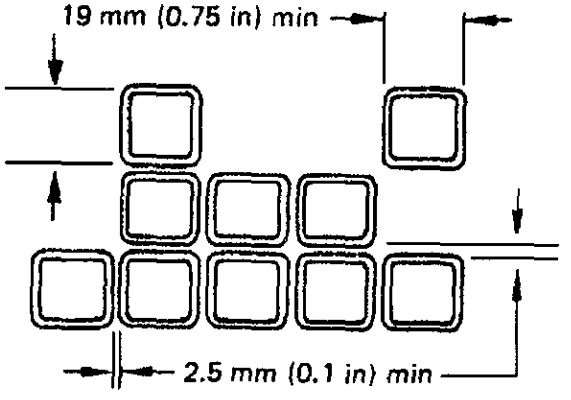

Pushbuttons (Non-Keyboard Applications)

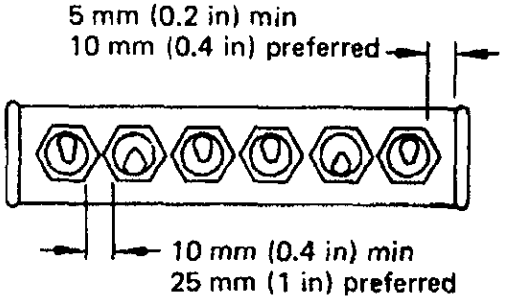

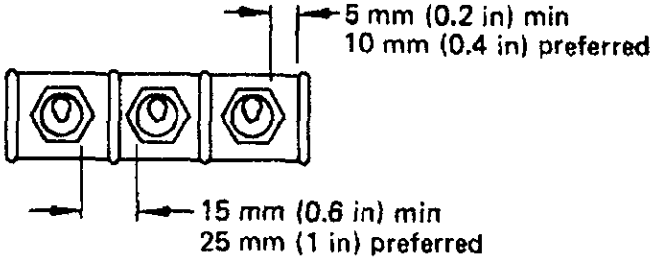

Spacing Required Between Switch Controls

Reference: 1, page 4.9-9

With Updates

MSIS256 Rev. B

Figure 9.2.3.2.1-1 Control Spacing Requirements for Ungloved Operation

If controls are not to be utilized in any specific sequence, then consider arranging them by importance with the most important or frequently used control in the most accessible position.

d. Functional Group Markings - If several functional groupings of displays and controls are placed in close proximity on a control panel, an effective means of discriminating between them shall be provided (e.g., color coding or outlining).

e. Left-to-Right Arrangement - If controls must be arranged in fewer rows than displays, controls affecting the top row of displays shall be positioned at the far left; controls affecting the second row of displays shall be placed immediately to right of the these, etc.

f. Vertical and Horizontal Arrays - If a horizontal row of displays must be associated with a vertical column of controls or vice versa, the farthest left item in the horizontal array shall correspond to the top item in the vertical array, etc. However, this type of arrangement shall be avoided whenever possible.

g. Multiple Displays - When the manipulation of one control requires the reading of several displays, the control shall be placed as near as possible to the related displays, but not so as to obscure displays when manipulating the control.

h. Separate Panels - When functionally related controls and displays must be located on separate panels and both panels are mounted at approximately the same angle relative to the operator, the control positions on one panel shall correspond to the associated display positions on the other panel. The two panels shall not be mounted facing each other. Controls and displays on separate panels are discouraged.

i. Switch/Control Labeling - Each switch/control shall be labeled to indicate its function to the operator.

9.2.3.2.4 Preferred Control/Display Location Design Requirements

{A}

Design requirements for the placement of displays and controls are provided below.

a. Display Location - The most important and frequently used displays shall be located in a privileged position in the optimum visual zone, providing that the integrity of grouping by function and sequence is not compromised. See Figure 9.2.4.2.2-2 for a definition of this zone.

b. Control Location - The most important and frequently used controls shall have the most favorable position with respect to ease of reaching and grasping (particularly rotary controls and those requiring fine settings), providing that the integrity of grouping by function and sequence is not compromised.

c. Multi-G Control Placement - Special attention shall be paid to the placement of controls which must be used while the crewmember is subject to either prolonged or transitory acceleration forces above 2-G.

1. In general, these controls shall be located so that the operator's limb is always in contact with the control (i.e., no reaching is required).

2. The requirements for movement from one control to another shall be minimized (e.g., use combined controls with several functions mounted on a single shaft).

3. Rotary controls shall be selected in preference to linear controls whenever possible.

4. When linear controls are necessary, they shall be mounted so that the direction of operation is perpendicular to the direction of G-forces.

5. Hand controls shall be placed so that when the shoulder, elbow, forearm, and wrist are supported, the following minimum movements can be made:

MOVEMENT ACCELERATION

Arm Up to 4-G

Forearm Up to 5-G

(9-G if arm is counterbalanced)

Hand Up to 8-G

Finger Up to 10-G

d. Control/Display Relationships:

1. The relationships of a control to its associated display and the display to the control shall be immediately apparent and unambiguous to the operator.

2. Controls shall be located adjacent to their associated displays and positioned so that neither the control nor the hand normally used for setting the control will obscure the display.

9.2.3.2.5 Consistent Control/Display Placement Design Requirements

{A}

Requirements for maintaining consistency in control and display design are provided below.

a. Similarity - The arrangement of functionally similar or identical displays and controls shall be consistent from panel to panel throughout and between systems, equipment, units, and vehicles.

b. Mirror Images - Mirror image arrangements shall not be used.

9.2.3.2.6 Maintenance Controls/Displays Design Requirements

{A}

Controls and displays used solely for maintenance and adjustments shall be covered or non-visible during normal equipment operation, but shall be readily accessible when required.

(Refer to Section 12.0, Design for Maintainability, and Paragraph 9.2.3.2.1b, Gloved Operation, for additional information.)

9.2.3.2.7 Emergency Control/Display Placement Design Requirements

{A}

Requirements for emergency displays and controls are provided below.

(Refer to Paragraph 9.4.4.3, Caution and Warning System Design Requirements, for related information.)

a. Emergency Control/Display Placement - Emergency displays and controls shall be located where they can be seen and reached with minimum delay.

b. Computer-Generated Emergency Displays - Emergency information depicted on existing computer-controlled displays shall be sufficiently conspicuous to attract the user's attention consistently.

9.2.3.2.8 Control/Display Movement Compatibility Design Requirements

{A}

Requirements for control/display movement compatibility are provided below.

a. Consistency of Movement - Controls shall be selected so that the direction of movements of the control will be consistent with the related movement of an associated display, equipment component, or vehicle (except as noted in "b" below).

b. Complex Movement Control - When the vehicle, equipment, or components are capable of motion in more than two dimensions, exception to 9.2.3.2.8 a shall be made to:

1. Maintain consistency with other systems.

2. Maintain a natural association between control and system movements. For example, forward motion of a directional control causes some vehicles to dive or otherwise descend rather than to simply move forward.

c. Conflict Avoidance - When several controls are combined in one control activity, caution shall be exercised to avoid a situation in which similar movement of different controls results in different systems responses (e.g., control motion to the right is compatible with clockwise roll, right turn, and direct movement to the right).

d. Remote Controls - Where controls are operated at a position remote from the equipment or controlled vehicle, they shall be arranged to facilitate consistency of movement.

e. Movement Direction - When a rotary control and linear display are in the same plane, the part of the control adjacent to the display shall move in the same direction as the moving part of the display.

f. Labeling - When control/display relationships specified herein cannot be adhered to, controls shall be clearly labeled to indicate the direction of control movement required.

g. Time Lag -

1. The time lag between the response of a system to a control input and the display presentation of the response shall be minimized, consistent with safe and efficient system operation. Where such time delay exceeds acceptable limits, the action of the control shall be appropriately modified (by force feedback or other means) to avoid overcontrol.

2. Immediate feedback for operator entries shall have not more than a .2 sec delay.

3. Simple requests for data shall be carried out more rapidly than .5 to 1.0 sec,

4. Changes of entire data pages may be executed in up to 10 sec, depending on the user's expectations and the criticality of the information.

5. If processing requirements result in longer delays, then the system shall acknowledge a control input immediately and provide periodic updates showing the progress of the processing.

(Refer to Paragraph 9.6.2.d, Response Time, for recommended system response times for interactive computer-generated displays.)

9.2.3.2.9 Control/Display Movement Ratio Design Requirements

{A}

Requirements for designing the relative movement ratios between controls and displays are provided below.

a. Adjustment Time - Control/display ratios for continuous adjustment controls shall minimize the total time required to make the desired control movement (i.e., slewing time plus fine adjusting time) consistent with display size, tolerance requirements, viewing distance, and time delays.

b. Range of Display Movement:

1. When a wide range of display element movement is required, small movement of the control shall yield a large movement of the display element.

2. When a small range of display movement is required, a large movement of the control shall result in a small movement of the display, consistent with accuracy requirements.

c. Coarse/Fine Knob Setting - A rotary knob used for coarse control shall move an associated display element (linear scale) 3-6 times the distance of a fine control knob per revolution of the knob.

d. Bracketing - When bracketing is used to locate a maximum or minimum value (e.g., as in tuning a transmitter), the control knob shall swing through an arc of not less than 10 degrees nor more than 30 degrees either side of the target value in order to make the peak or dip associated with that value clearly noticeable.

e. Counter - When counters are provided, the control/display ratio shall be such that one revolution of the knob produces approximately 50 counts.

9.2.3.2.10 Control/Display Complexity and Precision Design Requirements

{A}

Requirements governing control and display complexity are presented below:

a. Controls/Displays and System Compatibility - The complexity and precision of the control and display system shall be consistent with the precision required by the overall system.

b. Information Processing Ability - Displayed information shall not exceed the user's perception or information processing ability (e.g., displays which are too complex or too briefly presented to be understood.) Display information shall consist of only information that is pertinent to the operator's task at hand. Where it is necessary to have a complex display, means shall be explored to simplify it: by providing an option to choose more or less detail, an option to display data in either an alphanumeric or graphic format , or by organizing the information in spatially isolated, highlighted, or "boxed-around" groups.

c. Motor Ability - The required operation of controls shall not exceed the user's manipulative ability under the dynamic condition and environment in which human performance is expected to occur (e.g., manual dexterity, coordination, force and torque generation, and reaction time shall not be exceeded).

9.2.4 Human/Workstation Configuration

{A}

9.2.4.1 Human/Workstation Configuration Design Considerations

{A}

9.2.4.1.1 Restraint Selection Design Considerations

{A}

Design considerations for the selection of restraints are provided below.

a. Restraint Types - Types of restraints available for workstations include, but are not limited to, foot restraints, tethers, waist restraints, and handholds.

b. Restraint Design Factors - In choosing a restraint system, factors that should be considered include, but are not limited to, the following: comfort, adjustability, ease of engagement and disengagement, stability provided to the user, and compatibility with required task performance.

c. Adjustability - The goal of restraint adjustment at a workstation should be to optimize both the operator's eye position relative to the displays, and his or her reach envelope relative to controls.

(Refer to Paragraph 11.7.2.2, Personnel Restraints Design Considerations, and Paragraph 11.8.2.1, Handhold and Handrail Design Considerations, for specific considerations.)

9.2.4.2 Human/Workstation Configuration Design Requirements
{A}

9.2.4.2.1 Workstation Anthropometric Design Requirements
{A}

Workstations shall be designed to accommodate the physical characteristics of the users.

a. Microgravity - The physical dimensions and layout of workstations shall accommodate the user characteristics for microgravity neutral body posture given in 3.3.4.3.

b. User population - The physical dimensions and layout of the workstation shall conform to the characteristics of the specific population of users given in 3.3.1.3.

(Refer to Paragraph 3.3, Anthropometrics and Biomechanics Related Design Data, for further information on anthropometry.)

c. Movement - Workstations shall be laid out in such a way that operator body motion required for workstation functions shall be minimized. Priority shall be given to the most frequently or time critical functions. Micro-g restraint features shall be incorporated into the design.

d. Musculoskeletal Tension - Workstation design shall minimize the musculoskeletal tension required to maintain position/posture required for workstation operation.

9.2.4.2.2 Visual Space Design Requirements
{A}

Good workstation design shall accommodate the visual abilities of users. Requirements and specifications regarding a crewmember's visual space are provided below:

a. Viewing Distance:

1. Minimum - The effective viewing distance to displays, with the exception of visual display terminal (VDT) displays and collimated displays, shall not be less than 330 mm (13 in) and preferably not less than 510 mm (20 in.).

When using a VDT, a minimum viewing distance of 410 mm (16 in.) shall be provided. The recommended distance depends on the detail and resolution of the display, but would generally be greater than 410 mm (16 in.). When periods of scope observation will be short, or when dim signals must be detected, the viewing distance may be reduced to 250 mm (10 in.).

2. Maximum - The maximum viewing distance to displays located close to their associated controls is limited by reach distance and shall not exceed 710 mm (28 in.). For other displays, there is no maximum limit, other than that imposed by space limitations and visual requirements, provided the display is properly designed.

b. Line of Sight - A crewmember's line of sight depends on body position and varies as a function of gravity level as shown in Figure 9.2.4.2.2-1.

c. Field of View - The field of view for a particular observer position is determined by eye and head movements.

1. The eye movement component for microgravity and 1-G is shown in Figure 9.2.4.2.2-2. (Note that the field of view is measured with respect to eye and head movement ranges shown in Figure 9.2.4.2.2-1.)

2. The head movement component for 1-G is shown in Figure 9.2.4.2.2-2. Microgravity head movement data are not yet available and probably differs from 1-G.

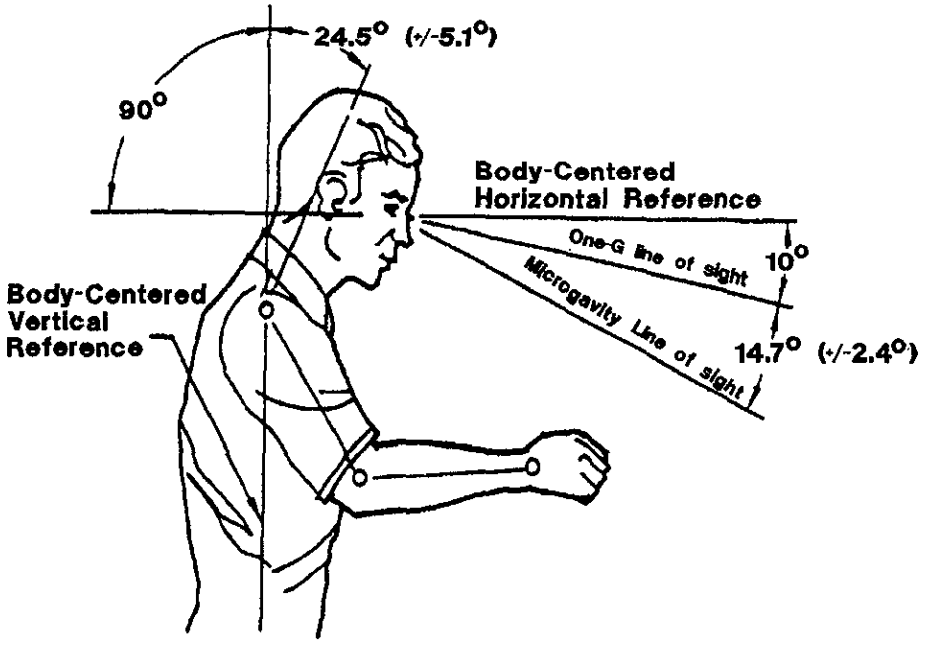

Reference: 1, page 2.2-2

MSIS227
Rev. B

Figure 9.2.4.2.2-1 Line-Of-Sight for One-G and Microgravity

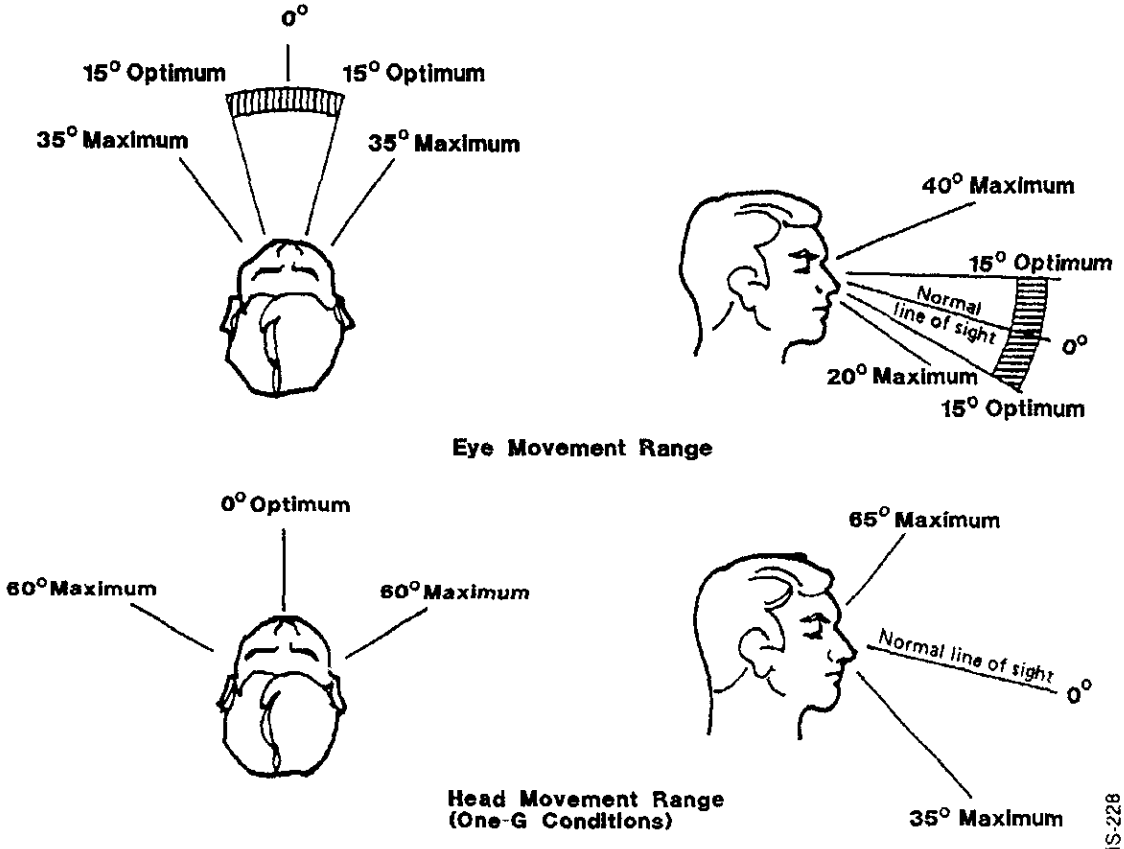

Reference: 2, page 27

MSIS-228
REV A

Figure 9.2.4.2.2-2 Eye and Head Movement Ranges (Line-of-Sight Depends on G-Level)

d. Visual Distractions - Workstations shall be designed so that stimuli distracting to the operator are minimized.

9.2.4.2.3 Workstation Restraints and Mobility Aid Design Requirements

{A}

This section provides requirements for integrating restraints and mobility aids into the workstation environment.

(Refer to Paragraph 11.7.2.3, Personnel Restraints Design Requirements, for specific design requirements relating to different types of restraints.)

a. Neutral Body Posture - The neutral body posture (see Figure 3.3.4.3-1) shall be used in the design of microgravity restraints for long duration use. For short periods of time, significant variation from neutral body posture are acceptable but not desirable.

b. Freedom of Movement - A workstation restraint shall allow the users to reach all required controls and view all required displays without having to assume uncomfortable or awkward postures.

c. Restraint Adjustment

1. Eye Position and Reach - Restraints shall be adjustable so as to achieve the best compromise between eye position (relative to displays) and reach (relative to controls) for crewmembers of differing heights.

2. Adjustment of position shall be rapid and convenient, preferably without crewmembers having to exit restraint.

d. Required Restraint Placement - Foot, waist, or other restraint systems shall be located at all IVA workstations that require a crewmember to perform the following types of tasks.

1. Long-term visual monitoring.

2. Extensive manipulations requiring the use of both hands.

3. Any task that requires the body position to be controlled.

e. Stability - As required, workstation restraints shall provide stability sufficient for:

1. Viewing fine detail.

2. Making fine manual adjustments.

3. Exerting necessary force on controls without causing excessive body displacement.

4. Executing continuous control movement when required.

f. Handholds and Handrails - Workstation handholds and handrails shall meet the following requirements:

(Refer to Paragraph 11.8.2.2, Handhold and Handrail Design Requirements, for additional requirements.)

1. They shall aid in the translation and stability of crewmembers already in foot or other restraints.

2. They shall allow unrestrained crewmembers access to workstation operations to the extent feasible.

3. The physical dimensions and layout of the workstation handholds and handrails shall conform to the characteristics of the specific population of users for whom the system is to be designed.

4. They shall not obstruct visual or physical access to workstations.

5. They shall accommodate multiple personnel as required.

g. Equipment Restraints - Equipment restraints shall be provided to anchor every item of use that is not permanently attached to the workstation.

(Refer to Paragraph 11.7.3, Equipment Restraints.)

9.2.5 Specialized Workstations

{A}

9.2.5.1 Window Workstation

{A}

Since any window in a spacecraft may support mission operations, consideration must be given for its use as a workstation.

9.2.5.1.1 Window Workstation Design Considerations

{A}

The following points should be considered in the design of window workstations.

a. Uses of Window Workstations - Tasks that could involve the use of window workstations are presented below.

1. Coordination of docking and berthing of other modules.

2. Monitoring and support of EVA personnel.

3. Teleoperation of EVA equipment.

4. Support experiments and scientific observations requiring through the window viewing.

5. Support non-workstation functions when not serving as a workstation (e.g., recreational viewing).

(Refer to Paragraph 8.11, Windows Integration, for additional information.)

b. Field of View - A number of factors determine the field of view from a window. These include:

1. Window size.

2. Bezel thickness.

3. Distance of observer from window.

4. Angle from which observer is viewing the window.

(Refer to Figure 8.11.2.2-1, Calculation of Visual Angle From Window, for additional information, and Paragraph 9.2.5.1.2a, Field of View, for design requirements for window workstation fields of view.)

c. Information Input/Output - Information input/output techniques depend, in part, on the task to be performed. In particular, the need for the operator to maintain continuous visual contact with target stimuli can influence the choice of controls.

1. Information output techniques that help maintain visual contact include:

a) Voice output.

b) Nonverbal auditory signals.

c) Heads-up displays.

d) Helmet mounted displays.

e) Well designed standard displays - These should be positioned to minimize the shift of gaze required to fixate them, and designed to allow the operator to take in information quickly.

2. Information input techniques that help maintain visual contact include:

a) Voice recognition.

b) Position, size, and shape coding of controls.

d. Window Design - The design of workstation windows should be based on a careful analysis of the tasks that will be performed using them and should include the following considerations:

1. Consideration of the perceptual requirements of the tasks that the crewmembers will be required to perform.

2. Consideration of the capabilities and limitations of the equipment that requires through the window sensing.

9.2.5.1.2 Window Workstation Design Requirements

{A}

Design requirements for window workstations are provided below.

(Refer to Paragraph 11.11, Windows, for requirements on the optical properties of windows as they apply to both humans and optical instruments, protection of humans from harmful window-related radiation, and the protection and maintenance of windows.)

a. Field of View:

1. Design Eye Volume - The required field of view for a window workstation shall be attainable with the observer's eye position located anywhere within a specified design eye volume. The design eye volume shall satisfy the following requirements.

a) The design eye volume shall conform to the characteristics of the specific population of users for whom the system is to be designed when using the restraint system.

b) The design eye volume shall accommodate all movements necessary to operate controls and view displays.

c) The design eye volume shall accommodate normal crewmember movement and changes of posture required for comfort (e.g., a crewmember shall not be required to maintain eye position fixed within a small volume of space for an extended period of time).

b. Window Shape - Rectangular rather than round viewing areas shall be used on windows whenever feasible. The purpose is to provide orientation cues for crewmember body position and/or extravehicular objects relative to the space module.

c. Multi-Observer Windows - When feasible, windows shall accommodate more than one observer. Window shape and work area layout shall be designed to this end.

d. Shielding:

1. Luminance control - The capability to reduce window transmissivity through the addition of neutral filtering shall be provided. This shall allow crewmembers to work comfortably with extravehicular luminance conditions.

2. Complete closure - The capability to completely block light transmittal through a window shall be provided.

3. Sun Shades - When necessary, sun shades shall be provided. These shades shall be adjustable unless otherwise specified.

e. Color Discrimination - Windows used for making color discriminations shall possess neutral spectral transmission so that perceived target object hues are not altered.

f. Cleaning - Inside window surface shall be easily cleaned without damaging window.

(Refer to Paragraph 11.11.3.5, Window Maintenance Design Requirements, for additional information on window maintenance.)

g. Reflections - Workstation and work area design and lighting shall minimize reflections from the window to the lowest feasible level.

(Refer to Paragraph 11.11.3.1.7, Visual Protection Design Requirements, for information on antireflection techniques.)

h. Dark Adaptation - When dark adaptation is required at a window workstation, the workstation area shall allow dimming of lights to the required level without unduly interfering with other space module activities.

(Refer to Paragraph 9.2.2.2.1h, Dark Adaptation, for additional information.)

i. Display Shielding - Displays shall be shielded from sunlight entering the window or be designed to be legible in sunlight.

j. Control Placement - Control placement and design shall allow crewmembers to assume a position relative to the window that optimizes viewing conditions through the window.

k. Restraints - The design and placement of window workstation restraints shall allow up to four continuous hours of comfortable use.

9.2.5.2 Maintenance Work Area
{A}

9.2.5.2.1 Maintenance Work Area Design Considerations
{A}

Considerations pertaining to information presentation/retrieval at workstations is presented below.

a. Computer Access - The maintenance workstation should provide computer access to all maintenance-related programs.

b. Communication - The maintenance workstation should permit real-time voice and data communications with other crewmembers and/or the ground-based maintenance system as needed to provide assistance in maintenance and repair.

c. Hardcopy - A method for managing and restraining hardcopy material (books, checklists) should be designed into all workstations. Hardcopy positioning should consider lighting requirement, facing angles, print size, eye distance, and neutral body posture.

d. Data Presentation - The maintenance workstation should be capable of displaying maintenance-related data such as schedules, procedures, diagnostic details, and forecast maintenance plans.

e. Bar Code Reader - A Bar Code Reader should be provided which will allow automatic reading of the labeling system to enable crossmatching of information within the space module computer system.

f. No-Hands Input/Output - Insofar as possible, a no-hands-required input/output device should be made available at the maintenance workstation.

9.2.5.2.2 Maintenance Work Area Design Requirements
{OP}

a. Layout/Construction Requirements - The Maintenance Work Station (MWS) shall serve as the primary location for servicing and repair of maximum sized replacement unit/system components. The MWS provides a controlled environment with user interfaces to the electrical, data, power and video systems.

1. Location - The maintenance work area shall be located in an easily accessible area.

2. Equipment size capability - The maintenance work area shall be sized to accommodate the maximum-sized replacement unit/system that may require repair or maintenance.

3. Transparent Surfaces - All transparent surfaces (e.g., displays, windows, etc.) shall be scratch/mar resistant, antifog and anti-icing where possible, and shatter resistant.

4. Capabilities - The maintenance work area shall provide the capability to operate the electrical, mechanical, vacuum and fluid support during corrective and preventive maintenance.

5. The maintenance work area shall have general purpose diagnostic equipment and shall accommodate special purpose diagnostic equipment.

6. The maintenance work area shall be equipped with a set of hand tools and with general purpose test and ancillary equipment and shall have ample stowage space for such tools, equipment, and materials (e.g., wire, screws, tape, nuts and raw stock).

7. The maintenance work area shall be developed with consideration being given toward providing capabilities for performing minor contingency fabrication tasks, including but not limited to turning, bending, forming, drilling, and bonding.

b. Contamination:

(Refer to Paragraph 13.2.3, Housekeeping Design Requirements, for additional information on contamination control.)

1. Cleaning:

a) Exposed surfaces shall be designed to provide for easy cleaning. Crevices and narrow openings which can collect liquid or particulate matter and which cannot be readily cleaned without special tools shall be avoided.

b) Any type of grid or uneven surface shall be configured to permit cleaning of all areas.

c) The maintenance work area shall have a vacuum or evacuation system for purging and cleaning replacement units/systems. The vacuum effluence shall be contained to preclude external environment contamination.

d) The maintenance work area shall provide a means to control odors and/or to remove particulates from a system. All filters shall be easily accessible for cleaning and/or replacement. Means shall be provided to prevent leakage of any entrapped material from a filter unit during removal.

e) Maintenance work area shall have the capability for the collection and disposal of debris, odors, particulate matter, and liquid from the work area atmosphere as well as from exposed interior surfaces of the workstation.

f) Contamination Control:

1) A means shall be provided for passive contamination control in the transport of devices to and from the maintenance workstation.

2) The maintenance work area shall be provided with means to measure and monitor the contamination level within the work area, including the capability to measure surface contamination level.

3) A means shall be provided for contamination control which assure prevention of mutual contamination between the ambient environment and the work area.

g) A means shall be provided for a passive contamination control method for IVA maintenance operations actions which will be performed remote from the maintenance work area.

2. Hazardous operations - The capability to seal hazardous operations from other areas shall be provided at the Maintenance Workstation for the duration of the operation.

3. Particulate Matter Retention - The maintenance workstation shall be capable of particulate matter/ odor retention and effluent scrubbing/capture.

c. Replacement Unit Interface - The maintenance work area shall be able to interface with the failure detection, fault isolation and built-in test capability of replacement units as required.

d. Maintenance Aids Package - The maintenance work area shall be provided with a common maintenance aids package which will include but not be limited to: audio, video, and data communication links; a data management system interface and utilities.

e. Power - The maintenance work area shall have the capability to provide conditioned and converted power to support replacement unit design specified requirements for servicing and repair activities.

f. Illumination - Work area illumination shall be as specified in Figure 8.13.3.1.2-1.

9.2.6 Portable Workstation/Terminals

{A}

Requirements for portable workstations are given below:

a. Shall provide for restraint per requirements given in Paragraph 11.7.3.3.

b. Shall provide for wireless operation.

c. If cable connections are required, dedicated connectors shall be used to interface the module with the facility by using a maximum cable length of 3 meters.

d. Shall provide handles or grasp areas per requirements given in Paragraph 11.6.3.

9.3 CONTROLS

{A}

9.3.1 Introduction

{A}

This section provides considerations and requirements for the design and use of controls. The data are for ungloved operation unless otherwise stated. Where operating forces are given, they are for microgravity conditions. This should not pose a problem if crewmembers are adequately restrained.

(Refer to Paragraph 14.4, EVA Workstations and Restraints, for gloved operations. Refer to Paragraph 4.9, Strength, for additional information on the application of force.)

9.3.2 Controls Design Considerations

{A}

9.3.2.1 Input Devices Design Considerations

{A}

The advantages and disadvantages of different controls are presented in Figure 9.3.2.1-1. Recommended control uses are also included in this figure. Similar data for computer input devices are presented in Paragraph 9.3.2.2.

Advantages	Disadvantages
a. Knob, discrete position rotary	
Used when 4 or more detented positions are required. Resistant to accidental actuation	Not recommended for 2 position functions. Relatively slow
b. Knob, continuous position rotary	
Good for precise settings Single- or multi-turn capability	Potential parallax error Relatively slow Susceptible to misinterpretation if multiple turn Sensitive to accidental activation Difficult (time consuming) to re-establish setting if switch is moved inadvertently
c. Knobs, ganged	
Efficient use of space	Three-knob asssembly not recommended Relatively slow Not recommended for gloved use Susceptible to erroneous settings Not recommended when frequent changes are required. One knob may move other knob if inter-knob friction exists (may require two handed operation).
d. Thumbwheels	
Compact	Not recommended for fine control Slow, not recommended for high traffic functions Can cause intermediate and inadvertent inputs Susceptible to inadvertent activation Position or selection may be difficult to assess in dim light
e. Cranks	
Used when multiple rotations are required Fast Can handle high forces Can be used for coarse and fine adjustments	Requires space Susceptible to accidental movement Tempting hand hold or grasp under microgravity conditions

Reference: 2, Pages 71-110

MSIS-231
1 of 3

Figure 9.3.2.1-1. Advantages and Disadvantages of Different Control Types

Advantages	Disadvantages
f. Handwheels	
Good for high forces Suitable for 2 handed use	Requires substantial space Not good for fine adjustments May require two-handed operation High force operation will require good restraint system Temptation to use as hand hold or grasp under microgravity conditions
g. Levers	
Good for high forces Status is obvious	Large space requirements Susceptible to accidental displacement Temptation to use as hand hold or grasp under microgravity conditions
h. Toggle switches	
Used for 2 or 3 discrete positions Efficient use of space Setting is obvious to user	Four or more positions should be avoided Susceptible to inadvertent activation Often requires guards or shield, especially in microgravity
i. Push button	
Efficient use of space Fast activation	State of activation is not always obvious Susceptible to accidental activation Lighted push buttons cause continuous power drain May require secondary status indication Bulb failure can lead to erroneous interpretation of status
j. Foot operated switches	
Can be used when hands are occupied	Cannot use with foot restraints Susceptible to accidental activation Not recommended for critical operations, frequent use or fine adjustments Can induce forces to move operator out of position if used in microgravity without restraints

Reference: 2, Pages 71-110

MSIS-231
2 of 3

Figure 9.3.2.1-1. Advantages and Disadvantages of Different Control Types (Continued)

Advantages	Disadvantages
k. Pedals	
Use when both hands occupied High force capability May be used where pedal has created a stereotyped expectancy	Cannot use with foot restraints Can induce forces to move operator out of position if not restrained
l. Rocker switches	
Efficient use of space Will not snag clothing Status is obvious	Susceptible to accidental activation Can be difficult to read three-position rocker switches
m. Push-pull controls	
Used for 2 position control Efficient use of panel space May be used in a mutli-mode fashion (e.g., on-off and volume control) to save space	Difficult to determine positions when used for multiple position control Susceptible to inadvertent activation
n. Slide switches	
Can be discrete or continuous Good for large number of discrete positions Provide easy recognition of relative switch setting	Continuous slide switches susceptible to mispositioning Can be difficult to position continuous slide switch precisely
o. Legend switches	
Good in low illumination (if self illuminated) Fast activation Effective way to label switches Efficient use of panel space	Not recommended for more than two positions State of activation is not always obvious
p. Printed circuit (DIP) switches	
Very space efficient	Slow Usually require stylus to set Small size makes switch difficult to read May require stabilized hand to set and to avoid excess force
q. Key operated switches	
Prevent unauthorized operation Permits flush panel for seldom operated switches	Slow to operate Must keep track of seperate key Key slot susceptible to contamination if not shielded — especially in microgravity

Reference: 2, Pages 71-110

MSIS-231
3 of 3

Figure 9.3.2.1-1. Advantages and Disadvantages of Different Control Types (Continued)

(Refer to Paragraph 9.3.4, Examples - Control Design Solutions, for an assessment of controls used aboard Skylab.)

9.3.2.2 Computer Input Devices Design Considerations

{A}

Design considerations for a number of different devices used to interact with computers are provided below.

a. Joystick - Joysticks are used primarily to control cursor position on a VDT. Advantages and disadvantages of using joysticks are provided in Figure 9.3.2.2-1a.

1. Isotonic (displacement) joystick - Isotonic means that cursor movement depends on direction and displacement but not the speed or force with which the joystick is moved. Isotonic joysticks are well suited for tasks in which positioning accuracy is more critical than positioning speed.

2. Isometric joystick - The isometric joystick lever deflects only minimally in response to applied force, but may deflect perceptibly against a stop at full applied force. Cursor movement is controlled by the direction and force applied to the lever. Isometric joysticks are particularly appropriate for applications that:

a) require the cursor to return to center after each entry or readout.

b) involve feedback to the operators that is primarily visual (from some system response) rather than kinesthetic from the joystick itself.

c) involve minimal delay and tight coupling between control and input system reaction.

b. Four Arrow Key Control - The use of four keyboard keys (left, right, up, and down arrows) to control cursor position should allow movement in discrete steps, and continuous movement with continued depression of a particular key.

Advantages and disadvantages of four arrow key control are shown in Figure 9.3.2.2-1b.

c. Light Pen - The light pen is a light-sensing device used primarily to indicate position on a CRT screen. It may also be adapted for reading bar coding.

Advantages and disadvantages of using this device are provided in Figure 9.3.2.2-1c.

d. Mouse - The mouse is a small handheld device that can be moved across any flat surface to control the position of a follower on an associated display. The mouse can contain a small number of function keys.

Advantages and disadvantages of using a mouse are provided in Figure 9.3.2.2-1d.

e. Track Ball - A track ball device consists of a sphere suspended on low-friction bearings. It is turned in place (usually by hand) to control the position of a follower on an associated display.

Advantages and disadvantages of using track balls are provided in Figure 9.3.2.2-1e.

f. Stylus and Grid - This device consists of a grid with a spatial layout that corresponds to that of the display. The grid senses the position of the stylus (usually handheld) to control the position of a follower on the display.

Advantages	Disadvantages
a. Joystick	
Can be used comfortably with minimum arm fatigue	Slower than a light pen for simple input
Does not cover parts of screen in use	Must be attached, but not to the display
Expansion or contraction of cursor movement is possible	Unless there is a large joystick, an inadequate control/ display ratio will result for positional control
	The displacement of the stick controls both the direction and the speed of cursor movement
	Difficult to use for free-hand graphic input
	Not good for option selection
b. Four arrow cursor control	
Allows accurate positioning of the cursor	Should not be used for free-hand graphics
May provide positive transfer and advantages associated with touch typing	
Allows for nondestructive movement of the cursor	
Requires little or no training	
c. Light pen	
Fast for simple input	May not feel natural to user, like a real pen or pencil
Good for tracking moving objects	May lack precision because of the aperture, distance from the CRT screen surface, and parallax
Minimal perceptual motor skill needed	
Good for gross drawing	Contact with the computer may be lost unintentioanlly
Efficient for successful multiple selection	Frequently required simultaneous button depression may cause slippage and inaccuracy
User does not have to scan to find a cursor somehwere on the screen	Must be attached to terminal, which may be inconvenient
May be adaptable to bar coding	Glare problem if pen tilted to reduce arm fatigue
	Fatiguing if pen is held perpendicular to work surface
	If pointed to dark area, may require user to flash the screen to find pen
	One-to-one input only (zero order control)
	May be cumbersome to use with alternate, incompatible entry methods, like the keyboard

Reference: 279, pages 8-6 to 8-9

MSIS-232
1 of 3

Figure 9.3.2.2-1. Advantages and Disadvantages of Computer Input Devices

Advantages	Disadvantages
c. Light pen (continued)	
	Tends to be used for purposes other than originally intended, e.g., for key depression Tends to be fragile Hand may obstruct a portion of screen when in use Care must be taken to provide adequate "activate" area around choice point Cannot be used on gas panel
d. Mouse	
Relatively fast Has low error rates for large targets Allows user to concentrate attention on VDT screen	Requires additional flat work surface Difficult to use for free-hand graphic input High error rates with small targets Lost time when mouse held backwards or sideways Some training needed Wheels slipping sometimes a problem Must be adapted for microgravity use
e. Track ball	
Ball excellent for three-dimensional rotation of objects Efficient use of space Allows user to concentrate attention on VDT screen Unaffected by microgravity if properly designed	Inconvenient or impossible to have integrated "activate" switch on the ball May need two devices to accomodate handedness
f. Stylus and grid	
Excellent for graphic entry Can be designed so that the user works on a horizontal surface Multipurpose input device Minimal difficulty going from graphic input if character is built into the system, and the tablet is used for this input. Spatial correspondence between displays and control movement	Extra space required on work surface Displacement of visual feedback from motor activity may cause coordination problems Entering handprinted characters to be recognized by the the system is very slow (fewer than 40 characters/min) compared with typewriter entry (averaging 200 recognition characters/min.)

Reference: 279, pages 8-6 to 8-9

MSIS-232
2 of 3

Figure 9.3.2.2-1. Advantages and Disadvantages of Computer Input Devices

Advantages and disadvantages are provided in Figure 9.3.2.2-1f.

g. Touch-Sensitive Device - A device with a spatial layout that corresponds to that of the screen. It is activated by being touched and records the location of the touch. It generally consists of a transparent surface attached directly to the face of a VDT and can be used for cursor control or to activate menu items, icons, etc.

Advantages and disadvantages are provided in Figure 9.3.2.2-1g.

h. Voice Activation - A voice-activated system recognizes words or sequences of words spoken by an operator and responds as if a command was entered manually. The words or word sequences must be specified in advance. One characteristic of voice recognizers is the speaker dependence versus independence. Speaker dependent systems require the users to "train" the system to their voice before using the system while the speaker independent systems do not require such training.

Another characteristic of voice recognizers is the speech input rate. Some recognizers can only accept single, isolated utterances. Others can accept phrases or even continuous, conversational-type speech. This is a new technology undergoing rapid changes.

Advantages and disadvantages are provided in Figure 9.3.2.2-1h.

9.3.3 Control Design Requirements

{A}

9.3.3.1 General Requirements

{A}

General requirements for the design of controls are provided below.

a. Standardization - Controls shall be standardized to the maximum extent practical. Specific aspects to be standardized include, but are not limited to, the following areas:

1. Control operation.

2. Control mounting and guarding.

3. Control orientation.

4. Control size and color.

5. Nonstandardization of control design shall be employed only if meaningful.

b. Multi-g Controls - Controls to be used under prolonged or transitory acceleration forces above 2 g's shall be designed to accommodate the crewmember's altered physical abilities.

(Refer to Paragraph 9.2.3.2.4c, Multi-g Control Placement, for additional information.)

c. Microgravity Controls - Crew restraints shall be provided for use at all microgravity workstations.

d. Detent Controls - Detent controls shall be selected over continuous controls whenever the operational mode requires control operation in discrete steps.

e. Stops - Stops shall be provided at the beginning and end of the range of control positions if the control is not required to be operated beyond the indicated end positions or specified limits.

f. Load Limit - Control shall withstand the crew-imposed limit loads given in Figure 9.3.3.1-1 as a minimum.

g. Blind Operation - Where "blind" operation (i.e., actuation without visual observation) is necessary, the controls shall be shape coded or separated from adjacent controls by at least 13 cm (5 in.).

Advantages	Disadvantages
g. Touch sensitive devices	
No seperate input device needed Fast	Low resolution Finger can block view Fingerprints on screen Tires are in one-G Susceptible to inadvertent actuation in microgravity
h. Voice Activation	
Does not require hands Does not require user to shift gaze Useful for no light or low light condition conditions Allows simultaneous activation of more than one control mode Could be used in lieu of a translator, allowing natural, conversational version of different languages to control complicated systems A speaker dependent system prevents an unauthorized person from issuing commands verbally	Entry can be slow Must use specified vocabulary May require headset Speaker dependent systems must be individualized to specific user If individual's voice changes (e.g. becomes stressed) a speaker dependent system may not respond Speaker dependent systems require template loading time Background noise may interfere with recognition Speaker independent system may allow unauthorized people to issue commands.

Reference: 279, pgs. 8-6 to 8-9
With updates

MSIS23
Rev. B

Figure 9.3.2.2-1 Advantages and Disadvantages of Computer Input Devices (Cont.)

Item	Type of load	Design limit load	Direction of load
Levers, handles, operating wheels	Push or pull concentrated on most extreme tip or edge	220 N (50 lbf)	Any direction
Small knobs	Torsion	15 Nm (11 ft-lb)	Either direction

MSIS-233

Reference: 1, page 4.9-2

Figure 9.3.3.1-1. Maximum Crew-Induced Design Limit Loads (Controls)

(Refer to Section 9.2.3.1, Control/Display Placement and Integration - Design Requirements, for additional information.)

h. High-Force Controls - In general, controls requiring operator forces exceeding the strength limits of the lowest segment of the expected user population shall not be used. High force controls shall only be used when the operator's nominal working position and/or restraint system provides proper support.

i. Miniature Controls:

1. Miniature controls shall be used only when severe space-to-required-functionality limitation exists and use by a suited crewmember is not required.

2. Miniature controls shall be avoided when frequent access to controls is required.

3. The movements of miniature controls shall be similar to those of standard controls.

(Refer to Paragraph 9.2.3.2.8, Control/Display Movement Compatibility - Design Requirements, and Paragraph 9.2.3.2.9, Control/Display Movement Ratio - Design Requirements, for information on standard controls.)

4. The actuation of miniature controls shall be made as easy as possible without subjecting them to accidental actuation.

i. Emergency or Critical Controls - Emergency or Critical Controls shall be coded or labeled.

9.3.3.2 Accidental Actuation Design Requirements

{A}

Requirements for reducing accidental actuation of controls is presented below.

a. Design and Location - Controls shall be designed and located so as to minimize susceptibility to being moved accidentally. Particular attention shall be given to critical controls whose inadvertent operation might cause damage to equipment, injury to personnel, or degradation of system functions.

b. Protective Methods - Adequate protection shall be provided for controls that are susceptible to accidental actuation. Protective methods include, but are not limited to, those listed below.

1. Locate and orient the controls so that the operator is not likely to strike or move them accidentally in the normal sequence of control movements.

2. Recess, shield, or otherwise surround the controls by physical barriers. The control shall be entirely contained within the envelope described by the recess or barrier.

3. Cover or guard the controls. Safety or lock wire shall not be used.

4. If a cover guard is used, its location when open shall not interfere with the operation of the protected device or adjacent controls.

5. Provide the controls with interlocks so that extra movement (e.g., lifting switch out of a locked detent position) or the prior operation of a related or locking control is required.

6. Provide the controls with resistance (i.e., viscous or coulomb friction, spring-loading, or inertia) so that definite or sustained effort is required for actuation.

7. Provide the controls with a lock to prevent the control from passing through a position without delay when strict sequential actuation is necessary (i.e., the control moved only to the next position, then delayed).

c. Noninterference - Protection devices shall not interfere with the normal operation of controls or the reading of associated displays.

d. High-Traffic Areas - Critical controls shall not be located in high-traffic paths or translation paths. If controls must be placed in these locations, means shall be used to prevent inadvertent actuation (i.e., pull to unlatch toggle switches).

(Refer to Paragraphs 9.3.3.2b, Protective Methods, and 8.7.3, Traffic Flow Design Requirements, for additional information.)

e. Dead-Man Controls - Where appropriate, controls, which result in system shutdown to a noncritical operating state when force is removed, shall be utilized where operator incapacity can produce a critical system condition.

f. Barrier Guards:

1. Barrier guard spacing requirements for use with toggle switches, rotary switches, and thumbwheels is shown in Figure 9.2.3.2.1-1 and 9.3.3.2-1.

(For gloved operation, refer to Paragraph 14.4.3.2, EVA Control and Display Design Requirements.)

2. Accidental actuation of controls can result when crewmembers use barrier guards as handholds. Barrier guards shall be designed and located so as to minimize this problem.

g. Recessed Switch Protection - Under conditions where barrier guards are not applicable, rotary switches that control critical experiment or vehicle functions shall be recessed as shown in Figure 9.3.3.2-1.

h. Detachment - Covers and guards shall be designed to prevent accidental detachment during operational periods.

i. Position Indication - When protective covers are used, control position shall be evident without requiring cover removal.

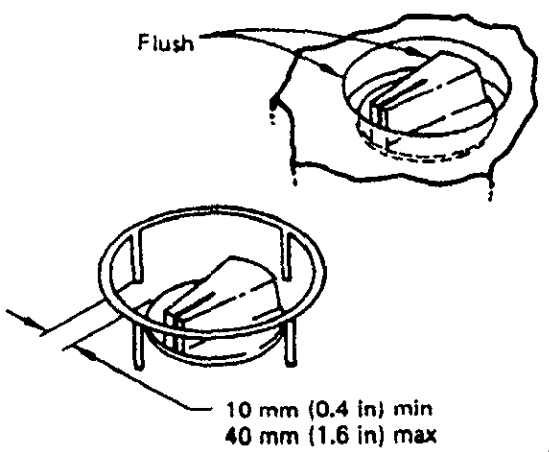

Reference: 1, page 4.9-10

MSIS-234

Figure 9.3.3.2-1. Rotary Switch Guard

j. Hidden Controls - When hidden controls (i.e., controls that cannot be directly viewed) are required they shall be guarded to prevent inadvertent actuation.

k. Hand Controllers - Hand controllers shall have a separate on/off control to prevent inadvertent actuation when the controller is not in use.

l. Circuit Breaker Protection - When circuit breakers are ganged in a common array, a cover shall be used as an additional security measure to prevent inadvertent actuation or damage.

9.3.3.3 Control Types Design Requirements

{A}

9.3.3.3.1 Knob Design Requirements

{A}

Requirements for the design of knobs are provided below.

a. Discrete Rotary Selection Switches:

1. General:

a) Rotary selector switches shall be used when four or more detented positions are required for discrete functions.

b) Rotary selector switches shall not be used for a two-position function unless ready visual identification of control position is of primary importance, and speed of control operation is not critical, or unless the use of other types of switches is not feasible.

2. Displacement - Up to 12 switch positions may be provided. Standard distance between positions shall be 30 degrees.

3. Knob dimensions - Pointer knobs of the type illustrated in Figure 9.3.3.2-1 are preferred for general use. Dimensions and alternate designs are, in order of preference, described within MIL-K-25049 and MIL-H-8810 (most preferred), MIL-STD-1472, AFSC DH 2-2 and MIL-STD-1348.

4. Separation and arrangement:

a) Rotary selector switches shall be designed with a moving pointer and a fixed scale.

b) The pointer knob shall be mounted sufficiently close to its scale to minimize parallax error between the pointer and the scale markings. When viewed from the normal operator's position, the parallax error shall not exceed 25% of the distance between scale markings.

c) Switch design and scale placement shall be such that there is no reasonable possibility of confusing the pointer-end and nonpointer-end of a knob.

5. Resistance - Switch resistance shall be elastic, building up, then decreasing as each position is approached, so that the control snaps into position without stopping between adjacent positions. The torque required to turn the switch from one detent position to another shall be no less than 9 N-cm (12 in. oz) at breakout and no more than 70 N-cm (100 in. oz) just prior to dropping into the next detent position.

6. Direction of movement - The order of positions shall be such that clockwise movement indicates "on" ascending order, increased performance, etc.

(Refer to Paragraph 9.2.3.3.9, Control/Design Movement Compatibility - Design Requirements, for additional information of control movement.)

b. Continuous Rotary Control Knobs:

1. General:

a) Continuous rotary control knobs (e.g., rheostats, potentiometers) shall be used for precise adjustment of system parameters.

b) Continuous controls may be either single-turn or multiturn.

2. Displacement - Single-turn controls shall have a preferred standard deflection of 240 degrees, between limits located at the 8 o'clock and 4 o'clock positions.

3. Resistance - The torque required to reposition the knob shaft shall be 6 to 25 N-cm (8 to 36 in. oz).

c. Ganged Control Knobs:

1. Use - Use of ganged control knobs shall be limited to two-knob assemblies.

2. Limitations - Ganged knob configuration shall not be used under the following conditions.

a) Extremely accurate or rapid operations are required.

b) Frequent changes are necessary.

c) Heavy gloves may be worn by the operator.

3. Dimensions, torque and separation - Dimensions, torque and separation of ganged control knobs shall conform to Figure 9.3.3.3.1-1.

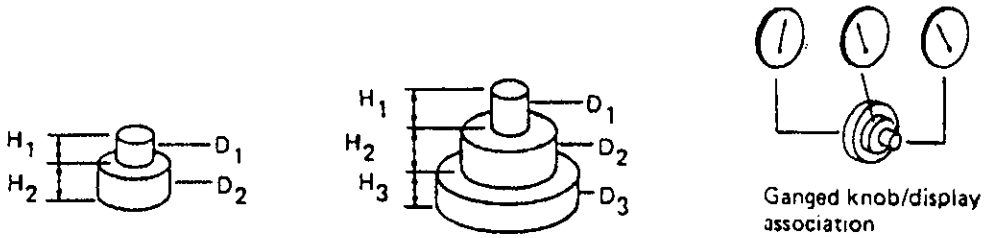

	Dimensions									
	Two knob assembly				Three knob assembly					
	H_1	H_2	D_1	D_2	H_1	H_2	H_3	D_1	D_2	D_3
Minimum	16 mm (5/8 in)	13 mm (1/2 in)	13 mm (1/2 in)	22 mm (7/8 in)	19 mm (3/4 in)	19 mm (3/4 in)	6 mm (1/4 in)	13 mm (1/2 mm)	44 mm (1·3/4 in)	75 mm (3 in)
Maximum				100 mm (4 in)						100 mm (4 in)

	Torque		Separation	
	To and including 25 mm (1 in) diameter knobs	Greater than 25 mm (1 in) diameter knobs	One hand individually Bare	Two hands simultaneously Bare
Minimum			25 mm (1 in)	50 mm (2 in)
Optimum			50 mm (2 in)	75 mm (3 in)
Maximum	32 mN·m (4·1/2 in · oz)	42 mN·m (6 in · oz)		

MSIS 235

Reference: 2, page 80

Figure 9.3.3.3.1-1. Ganged Control Knobs

4. *Serration of ganged control knobs:*

   a) Knobs shall be serrated.

   b) Fine serrations shall be used on precise adjustment knobs.

   c) Coarse serrations shall be used on gross adjustment knobs.

5. *Marking of ganged control knobs:*

   a) An indexing mark or pointer shall be provided on each knob.

   b) Marks or pointers shall differ sufficiently to make it apparent which knob indexing mark is being observed.

6. *Knob/display relationship - When each knob of a ganged assembly must be related to an array of visual displays, the knob closest to the panel shall relate to the left most display in a horizontal array, or the uppermost display in a vertical array (see Figure 9.3.3.3.1-1).*

7. Inadvertent operation - When it is critical to prevent inadvertent actuation of one knob as the other is being adjusted, a secondary knob control movement shall be required (e.g., pressing the top knob before it can be engaged with its control shaft).

9.3.3.3.2 Thumbwheel Control Design Requirements

{A}

Design requirements for thumbwheel controls are provided below.

a. Discrete Position Thumbwheels :

1. Discrete position thumbwheels shall have 10 or fewer detent positions.

2. The standard distance between positions shall be 36 ^{o}.

3. Maximum deflection shall be 360 ^{o} or less if 10 or fewer positions are required.

4. Each position around the circumference of a discrete thumbwheel shall have a slightly concave surface or shall be separated by a high-friction (e.g., knurled) area that is raised from the periphery of the thumbwheel.

5. Resistance shall be elastic, building up and then decreasing as each detent is approached so that the control snaps into position without stopping between adjacent detents. The resistance of discrete thumbwheel controls to movement shall be between 11 and 34 N-cm (16 to 48 in. oz).

6. Movement of the thumbwheel forward, up, or to the right shall produce an increase in the setting value.

b. Continuous Types Thumbwheels:

1. Continuous type thumbwheels shall have a standard deflection of 300°.

2. Hard stops shall be provided to limit the maximum travel of continuous thumbwheels.

3. Continuous thumbwheels shall employ high-friction raised areas to facilitate movement.

4. The resistance of continuous thumbwheel controls to movement shall be between 1 and 4 N-cm (2 and 6 in. oz.).

5. Movement of the thumbwheel forward, up, or to the right shall produce an increase in the setting value.

c. Coding:

1. Thumbwheel controls shall be coded by location, labeling, or color (e.g., reversing the colors of the least significant digit wheel as on typical odometers).

2. Where used as input devices, thumbwheel switch OFF or NORMAL positions shall be color coded to permit a visual check that the digits have been reset to these positions (if applicable).

9.3.3.3.3 Valve Control Design Requirements

{A}

Requirements for the design of valve controls are provided below.

a. Low-Torque Valves - Valves requiring 1 N-m (10 in-lb) or less for operation are classified as valves and shall be provided with a handle, 5.5 cm (2.25 in.) or less in diameter, (see "d" below).

b. Intermediate-Torque Valves - Valves requiring between 1 and 2 N-m (10 and 20 in-lb) for operation are classified as "intermediate torque" valves and shall be provided with a "central pivot" type handle 5.5 cm (2.25in.) or greater in diameter, or a "level (end pivot) type) handle, 7.5 cm (3 in.) or greater in length (the exact size shall be determined by the particular application).

c. High-Torque Valves - Valves requiring 2 N-m (20 in-lb) or more for operation are classified as valves and shall be provided with handles greater than 7.5 cm (3 in.) in length.

d. Handle Dimensions:

1. Valve handles shall approximate the configuration illustrated in Figures 9.3.3.3.3-1 and 9.3.3.3.3-2.

2. Handles shall be contoured and finished so as to permit ease of operation.

3. Circular handles, when used, shall have crowns or shall employ concave areas or convex projections along the periphery of the handle.

e. Valve Controls - Rotary valve controls shall open the valve with a counterclockwise motion.

9.3.3.3.4 Crank Design Requirements

{A}

Requirements for the design of cranks are provided below.

a. Dynamics:

1. Where cranks are used for tuning or other processes involving numerical selection, each rotation shall correspond to a multiple of 1, 10, 100, etc.

2. The gear ratio and dynamic characteristics of such cranks shall allow precise placement of the follower (e.g., crosshairs) without overshooting or undershooting and successive corrective movements.

b. Grip Handle - The crank grip handle shall be designed so that it turns freely around its shaft.

c. Dimensions, Resistance, and Separation - Dimensions, resistance, and separation between adjacent swept circular areas of cranks shall conform to the criteria of Figure 9.3.3.3.4-1.

d. Folding Handle - If a crank handle could become a hazard to persons passing by, or it is critical that the handle not be inadvertently displaced by being accidentally bumped, a folding handle type control shall be used. Such a control shall be designed so that the handle is firmly held in the extended position when in use and folded when not in use.

9.3.3.3.5 Handwheel Design Requirements

{A}

Requirements for the design of handwheels are provided below.

a. Restraints - When designed for use in microgravity, adequate restraints shall be provided for the operator.

b. Turning Aids - Knurling, indentation, high-friction covering, or a combination of these shall be built into the handwheel to facilitate operator grasp for applying maximum torque and to reduce the possibility of the wheel being jerked from the operator's hands.

c. Spinner Handles - For applications where the wheel may be rotated rapidly through several revolutions, a spinner handle may be added. Such handles shall not be used, however, if the projecting handle is vulnerable to inadvertent displacement of a critical wheel setting or if it creates a safety hazard.

9.3.3.3.6 Lever Design Requirements

{A}

Requirements for the design of levers are provided below.

a. Coding - When several levers are grouped in proximity to each other, the lever handles shall be coded.

(Refer to Paragraph 9.5.3.2, Coding Design Requirements, for additional information.)

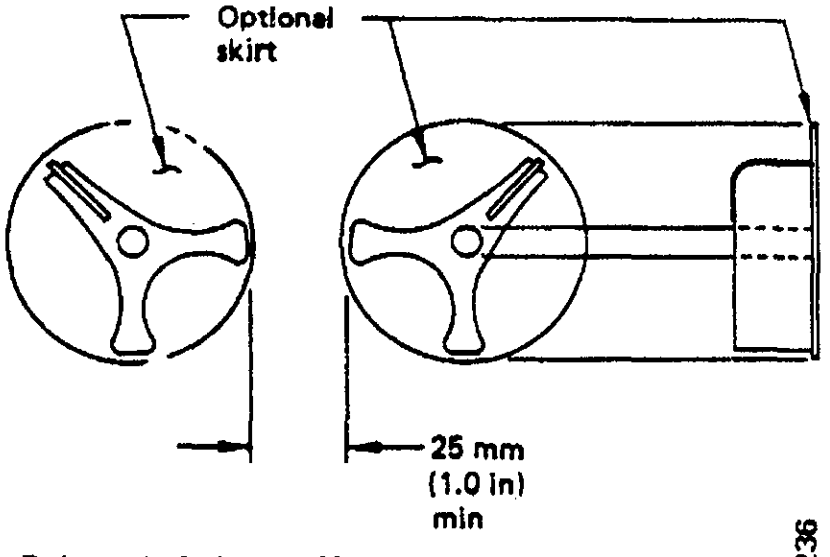

Reference: 194, page 16

MSIS-236

Figure 9.3.3.3.3-1. Valve Handle – Central Pivot Type

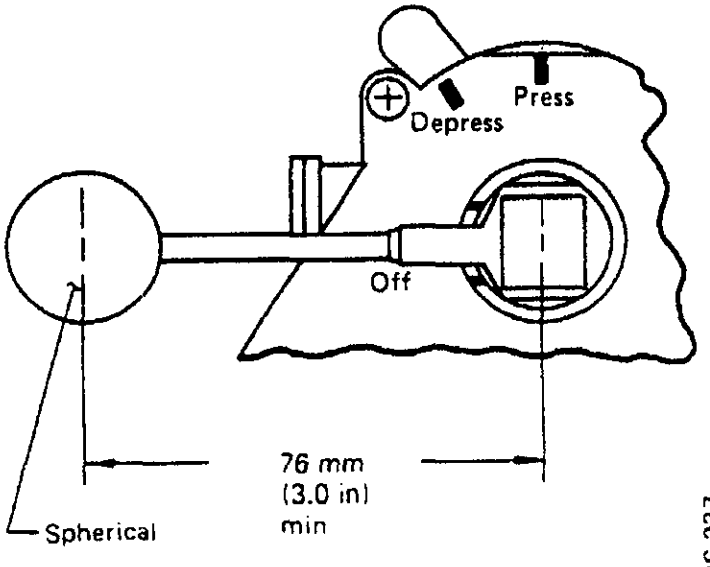

Reference: 194, page 16

MSIS-237

Figure 9.3.3.3.3-2. Valve Handle – Lever Type

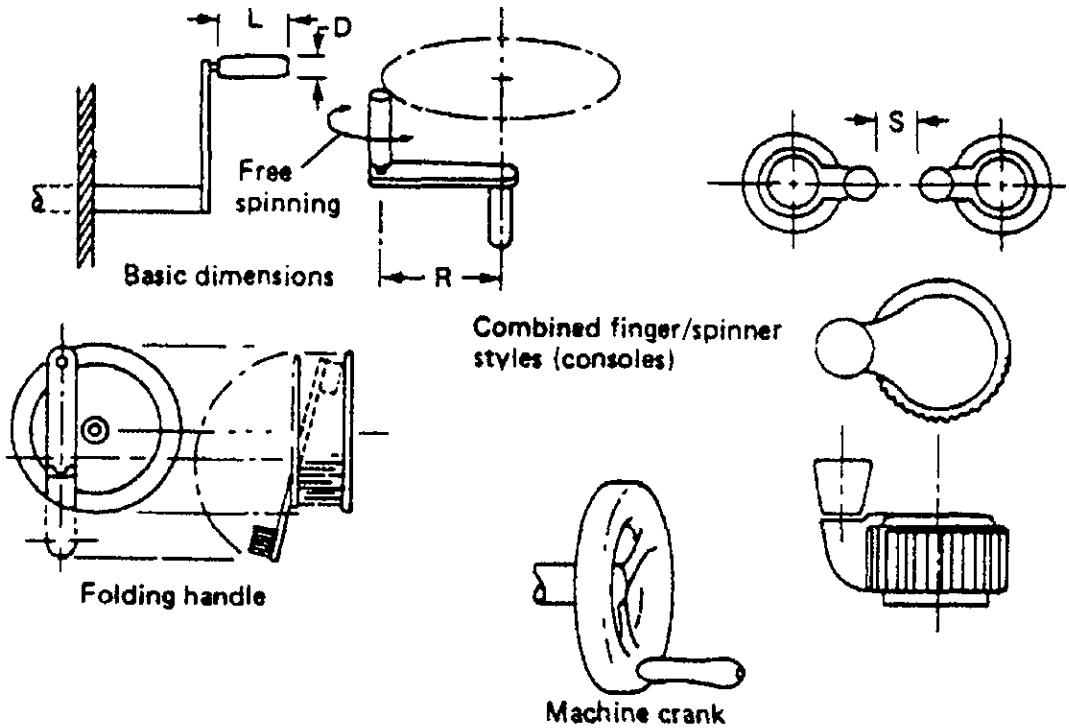

Load	Specification	Handle				R, Turning radius			
		L, Length		D, Diameter		Rate below 100 RPM		Rate above 100 RPM	
		mm	in	mm	in	mm	in	mm	in
Light loads Less than 22 N (5 lb) (wrist and finger movement)	Minimum	25	1	10	3/8	38	1-1/2	13	1/2
	Preferred	38	1-1/2	13	1/2	75	3	65	2-1/2
	Maximum	75	3	16	5/8	125	5	115	4-1/2
Heavy loads More than 22 N (5 lb) (arm movement)	Minimum	75	3	25	1	190	7-1/2	125	5
	Preferred	95	3-3/4	25	1	--	--	--	--
	Maximum	--	--	38	1-1/2	510	20	230	9

MSIS-238

S, Separation between adjacent controls: 75 mm (3 in) minimum
Reference: 2, page 83

Figure 9.3.3.3.4-1. Cranks

b. Length - The length of levers shall be determined by the mechanical advantage needed.

9.3.3.3.7 Toggle Switch Design Requirements

[A]

Requirements for the design of toggle switches are provided below.

a. Dimensions - Dimensions for a standard toggle switch shall conform to the values presented in Figure 9.3.3.3.7-1.

b. Indication of Actuation:

1. An indication of control actuation shall be provided (e.g., snap feel, audible click, associated or integral light).

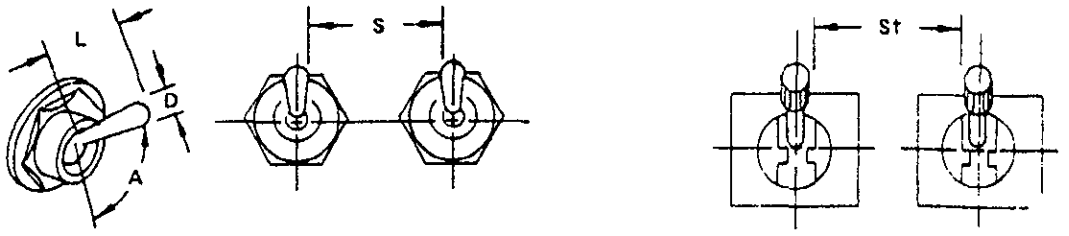

	Dimensions		Resistance	
	L Arm length	D Control tip	Small switch	Large switch
Minimum	13 mm (1/2 in)	3mm (1/8 in)	2.8 N (10 oz)	2.8 N (10 oz)
Maximum	50 mm (2 in)	25 mm (1 in)	4.5 N (16 oz)	11 N (40 oz)

	Displacement between positions	
	2 Position	A 3 Position
Minimum	30°	17°
Maximum	80°	40°
Desired		25°

	Separation			
	Single finger operation	†	S Single finger sequential operation	Simultaneous operation by different fingers
Minimum	19 mm (3/4 in)	25 mm (1 in)	13 mm (1/2 in)	16 mm (5/8 in)
Optimum	50 mm (2 in)	50 mm (2 in)	25 mm (1 in)	19 mm (3/4 in)

† Using a lever lock toggle switch

MSIS-239

Reference: 2, page 93

Figure 9.3.3.3.7-1. Toggle Switches

2. Switch design shall preclude stoppage between positions.

3. Visual verification of switch position shall be obtainable at a glance from any viewing angle.

c. Operating Force:

1. Operating force shall be in the range of 3 to 30 N (0.63 to 6.25 lbf).

2. The selected force value shall be dependent upon the specific application (e.g., high-force switches are especially suited for applications where positive-feel is important).

3. For lever-lock (pull-to-unlock) toggle switches, resistance of lift-to-unlock mechanisms shall not exceed 13 N (3 lbf).

d. Orientation - The preferred direction of toggle switch operation shall be vertical. Horizontal actuation of toggle switches shall be employed only for compatibility with the controlled function or equipment location.

e. Position Designation - Switch actuation shall control the system or subsystem functions as indicated in Figure 9.3.3.3.7-2.

f. Off Position - Where a third position is added for off, the off mode shall be located in the center position, except where this would compromise equipment performance. In this case, off shall be in the bottom position.

9.3.3.3.8 Pushbutton Design Requirements

{A}

Requirements for the design of pushbutton controls are provided below.

(Refer to Paragraph 9.3.3.3.15, Legend Switch Design Requirements, and 9.3.3.4, Computer Input Devices, for additional information on pushbutton devices.)

a. Activation:

1. Latching Pushbutton (push-on, lock-on) - The button displacement. Activation shall be indicated by a sudden drop in resistance and, if possible, an audible click.

2. Momentary Pushbutton (push-on, release-off) - Activation shall be indicated by positive feedback.

3. Alternate Action Pushbutton (push-on, push-off) - Activation shall be indicated by a sudden drop in resistance, an auditory click, and an associated display action.

4. Touch Sensitive (nonmechanical) - Activation shall be indicated by positive feedback.

b. Resistance - The resistance of pushbuttons to movement shall be 2.78 to 23.63 N (10 to 85 oz). The nominal force-resistance value shall be determined by the particular application and the environment in which it is operated.

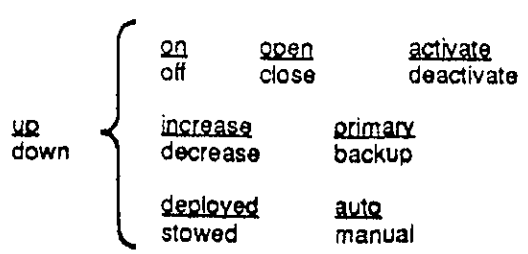

Reference: 1, pages 4.9-12

Figure 9.3.3.3.7-2. Toggle Switch Position Designation

MSIS-240

c. Dimension:

1. The standard shape of pushbuttons shall be rectangular.

2. Round pushbuttons shall be used when dictated by special functional or hardware considerations.

3. When a pushbutton surface is not concave, the surface shall provide a high degree of frictional resistance to prevent slipping.

4. T he height and width (or diameter, as applicable) of pushbuttons shall be 2 cm (0.75 in.) minimum and 4 cm (1.50 in.) maximum.

5. The illuminated area of pushbutton signal lights shall not be less than 3 cm^2 (0.40 $in.^2$) and not greater than 10 cm^2 (1.5 $in.^2$).

d. Displacement:

1. Momentary pushbuttons shall have a total displacement of 0.32 to 1.84 cm (0.125 to 0.725 in.).

2. Latching pushbuttons shall have a total displacement of 0.64 to 1.84 cm (0.250 to 0.725 in.).

3. Alternate action pushbuttons shall have a displacement of 0.32 to 1.84 cm (0.125 to 0.725 in.).

4. Pre-travel shall be 0.32 to 1.52 cm (0.125 to 0.6 in.).

5. Over-travel shall be 0.32 cm (0.125 in.) maximum.

9.3.3.3.9 Foot-Operated Switch Design Requirements

{A}

Design requirements for foot-operated switches are provided below.

a. Use:

1. Foot-operated switches shall be used only where the crewmember is likely to have both hands occupied when switch activation may be required, or when load sharing among limbs is desirable.

2. Because foot-operated switches are susceptible to accidental activation, their uses shall be limited to noncritical or infrequent operations such as press-to-talk communication.

3. Foot-operated switches shall be compatible with the restraint system being employed.

b. Operation:

1. Foot-operated switches shall be positioned for operation by the toe and the ball of the foot rather than by the heel.

2. Foot-operated switches shall not be located so near an obstruction that the crewmember cannot center the ball of the foot on the switch button.

3. A pedal may be used over the button to aid in location and operation of the switch.

4. Foot-operated switches shall be compatible with crewmember footwear.

c. Feedback - A positive indication of control activation shall be provided (e.g., snap feel, audible click, associated visual display).

9.3.3.3.10 Pedal Design Requirements

{A}

Design requirements for pedals are provided below.

a. Control Return:

1. Except for controls that generate a continuous output (e.g., rudder controls), pedals shall return to the original null position without requiring assistance from the crewmember (e.g., brake pedal).

2. For pedals in which the operator may normally rest the foot on the control between operations, sufficient resistance shall be provided to prevent inadvertent activation of the control (e.g., accelerator pedal).

b. Pedal Travel Path - The travel path shall be compatible with the natural articulation path of the operator's limbs (i.e., thigh, knee, ankle) for the gravity condition under which the control will be used.

c. Nonslip Pedal Surface - Pedals shall be provided with a nonslip surface.

9.3.3.3.11 Rocker Switch Design Requirements

{A}

Design requirements for rocker switches are provided below.

a. Positive Indication - An indication of control activation shall be provided (e.g., snap feel, audible click, associated or integral light).

b. Dimensions, Resistance, Displacement, and Separation - Dimensions, resistance, displacement, and separation between centers of rocker switches shall conform to the criteria in Figure 9.3.3.3.11-1. Resistance shall gradually increase, then drop when the switch snaps into position. The switch shall not be capable of being stopped between positions.

c. Orientation:

1. Where practicable, rocker switches shall be vertically oriented.

2. Activation of the upper wing of a rocker switch shall turn the equipment or component on, cause the quantity to increase, or cause the equipment or component to move forward, clockwise, to the right, or up.

3. Horizontal orientation of rocker switches shall be employed only for compatibility with the controlled function or equipment location.

9.3.3.3.12 Push-Pull Control Design Requirements

{A}

Design requirements for push-pull controls are provided below.

a. Handle Dimensions, Displacement, and Clearances - Handle dimensions, displacement, and clearances for push-pull control handles shall conform to criteria in Figure 9.3.3.3.12-1.

b. Rotation:

1. Except for combination push-pull/rotate switch configurations, push-pull control handles shall be keyed to a nonrotating shaft.

2. When the control system provides a combination push-pull/rotate functional operation using a round style knob, the rim of the knob shall be serrated to denote (visually and tactually) that the knob can be rotated, and to facilitate a slip-free finger grip.

c. Detents - Mechanical detents shall be incorporated into push-pull controls to provide tactile indication of positions.

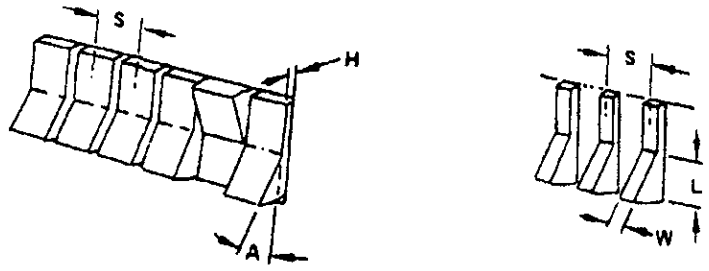

	Dimensions		Resistance
	W, Width	L, Length	
Minimum	6 mm (1/4 in)	13 mm (1/2 in)	2.8 N (10 oz)
Maximum			11 N (40 oz)

	Displacement		Separation (center-to-center)
	H, Ht, Depressed	A, Angle	S (bare hand)
Minimum	3 mm (1/8 in)	30°	19 mm (3/4in)

MSIS-241

Reference: 2, page 96

Figure 9.3.3.3.11-1. Rocker Switches

Configuration example	Application criteria	Design criteria				
		Dimensions			Displacement	Separation
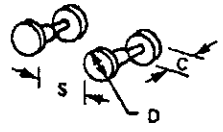	Push-pull control, low resistance, for two-position mechanical and/or electrical systems. Alternate three position plus rotary function acceptable for application such as vehicle headlight plus parking lights, panel and dome lights provide serrated rim.	D, min dia 19 mm (3/4 in)	C, min clearance 25 mm (1 in) Add 13 mm (1/2 in) for gloved hand		25 ± 13 mm (1 ± 1/2 in) min between pull positions 13 mm (1/2 in)	S, min space between 38 mm (1-1/2 in) Add 13 mm (1/2 in) for gloved hand
	Alternate handle; miniature electrical panel switch only. Avoid glove use application.	*D, min dia* 6 mm (1/4 in)	N/A	*L, min length* 19 mm (3/4 in)	*Minimum* 13 mm (1/2 in)	*S, min space* between 25 mm (1 in)
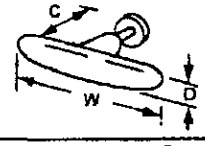	High-force push-pull, for two-position mechanical system only.	W, min width 100 mm (4 in)	D, depth 16-38 mm (5/8-1-1/2 in)	C, min clearance 38 mm (1-1/2 in) Add 6 mm (1/4 in) for gloved hand	Minimum 25 mm (1 in) Preferred 50 mm (2 in)	S, min space between 13 mm (1/2 in)
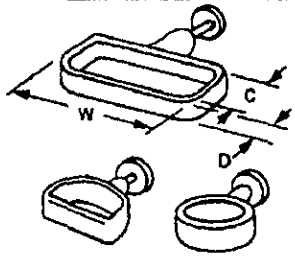	Same as above. Preferred where possible garment or cable-snag possibility exists. Note: 1 and 2 finger pulls also acceptable for less than 18 N (4 lb) applications.	W, min width 100 mm (4 in) Add 25 mm (1 in) for gloves	D, depth 16-38 mm (5/8-1-1/2 in)	C, min clearance 32 mm (1-1/2 in)	Minimum 25 mm (1 in) Preferred 50 mm (2 in)	

MSIS-242

Reference: 2, page 100

Figure 9.3.3.3.12-1. Push-Pull Controls

d. Action of push-pull controls shall be:

1. Pull towards the operator for ON or activation; push away for OFF or deactivation.

2. Clockwise for activation or increasing function of combination pull/rotary switches.

e. Resistance - Force for pulling a panel control with fingers shall be not more than 18 N (4 lb), for pulling a T-bar with four fingers shall be not more than 45 N (10 lb).

9.3.3.3.13 Circuit Breaker Design Requirements

{A}

Design requirements for circuit breakers are provided below.

a. General:

1. Circuit breakers shall be used for functions that require automatic protection against excessive electrical currents.

2. Circuit breakers shall be resettable.

3. Except for special cases, circuit breakers shall be of the plunger type (pull-to-release, push-to-reset).

4. All tripped conditions shall be visually indicated.

b. Dimensions - Preferred dimensions for handles of plunger and switch type circuit breakers are illustrated in Figure 9.3.3.3.13-1.

c. Separation and Arrangement - An edge-to-edge distance of 2.5 cm (1.0 in.) nominal, 1 cm (0.5 in.) minimum, shall exist between circuit breakers grouped in horizontal rows, which is the preferred arrangement. The distance between rows shall be a minimum of 2.5 cm (1.0 in.).

d. Displacement:

1. The tripped condition of the plunger-type circuit breaker shall be indicated by a white or silver band. When the circuit breaker is closed the band shall not be visible (see Figure 9.3.3.3.13-1).

2. The "off" or tripped condition of the switch type circuit breaker shall be indicated when the handle is in the "down" position (see Figure 9.3.3.3.13-1).

e. Resistance - The force required to reset a plunger-type circuit breaker shall not exceed 53 N (12 lb). The force required to manually trip a plunger type circuit breaker shall not exceed 35 N (8 lb).

9.3.3.3.14 Slide Switch Control Design Requirements

{A}

Design requirements for slide switch controls are provided below.

a. Dimensions, Resistance, and Separation:

1. Dimensions, resistance, and separation of slide switch handles shall conform to criteria in Figure 9.3.3.3.14-1.

2. Detents shall be provided for discrete control settings. Resistance shall gradually increase, then drop when the switch snaps into position.

3. The discrete control slide switch shall not be capable of stopping between positions.

b. Orientation - Where practical, slide switches shall be vertically oriented. Horizontal orientation or actuation of slide switches shall be employed only when necessary for compatibility with a controlled function or equipment location.

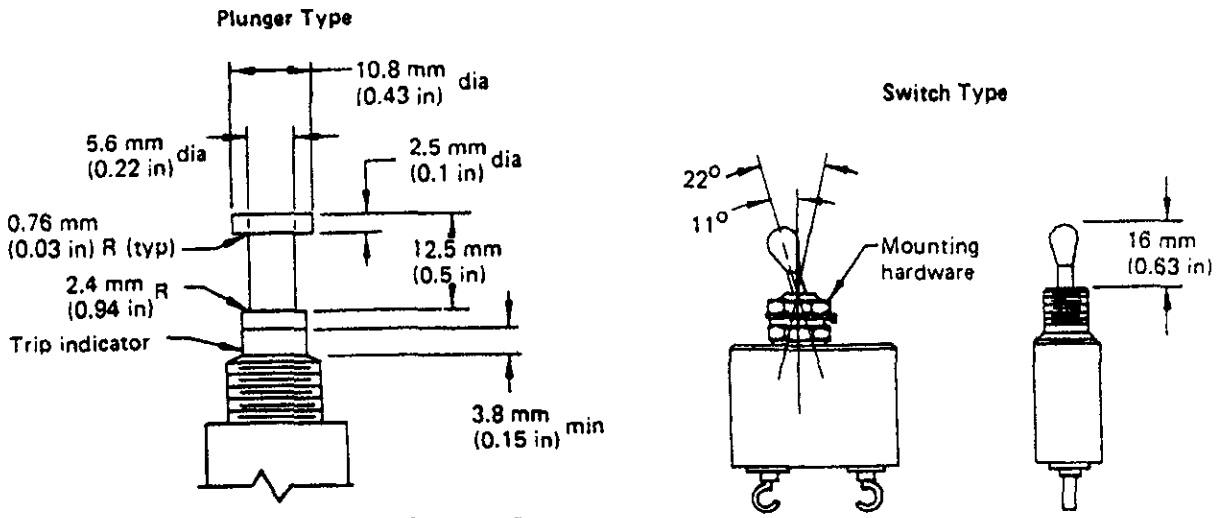

Reference: 194, page 22

MSIS-243

Figure 9.3.3.3.13-1. Circuit Breakers

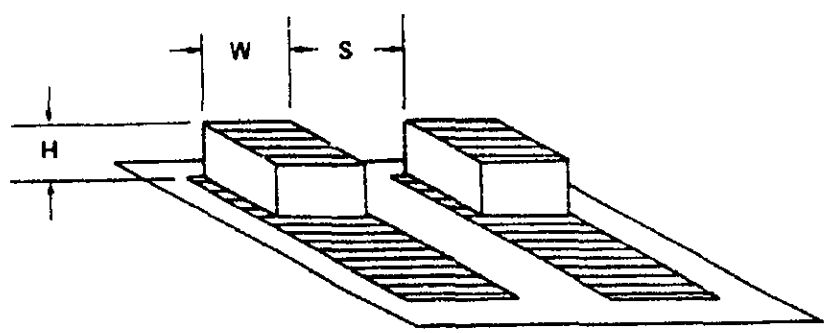

	Dimensions		Resistance	
	H Actuator height	W Actuator width	Small switch	Large switch
Minimum	6 mm (1/4 in)	6 mm (1/8 in)	2.8 N (10 oz)	2.8 N (10 oz)
Maximum	–	25 mm (1 in)	4.5 N (16 oz)	11 N (40 oz)

	Separation, S		
	Single finger operation	Single finger sequential operation	Simultaneous operation by different fingers
Minimum	19 mm (3/4 in)	13 mm (1/2 in)	16 mm (5/8 in)
Optimum	50 mm (2 in)	25 mm (1 in)	19 mm (3/4 in)

MSIS-244

Reference: 2, page 98

Figure 9.3.3.3.14-1. Slide Switches

c. Positive Indication - Slide-switch controls that are analog or involve more than two discrete positions shall be designed to provide positive indication of control setting, preferably a pointer located on the left side of the slide handle.

d. Switch Action - Moving the slide up or away from the operator shall result in turning the equipment or component on, causing a quantity to increase, or causing the equipment or component to move forward, clockwise, to the right, or up.

9.3.3.3.15 Legend Switch Design Requirements

{A}

Design requirements for legend switches are provided below.

(Refer to Paragraph 9.3.3.3.8, Pushbutton Design Requirements, for related information.)

a. Dimensions, Resistance, Displacement, and Separation - Dimensions, resistance, displacement, and separation between adjacent edges of legend switches shall conform to the criteria in Figure 9.3.3.3.15-1.

b. Barrier Height - Barrier height from panel surface shall conform to the criteria in Figure 9.3.3.3.15-1. Unless otherwise specified, barriers are required on critical switches and on switches likely to be inadvertently actuated. Barriers, when used, shall not obscure visual access to controls, labels or displays.

c. Other Requirements:

1. For positive indication of switch activation, the legend switch shall be provided with a detent or click. When touch sensitive switches are used, a positive indication of activation shall be provided, (e.g., an integral light within or above the switch being activated).

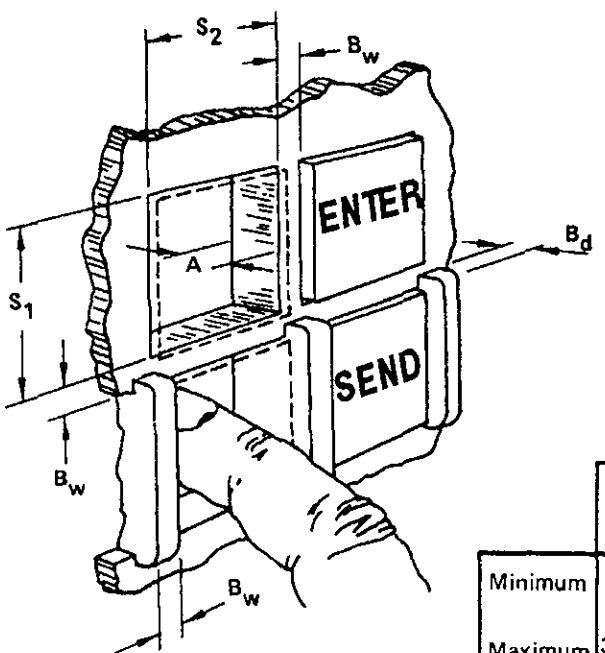

	S_1, S_2 Size	A Displacement	Barriers		Resistance
			B_w	B_d	
Minimum	19 mm* (3/4 in)	3 mm** (1/8 in)	3 mm (1/8 in)	5 mm (3/16 in)	2.8 N*** (10 oz)
Maximum	38 mm (1-1/2 in)	6 mm (1/4 in)	6 mm (1/4 in)	6 mm (1/4 in)	16.7N (60 oz)

Reference: 2, page 94 With Updates

Notes:

* 15 mm (5/8 in) where switch is not depressed below the panel

** 5 mm (3/16 in) for positive position switches

*** 5.6 N (20 oz) for use in moving vehicles

MSIS 245 Rev. A

Figure 9.3.3.3.15-1. Legend Switches

2. The legend shall be legible with or without internal illumination.

3. A lamp test or dual lamp/filament reliability shall be provided for switches if the mean time between failure (MTBF) is less than 100,000 hours.

4. Lamps within the legend switch shall be replaceable from the front of the panel by hand and the legends or covers shall be keyed to prevent the possibility of interchanging the legend covers.

5. Legend switches with integral LED's shall be replaceable from the front.

6. There shall be a maximum of three lines of lettering on the legend plate.

9.3.3.3.16 Printed Circuit (DIP) Switches Design Requirements

{A}

a. Use - The use of DIP switches shall be limited to nonroutine maintenance or troubleshooting applications.

b. Dimensions, Resistance, Displacement and Separation - Dimensions, resistance, displacement, and separation between adjacent DIP switch actuators shall conform to the following:

1. Dimensions of actuator shall be sufficiently high to permit error-free manipulation by the operator when using some commonly available stylus (e.g., pencil or pen). The design of the actuators shall not require the use of a special tool for manipulation.

2. Actuator resistance shall be sufficiently high to avoid inadvertent activation under expected use conditions. Resistance shall gradually increase, then drop when the actuator snaps into position. The actuator shall not be capable of stopping between positions.

3. When actuators are slide type, they have sufficient travel (displacement) to permit easy recognition of switch settings. At a minimum, the travel shall be twice the length of the actuator. When actuators are rocker type, the actuated wing shall be flush with the surface of the panel.

4. Actuators shall have sufficient separation to permit error-free manipulation by the operator (i.e., the stylus cannot inadvertently contact adjacent actuators).

c. Shape - The surface of the actuator shall be indented to accept the point of the stylus. The indentation shall be sufficiently deep to avoid slippage of the stylus during manipulation.

9.3.3.3.17 Key-Operated Switch Design Requirements

{A}

Key operated controls should be used when system requirements dictate that the function being controlled should be secured against activation by unauthorized personnel. If key operated controls cannot be justified in terms of security, they are probably not necessary and should not be used. Key operated switches should not be used solely as a means of shape coding.

Design requirements for key-operated switches are provided below.

a. Dimensions, Displacement, and Resistance - Dimensions, displacement, and resistance shall conform to the criteria in Figure 9.3.3.3.17-1.

b. Color, Shape, and Size Coding:

1. If color is used to aid in identifying various keys by function or use location, Red (#11105 or 21105 of FED-STD-595) shall be reserved for emergency functions.

2. If shape coding is used when it is desirable to identify a given key by feel, sharp corners shall be avoided.

3. If size coding is used, no more than two sizes shall be employed. Dimensions shall reflect the minima and maxima shown in Figure 9.3.3.3.17-1.

c. Markings and Labeling - Key-operated switch applications shall include appropriate positional markings and labels.

d. Other Requirements:

1. Keys with teeth on both edges shall fit the lock with either side up or forward with respect to the normal position of the operator.

2. Keys with a single row of teeth shall be inserted into the lock with the teeth pointing up or forward with respect to the normal position of the operator.

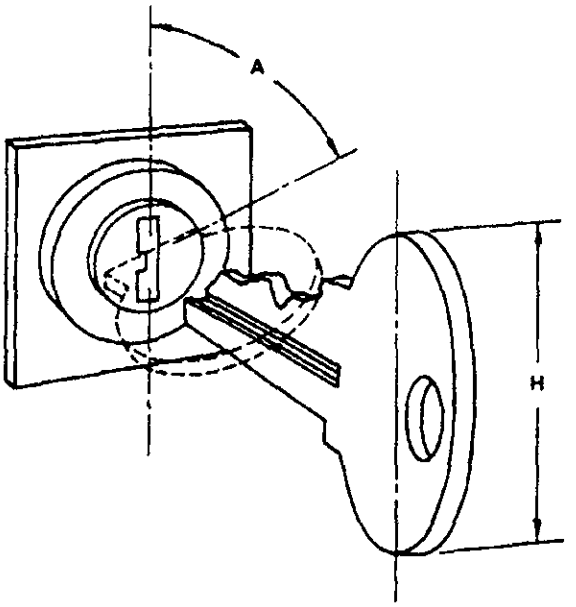

	Displacement A	Height H	Resistance
Minimum	30°	13 mm (1/2 in)	115 mN·m (1 in–lb)
Maximum	90°	75 mm (3 in)	680 mN·m (6 in–lb)

Reference: 2, page 74

MSIS-246

Figure 9.3.3.3.17-1. Key Operated Switch

3. Locks shall be oriented so the key's vertical position is the OFF position.

4. Operators shall normally not be able to remove the key from the lock unless the switch is turned OFF.

5. Activation of an item by a key-operated switch shall be accomplished by turning the key clockwise from the vertical OFF position.

9.3.3.4 Computer Input Devices

{A}

9.3.3.4.1 Keyboard Design Requirements

{A}

Requirements for keyboard design are provided below.

9.3.3.4.1.1 Layout

{A}

a. Alphanumerics - The basic alphanumeric character arrangement for standard keyboards shall conform to USA Standard Typewriter Pairing of the American Standard Code for Information Interchange (ASCII). See Figure 9.3.3.4.1.1-1.

b. RESERVED

c. Number keypad - When appropriate, a number keypad shall be added to the keyboard. This shall be to the right-hand side of the main keyboard, if workstation layout permits. The arrangement of the numeric keypad shall conform to Figure 9.3.3.4.1.1-2.

d. Function keys - The use of function keys will depend on the specific system that the keyboard is a part of.

1) Keying Process - Function keys shall be used to make the keying process faster and to minimize keying errors where fast response is required (e.g., contingencies).

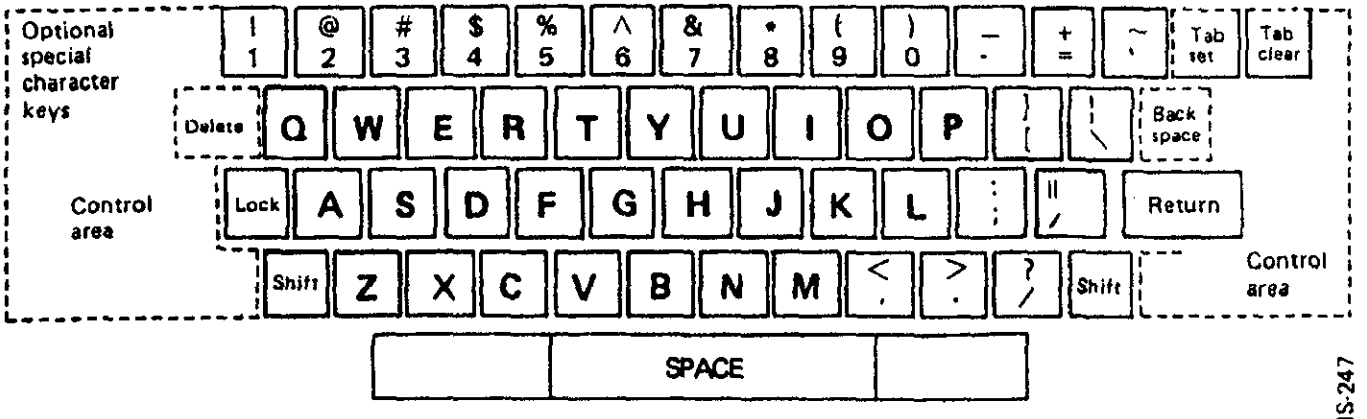

Reference: 279, page 8-1

Figure 9.3.3.4.1.1-1 Keyboard Layout

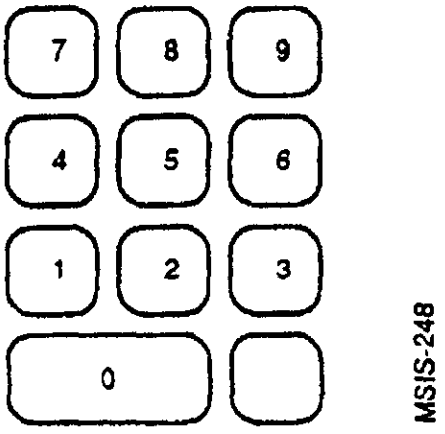

Figure 9.3.3.4.1.1-2 Numeric Keyboard

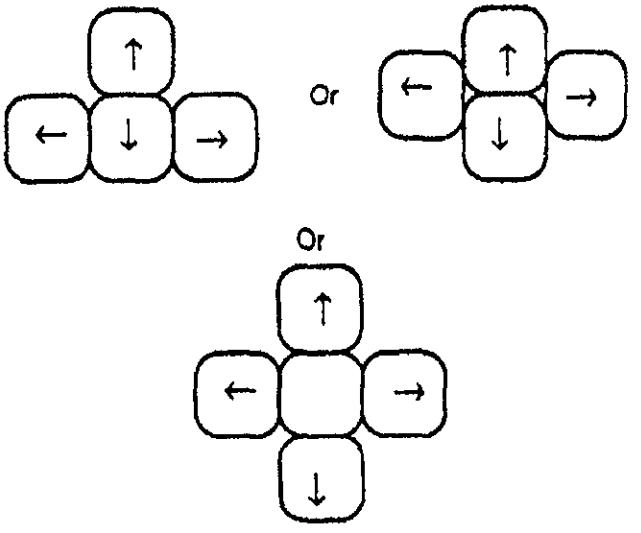

Reference: 279, page 8-1

MSIS249 Rev. B

Figure 9.3.3.4.1.1-3 Cursor Movement Keys

2) Location of Function Keys - Certain functions that occur most frequently or that tend to occur together should be placed in the same area.

3). Function key types:

a) Fixed-function keys - Fixed -function keys shall be provided for functions that are widely and frequently used. Examples of commonly used fixed function keys are RESET, BREAK, TRANSMIT, CONTROL, and a means of cursor control.

b) Cursor movement keys - Cursor movement keys shall be arranged in a spatial configuraiton reflecting the direction of actual cursor movement (See Figrue 9.3.3.4.1.1-3).

c) Variable-function keys - Variable-function keys (user programmable) shall be provided whenever the key function may potentially change.

4) Minimization of Errors - The keyboard layout shall minimize the effect of likely errors, especially those that are critical. For instance, the delete key shall never be located next to the send key or other frequently used keys.

5) Non-ASCII Key Locations - The locations of keys which are not defined by the ASCII USA Standard Typewriter Pairing shall be located using the following guidelines.

a) Frequently Used Keys - Frequently used non-ASCII keys shall be placed in the location in which they are most convenient to use.

b) Potentially Destructive Keys - Non-ASCII keys with potentially destructive consequences shall be physically or locally.

c) Grouping - If possible, non-ASCII keys shall be grouped in some logical pattern (e.g., purpose, frequency of use, and type of response) and the user informed of this grouping.

9.3.3.4.1.2 General

{A}

a. Keyboards design commonalty - There shall be a single design for a keyboard, particularly in relation to the location of keys, and it shall be used throughout the space module.

b. Control switches - All commonly used controls associated with keyboard functioning (e.g., on/off) shall be readily accessible to the user. Both the control and its labeling shall be visible to the user.

c. Key markings - The key labels shall be placed on the keys in such a way as to be resistant to wear and abrasion. If the label cannot be placed on the key, it shall be placed above it.

d. Finger placement aids - The standard keyboards and the shall be distinguishable to the touch to facilitate the correct placement of the fingers for touch typists.

e. Microgravity placement - For microgravity operating conditions, the keyboard placement shall be compatible with the neutral body posture and the restraint system being employed.

f. Operating force - The preferred operating force of a terminal keyboard shall be 0.5 N (1.75 oz).

g. Key displacement - The recommended key displacement for activation is approximately 2.0 mm (0.08 in.) with bottoming-out occurring at about 4.0 mm (0.16 in.).

h. Feedback:

1) The screen shall provide visual feedback each time a key is activated.

2) Auditory feedback indicating key activation shall be provided. User shall have the option of deactivating this feedback.

3) Kinesthetic feedback in the form of a distinct when keys are maximally depressed.

i. Keyboard interlock - A keyboard interlock shall exist to prevent the outputs from two or more simultaneously depressed keys from either jamming the print mechanism or outputting an invalid keycode.

j. Size and shape of keys - The shape of keys shall:

1) Aid the accurate location of the user's fingers.

2) Minimize reflections.

3) Provide a suitable surface for the key legends.

4) Be neither sharp nor uncomfortable to press.

5) Have a dished profile curvature for improved keyboarding accuracy.

k. Key legend - The key legends shall be explicit and easy to understand. Alphanumeric legends shall not be smaller than 3.0 mm (0.12 in.).

l. Color and reflection of keys :

1) The surface of keys shall have a matte finish to reduce glare.

2) For standard keys, the primary color shall be neutral, e.g., beige or gray, rather than a color that has a high reflectance like white.

m. Function key labels - Function keys shall be labeled with standard function symbols, the function title, function title abbreviations, or function codes, in that order of preference.

n. Key Repeat - Alphanumeric an dsymbol character keys should automatically repeat when held down. The repeat should have a user selectable delay with a default of 0.5 second. The physical release of the key should terminate the repeat.

o. Key spacing - The spacing of keys shall be as indicated in Figure 9.3.3.4.1.2-1.

p. Noise Level - The "click" feedback of a keystroke shall be able to be turned off by the user on all keyboards.

9.3.3.4.2 Joysticks Design Requirements

{A }

Design requirements for isotonic and isometric joysticks are provided below.

a. Isotonic Joystick:

1. Movement shall be smooth in all directions, and rapid positioning of a follower on a display shall be attainable without noticeable backlash, cross-coupling, or the need for multiple corrective movements.

2. Control ratios, frictions, and inertia shall meet the dual requirements of rapid gross positioning and precise fine positioning.

3. When used to create free-drawn graphics, the refresh rate for the follower on the VDT shall be sufficiently high to ensure the appearance of a continuous track.

	Dimensions	Resistance		
	Key width Bare-handed	Numeric	Alpha-numeric	Dual function
Minimum	10 mm (0.385 in.)	1 N (3.5 oz)	250 mN (0.9 oz)	250 mN (0.9 oz)
Maximum	19 mm (0.75 in.)	4 N (14.0 oz)	1.5 N (5.3 oz)	1.5 N (5.3 oz)
Preferred	13 mm (0.5 in.)			

	Displacement			Separation
	Numeric	Alpha-numeric	Dual function	(between adjacent key tops)
Minimum	0.8 mm (0.03 in.)	1.3 mm (0.05 in.)	0.8 mm (0.03 in.)	6.4 mm (0.25 in.)
Maximum	4.8 mm (0.19 in.)	6.3 mm (0.25 in.)	4.8 mm (0.19 in.)	
Preferred				6.4 mm (0.25 in.)

MSIS-250

Reference: 2, page 91

Figure 9.3.3.4.1.2.-1 Keyboard Dimensions

4. The delay between control movement and the confirming display response shall not exceed 0.1 second.

5. Dimensions, resistance, and clearance shall conform to criteria in Figure 9.3.3.4.2-1.

6. The joystick shall be placed so as not to interfere with other controls.

7. Joystick placement shall allow effective operation when the operator is using the restraint system provided and maintaining an optimum viewing position with respect to the VDT.

b. Isometric Joystick

1. The output shall be proportional to the magnitude of the applied force as perceived by the operator.

2. The isometric joystick shall deflect minimally in response to applied force, but may deflect perceptibly against a stop at full applied force.

3. Isometric joysticks shall be used only when the primary feedback is not kinesthetic, but of some other form (e.g., visual).

9.3.3.4.3 Light Pen Design Requirements

{A}

Requirements for the use of light pens are provided below.

a. Activating Device:

1. Light pens shall be equipped with an activating device. If the activating device is a pushbutton switch located at the tip, the force required shall be from 0.6 N to 1.4 N (2 to 5 oz).

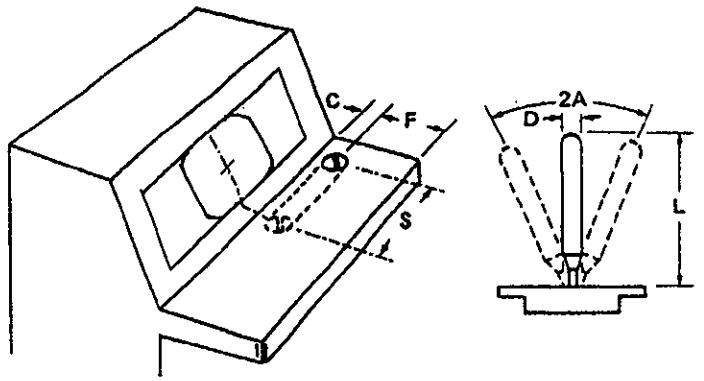

	Dimensions		Resistance	Displacement	Clearance		
	Dia, D	Length, L		A	Display ℄ to stick ℄, S	Around stick, C	Stick to shelf front, F
Minimum	6.5 mm (0.25 in)	75 mm (3 in)	3.3 N (12 oz)		0		120 mm (4.75 in)
Maximum	16 mm (0.62 in)	150 mm (6 in)	8.9 N (32 oz)	45 deg	400 mm (15.75 in)	*	250 mm (9.88 in)

* Maximum stick excursion plus 100 mm (4 in)

Reference: 279, page 8-5 With Updates

MSIS-251 REV A

Figure 9.3.3.4.2-1. Isotonic Joystick

2. Feedback shall be provided when the activating device is operated.

b. Position Indication - The computer software for light pens shall display a cursor under the light pen position. The cursor shall be large enough to be seen under the point of the light pen and shall move with the light pen.

c. Feedback - Indication shall be provided that input by the light pen has been received.

d. Dimensions - Light pens shall be between 11.9 and 18.0 cm (4.7 and 7.1 in.) long and 0.8 and 2.0 cm (0.3 and 0.8 in.) in diameter.

e. Storage - Light pens shall be capable of being attached when not in use.

f. Follower Movement - Light pens shall provide a smooth movement of the follower when used as a two-axis controller. The refresh rate for the follower shall be high enough to ensure the appearance of a continuous track whenever it is used to create graphics input.

9.3.3.4.4 Mouse Design Requirements

[A]

Design requirements for a mouse control device are provided below.

a. Use - A mouse is best used to select screen position rapidly through movement of the follower and shall be used for zero-order control only (i.e., generation of x and y-outputs by the controller results in proportional displacement of the follower) or rate control (i.e., cursor movement is proportional to rate of mouse movement), selectable by the user.

b. Operator Accuracy - The mouse shall be designed and placed on the maneuvering surface to allow the operator to orient it consistently to within +/- 10° of the correct orientation without visual observation. For example, when the operator grasps the mouse in what seems to be the correct orientation and moves it in a straight line along what is assumed to be the y-axis, then the direction of movement of the follower on the VDT shall be between 350° and 10°.

c. Mouse Accuracy - The mouse shall be easily movable in any direction without a change of grip and shall result in smooth movement of the follower in the same direction (+/- 10°).

d. Handedness - The mouse shall be operable with either hand.

e. Cursor Control - The controller shall not drive the cursor to a non-visible portion of the display area..

f. Dimensions and Shape - The mouse shall have no sharp edges with limiting dimensions as indicated in Figure 9.3.3.4.4-1.

g. Discrete Activation - Where activation switches are required on the mouse they shall be limited to no more than three and the buttons shall be operable with normal grip.

h. Activation Surface - A surface which has a texture suited to mouse use and that is conveniently located shall be provided when a mouse is to be used.

i. Stowage - The mouse shall be removable and/or stowable.

j. Mouse/Keyboard Integration - The system shall be designed so that the user does not have to alternate frequently between the mouse and the keyboard.

	Min	Max
Width (spanned by thumb to finger grasp)	40 mm (1.6 in)	70 mm (2.8 in)
Length	70 mm (2.8 in)	120 mm (4.7 in)
Thickness	25 mm (1.0 in)	40 mm (1.6 in)

Reference: 279, page 8-7

MSIS-252

Figure 9.3.3.4.4-1. Mouse Dimensions

9.3.3.4.5 Track Ball (Rolling Ball) Design Requirements

{A}

Design requirements for a track ball control device are provided below.

a. Zero-Order Control - A track ball shall be used for zero order control (i.e., a given movement of the ball produces a proportional movement of the follower on the display) or rate control (i.e., cursor movement is proportional to rate of ball movement), selectable by the user.

b. Cursor Control - The controller shall not drive the cursor to a non-visible portion of the display area.

c. Location - Track ball placement shall allow efficient use of the device by crewmembers using workstation restraints and maintaining optimum view of associated VDT. The track ball shall be operable with either hand.

d. Dimensions, Resistance, and Clearance - Track ball dimensions, resistance, and clearance shall conform to the criteria in Figure 9.3.3.4.5-1.

e. Ball Diameter - The smaller diameter ball controls (Figure 9.3.3.4.5-1) shall be used only where space availability is very limited and when there is no need for precision.

f. Track Ball/Keyboard Integration - The system shall be designed so that the user does not have to alternate frequently between the track ball and the keyboard.

9.3.3.4.6 Stylus and Grid Design Requirements

{A}

Design requirements for a stylus and grid control device are provided below.

a. Input - Movement of the stylus on the grid surface shall result in a smooth movement of the follower in the same direction.

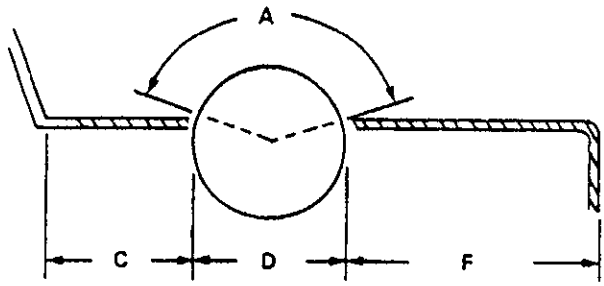

	Dimensions		Resistance		Clearance		
	Diameter, D	Surface exposure, A	Precision required	Vibration or accel conditions	*	Around ball, C	Ball to shelf front, F
Minimum	50 mm (2 in)	100 deg			0	50 mm (2 in)	120 mm (4.75 in)
Maximum	150 mm (6 in)	140 deg	1.0 N (3.6 oz)	1.7 N (6 oz)	320 mm (12.62 in)		250 mm (9.75 in)
Preferred	100 mm (4 in)	120 deg	0.3 N (1.1 oz)				

* Lateral distance from display centerline to ball centerline

Reference: 279, page 8-8

MSIS-253

Figure 9.3.3.4.5-1. Trackball Design

b. Stylus/Grid Correspondence - Discrete placement of the stylus at any point on the grid shall cause the follower to appear at the corresponding coordinates and to remain steady in position provided the stylus is not moved.

c. Refresh Rate - The refresh rate for the follower shall be sufficiently high to ensure the appearance of a continuous track whenever the stylus is used for generation of free-drawn graphics.

d. Remote Grid Size - Remote grids shall approximate the display size whenever possible.

e. Remote Grid Placement - Remote grids shall be at an orientation that maximally preserves the directional relationships between them and the display without violating any anthropometric considerations (e.g., a vertical plane passing through the north/south axis on the grid shall be parallel to the north/south axis on the display).

f. Storage - The stylus shall be storable in a retracted position. Retraction shall be activated automatically when the user releases the stylus. During use, tension on the cable shall be equivalent to the 1g weight (+/- 20%) of the stylus.

9.3.3.4.7 Touch-Sensitive Display Design Requirements

{A}

Design requirements for touch-sensitive displays are provided below.

a. Touch Area Indication - The touch-sensitive areas of a display shall be indicated..

b. Touch Area Size - The touch area shall be large enough so that adjacent touch areas are not accidentally activated.

c. Touch-Sensitive-Display/Keyboard Integration - The system shall be designed so that the user does not have to alternate frequently between the touch display and other computer input devices.

d. Feedback - Positive feedback indicating that a touch has been registered shall be provided.

e. Inadvertent Activation - Inadvertent activation of the touch-sensitive device shall be precluded.

9.3.3.4.8 Bar Code Reader Design Requirement

{A}

Requirements for the design of bar code readers are provided below.

a. Use - Bar code readers (or other computer access devices) shall be used as an interface between equipment and associated data base information whenever appropriate (e.g., inventory control, maintenance procedures, etc.).

b. Ease of Use - Bar code readers shall be easy and fast to operate.

c. Orientation Flexibility - Bar code readers shall allow flexibility in the orientation match between the reader and the label to be read that is necessary for successful recognition.

d. Success Rate - Bar code readers shall successfully read the intended labels on a high percentage of passes.

9.3.3.5 Speech Transmission Equipment Design Requirements

{A}

Requirements for the design of speech transmission equipment are provided below.

a. Frequency - Microphones and associated system-input devices shall be designed to respond optimally to that part of the speech spectrum most essential to intelligibility (i.e., 200 to 6,100 Hz). Where system engineering necessitates speech-transmission bandwidths narrower than 200 to 6,100 Hz, the minimum acceptable frequency range shall be 250 to 4,000 Hz.

b. Dynamic Range - The dynamic range of a microphone used with a selected amplifier shall be great enough to admit variations in signal input of at least 50 dB.

c. Noise-Cancelling Microphones - In very loud, low-frequency noise environments (100 dB overall), noise-cancelling microphones shall be used and shall be capable of effecting an improvement of not less than 10 dB peak speech to root-mean-square-noise ratio as compared with non-noise-cancelling microphones of equivalent transmission characteristics.

d. Pre-emphasis - If necessary, speech system input devices shall employ frequency pre-emphasis with a positive slope frequency characteristic no greater than 18 dB per octave from 140 to 1,500 Hz and no greater than 9 dB per octave over the frequency range 1,500 to 4,800 Hz when no clipping is used.

e. Peak-Clipping of Speech Signals - Where speech signals are to be transmitted over channels showing less than 15 dB peak speech to root-mean-square-noise ratios, peak-clipping of 12 to 20 dB may be employed at system input and may be preceded by frequency pre-emphasis as specified in "d" above.

f. Noise Shields - When the talker is in an intense noise field, the microphone shall be put in a noise shield. Noise shields shall be designed to meet the following requirements.

1. A volume of at least 250 cm^3 (15.25 in^3) to permit a pressure gradient microphone to function normally.

2. A good seal against the face with the pressure of the hand or the tension of straps.

3. A hole or combination of holes covering a total area of 65 mm^2 (0.1 in^2) in the shield to prevent pressure buildup.

4. Prevention of a standing wave pattern by shape, or by use of sound-absorbing material.

5. No impediment to voice effort, mouth or jaw movement, or breathing.

g. Speaker/Side Tone - The speaker's verbal input shall be in phase with its reproduction as heard on the headset. This side tone shall not be filtered or modified before it is received in the headset.

(Refer to Section 9.4.3.3 Audio Displays - Design Requirements, for further information.)

9.3.3.6 Operating Controls for Voice Communication Equipment Design Requirements

{A}

Requirements for the design of operating controls for voice communication equipment are provided below.

a. Volume Controls:

1. Accessible volume or gain controls shall be provided for each communication receiving channel (e.g., loudspeakers or headphones) with sufficient electrical power to drive sound pressure level to at least 110 dB overall when using two earphones.

2. The sound pressure level (SPL) shall be maintained within 3 dB over the atmospheric pressure range of 9 psi to 14.7 psi.

3. The minimum setting of the volume control shall be limited to an audible level, i.e., it shall not be possible to inadvertently disable the system with the volume control.

(Refer to Paragraph 5.4.3.2.2, Voice Communications Noise Exposure Requirements, for additional information.)

4. Separation of power (on-off) and volume control adjustment functions into separate controls is preferred. However, should conditions justify their combination, a noticeable detent position shall be provided between the OFF position and the lower end of the continuous range of volume adjustment. When combined power and volume controls are used, the OFF position shall be labeled.

b. Squelch Control - Where communication channels are to be continuously monitored, each channel shall be provided with a signal-activated switching device (squelch control) to suppress channel noise during no-signal periods. A manually operated, on-off switch, to deactivate the squelch when receiving weak signals, shall be provided.

9.3.3.7 Speech Recognition Design Requirements

{A}

Requirements for the design of speech recognition are provided below:

a. Natural Language - The need for exaggeration in speech and interword delays shall not be required.

b. Work Gaps - Provisions shall be made for the user to use word gaps of silence to reliably identify word boundaries for continuous speech recognition.

c. Vocabulary - Vocabulary elements shall be selected to eliminate easily confused commands.

d. Background Noise - For speech input, interfering background noise up to the levels specified in 5.4.3 shall be tolerated by the system.

e. Reject Capability - Provide a reject capability so that inadvertent sounds)(e.g., sneezes, coughs, throat clearing, and non-command words) do not produce incorrect recognition decisions.

A. Guards for Toggle Switches	
Equipment description	Crew rank, use, and comments
Recessed toggle with guards 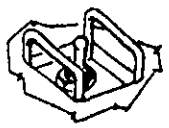	Order of preference—1 (mean score, 7.29) Use—ATM panel, circuit breaker panels, workshop. Crew comments—Good for situations where used in Skylab. Guards are good restraints for actuating toggle.
Toggle with rounded guards 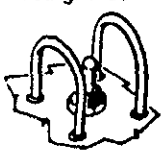	Order of preference—2 (mean score, 7.14) Use—Blood pressure measurement, EES, lower workshop. Crew comments—Same as for recessed toggle with guards
Latching toggle with guards 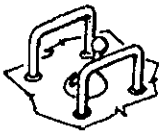	Order of preference—3 (mean score, 7.00) Use—ATM panel. Crew comments—Best for safety-critical, infrequently used switches and circuit breakers.
Solid guards	Order of preference—4 (mean score, 6.29) Use—Waste processors. Crew comments—Same as for rounded guards.
Deep recess guarded toggle 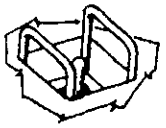	Order of preference—5 (mean score, 6.14) Use—Metabolic analyzer, ESS, lower workshop. Crew comments—Best for seldom used switches.
Toggle with side guards and solid top 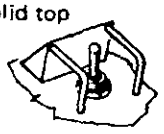	Order of preference—6 (mean score, 6.14) Use—M092 LBNPD experiment, lower workshop. Crew comments—Poor if used a lot.

A. Guards for Toggle Switches	
Equipment description	Crew rank, use, and comments
Toggle with deep, wide recess	Order of preference—7 (mean score, 5.67) Use—Waste processors (without guard), airlocks. Crew comments—None
Toggle with guards 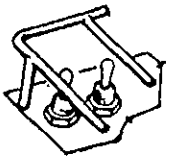	Order of preference—8 (mean score, 5.01) Use—Condensate control system, airlocks. Crew comments—Sometimes inadvertently actuated by feet or equipment. Guard can double as handholds, which is not desirable.
Doubly guarded toggles 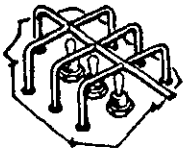	Order of preference—9 (mean score, 4.71) Use—Boom controls, MDA hatch. Crew comments—Hard to operate. Value increased as frequency of use decreased. Hard to read nomenclature.
Guard cover locking toggle 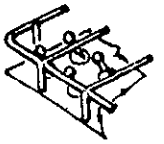	Order of preference—10 (mean score, 4.57) Use—Power system, control and power disconnect, STS panels. Crew comments—Harder to operate than the latching toggle with individual side guards.
Guard directly over toggles 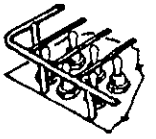	Order of preference—11 (mean score, 4.14) Use—Circuit breaker panels, lower workshop. Crew comments—Sometimes inadvertently actuated. Guard obscures label of switch.

MSIS-254

Reference: 1, page C-9 to C-21

Figure 9.3.4-1. Examples of Skylab Controls

B. Guards for Dials	
Equipment description	Crew rank, use, and comments
Completely recessed dials	Order of preference—1 (mean score, 6.50) Use—Circuit breaker panels, lower workshop. Crew comments—Very good. Easy to use.
Locking vernier dial	Order of preference—2 (mean score, 5.00) Use—Metabolic analyzer, ESS, lower workshop. Crew comments—Not for general use.
Dial with lock ring at base	Order of preference—3 (mean score, 4.33) Use—Solar radio noise burst, monitor MDA. Crew comments—Too difficult to operate.

C. Two-Mode Select	
Equipment description	Crew rank, use, and comments
Two-position toggle	Order of preference—Not statistically significant (mean score, 7.00) Use—Waste processor bus select, lower workshop. Crew comment—None.
Two separate buttons 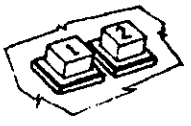	Order of preference—Not statistically significant (mean score, 6.86) Use—Human vestibular function, lower workshop. Crew comments—None.
Two-position dial	Order of preference—Not statistically significant (mean score, 6.57) Use—Human vestibular function, lower workshop. Crew comments—None.

C. Two-Mode Select	
Equipment description	Crew rank, use, and comments
Side-to-side toggle	Order of preference—Not statistically significant (mean score, 6.57) Use—ATM panel, MDA. Crew comments—None.

D. Three-Mode Select	
Equipment description	Crew rank, use, and comments
Three position dial	Order of preference—1 (mean score, 7.29) Use—EGG axis select-ESS, lower workshop. Crew comments—None.
Three position toggle	Order of preference—2 (mean score, 6.17) Use—Heart acceleration and mode sequence-ESS, lower workshop. Crew comments—Has parallax problems.

E. On-Off/Mode Select	
Equipment description	Crew rank, use, and comments
Off-on and mode select 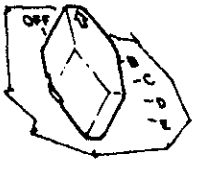	Order of preference—Not statistically significant (mean score, 6.29) Use—Tape recorder, STS panels. Crew comments—Set screw got loose; then hard to tell position.
Separate on-off and function select	Order of preference—Not statistically significant (mean score, 5.83) Use—TV monitor controls, ATM panel. Crew comments—Poor when there is no display to tell which modes are working.

MSIS-254

Reference: 1, page C-9 to C-21

Figure 9.3.4-1. Examples of Skylab Controls (Continued)

F. Multi-Mode Select	
Equipment description	Crew rank, use, and comments
Switch bank	Order of preference—1 (mean score, 7.17) Use—HV power (7) detector-HCO-5055A, ATM. Crew comments—None.
Combined toggle switch and position dial select 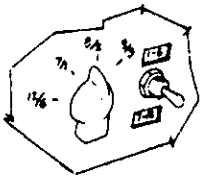	Order of preference—2 (mean score, 4.71) Use—ATM panel, MDA. Crew comments—Never learned to check toggle when using rotary dial. Confusing—should be used only when panel space is extremely important.

G. Discrete On-Off	
Equipment description	Crew rank, use, and comments
Two-position toggle	Order of preference—Not statistically significant (mean score, 6.43) Use—Blower/separator waste processor, lower workshop. Crew comments—None.
Push-on, push-off button	Order of preference—Not statistically significant (mean score, 6.45) Use—ATM panel, MDA. Crew comments—None.
Discrete buttons	Order of preference—Not statistically significant (mean score, 6.29) Use—Human vestibular function, lower workshop. Crew comments—None.
Momentary toggle 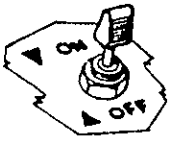	Order of preference—Not statistically significant (mean score, 5.29) Use—Tape recorders. Crew comments—Needs a status indicator.

H. Hand Controller	
Equipment description	Crew rank, use, and comments
Continuous output	Order of preference—1 (mean score, 7.57) Use—MPC-manual pointing controller, ATM C&D console. Crew comments—Need nonlinear control for fine adjustments.
Discrete output	Order of preference—2 (mean score, 6.71) Use—ATM-WLC alignment meter. Crew comments—None.

I. Counter Controls	
Equipment description	Crew rank, use, and comments
Pushbutton advance and retreat	Order of preference—1 (mean score, 7.00) Use—Solar radio noise burst monitor, MDA. Crew comments—None.
Toggle counter (event timer) 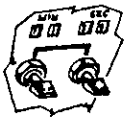	Order of preference—2 (mean score, 4.29) Use—ATM panel, MDA. Crew comments—Poor way to set a timer. Should have a toggle switch for each digit and increase-decrease capability.

J. Potentiometer Dials	
Equipment description	Crew rank, use, and comments
Thumbwheel	Order of preference—1 (mean score, 6.57) Use—Telescope monitors, ATM panel. Crew comments—None.
Rotating dial	Order of preference—2 (mean score, 6.29) Use—X-Ray image controls, ATM panel, MDA. Crew comments—None.

MSIS-254

Reference: 1, page C-9 to C-21

Figure 9.3.4-1. Examples of Skylab Controls (Continued)

K. Circuit Breakers	
Equipment description	Crew rank, use, and comments
Pull for open circuit	Order of preference—1 (mean score, 7.33) Use—ATM panel-console power, MDA. Crew comments—None.
Two-position toggle switch	Order of preference—2 (mean score, 5.29) Use—Circuit breaker panel, lower workshop. Crew comments—Does not indicate status as clearly as pop-up circuit breakers.

MSIS-254

Reference: 1, page C-9 to C-21

Figure 9.3.4-1. Examples of Skylab Controls (Concluded)

f. Acknowledgements - Provide feedback to the operator that the computer has recognized the input.

g. Prompting - Provide voice prompting from the computer in situations where there is an advantage to freeing the user from reading a display. Lack of a user response to the prompting shall result in a repetition of the prompt.

9.3.4 Examples Control Design Solutions

{A}

Examples of controls used on Skylab are provided in Figure 9.3.4-1. The Skylab crewmembers compared each control to others in the same functional category on a 10-point scale, with a 10 representing the best score. The Figure lists the controls within each functional category according to the crewmember's order of preference. For comparative purposes, the mean score on the 10-point scale determined by the crewmembers as a group is also indicated. Note that where the mean scores for two controls are close together, the significance or the order of preference is less meaningful. Also noted are where the control was used on Skylab, and pertinent crew comments on the control.

9.4 DISPLAYS

{A}

9.4.1 Introduction

{A}

This Displays section is divided into three parts: Visual Displays, Auditory Displays, and Caution and Warning Displays.

9.4.2 Visual Displays
{A}

9.4.2.1 Introduction
{A}

A visual display is a meter, digital indicator, signal light, flag indicator, video display terminal, or similar device that presents information visually to a crewmember. This section covers display readability, information presentation and display types.

(Refer to Paragraph 9.6.2.2, Data Display, and 9.6.3, Real-Time Interaction, for additional information on computer generated visual displays.)

(Refer to Paragraph 9.3.3.4, Computer Input Devices, for more information on the control of computer generated visual displays.)

(Refer to Paragraph 9.5, Labeling and Coding, for additional information on the requirements for labeling and coding.)

(Refer to Paragraph 8.13, Lighting, for related information.)

9.4.2.2 Visual Display Design Considerations
{A}

The principal factors affecting the readability of displays are:

display height/orientation relative to the operator's line of sight when directly in front of the display, display distance and orientation relative to the operator's straight ahead line of sight when the operator must read a display from an off-side position, and the size of the display markings relative to the distance at which the display must be read.

Factors that should be considered in the design of visual displays are provided below.

a. Mechanical Display Uses - Recommendations for the use of mechanical displays are provided in Figure 9.4.2.2-1.

(Refer to Paragraph 9.4.2.3.3, Display Types, for design requirements for a wide range of display types.)

b. Dim to OFF - Caution should be exercised in designing displays that can be dimmed to a level below which they cannot be differentiated from the OFF condition. When this failure to differentiate between ON/OFF conditions might lead to critical operator failures (i.e., failure to detect or perform a critical step in an operation), the "dim-to-off" capability should not be provided, or provided only if additional safeguards are implemented.

c. Visual Display Terminal (VDT) Enhancement:

1. Glare reduction:

a) Avoid bright light sources within 60 degrees of the center of the visual field. Since many visual displays are at or only somewhat below the horizontal position of the eye, placing light fixtures relatively high above the work area minimizes direct glare.

b) Use indirect lighting.

c) Use more relatively dim light sources rather than a few very bright ones.

d) Glare can be reduced by the use of optical coatings, filters, hoods, shields, recession, or adjustment of display surface angle. Adjustability, optical coatings, and in-place filters are, in general, preferable to other techniques.

Use	Scales		Counters	Printers	Flags
	Moving pointer	Fixed pointer			
Quantitative information	Fair May be difficult to read while pointer is in motion.	Fair May be difficult to read while scale is in motion.	Good Minimum time and error for exact numerical value; however, cannot be read when changing rapidly	Good Minimum time and error for exact numerical value. Provides reference records.	N/A
Qualitative information	Good Location of pointer easy. Numbers and scale need not be read. Position change easilty detected.	Poor Difficult to judge direction and magnitude of deviation without reading numbers and scale.	Poor Numbers must be read. Position changes not easily detected.	Poor Numbers must be read. Position changes not easilty detected.	Good Easily detected. Economical space.
Setting	Good Simple and direct relation of motion of pointer to motion of setting knob. Position change aids monitoring.	Fair Relation to motion of setting knob may be ambiguous. No pointer position change to aid monitoring. Not readable during *rapid setting.*	Good Most accurate monitoring of numerical setting. Relation to motion of setting knob less direct than for moving pointer. Not readable during *rapid setting*	N/A	N/A
Tracking	Good Pointer position readily controlled and monitored. Simplest relation *to manual* control motion.	Fair No position changes to aid monitoring. Relation to *control motion* somewhat ambiguous.	Poor. No gross position changes to aid monitoring	N/A	N/A
General	Requires largest exposed and illuminated area on panel. Scale length limited unless multiple pointers used.	Saves panel space. Only small section of scale need be exposed and illuminated. Use of tape allows long scale.	Most economical of space and illumination. Scale length limited only by number of counter drums.	Limited application.	Limited application.

Reference: 2, Page 35

MSIS-107

Figure 9.4.2.2-1. Application of Various Types of Mechanical Displays

2. Surround luminance - With the exception of emergency indicators, no close by light source should be brighter than the display characters (with positive contrast).

3. Viewing distance - The optimal viewing distance for VDT displays depends on numerous factors including screen resolution, character size, luminance, contrast ratio, and the type of task. A general viewing distance of 510 mm (20 in) has been specified in the Requirements section (9.4.2.3.3.9g). However, workstation design should allow the observer to view the screen from as close as he or she may wish. When periods of screen observation are short, or when dim signals must be detected, the viewing distance may be reduced to 250 mm (10 in). Displays that must be placed at viewing distances greater than 510 mm (20 in) due to other considerations should be appropriately modified in aspects such as display size, symbol size, brightness ranges, line-pair spacing, and resolution.

4. Font - If a specific font is used, the Lincoln Mitre (L/M) font is recommended because its characters are highly identifiable, resulting in faster identification and few errors.

(Refer to Paragraph 9.4.2.3.3.9i, VDT Alphanumerics, for additional information.)

5. Character size - The optimum size of letters and numerals on VDT displays is a function of viewing distance, contrast, and whether the letters and numerals move or are in fixed positions.

(Refer to Paragraph 9.4.2.3.3.9i, VDT Alphanumerics, for additional information.)

6. Mathematical tables - When strings of numerals are being used and have no logical order, they should be arranged in groups of three or four and at least one pica space should be used between columns. A rule (line) is not necessary between the columns.

9.4.2.3 Visual Display Design Requirements

{A}

9.4.2.3.1 Display Readability Design Requirements

{A}

9.4.2.3.1.1 Illumination Design Requirements

{A}

Workstation lighting requirements are provided below.

a. Luminance Control:

1. When a display will be used under varied ambient illumination, a dimming control shall be provided. The range of the control shall permit the displays to be legible under all expected ambient illumination levels.

2. Dimming to full OFF shall require a positive indication.

(Refer to Paragraph 9.4.2.2b, Dim to OFF, for additional design considerations.)

b. Dark Adaptation :

1. Partial Dark Adaptation - When the degree of dark adaptation required is not maximum, low brightness white light (preferably integral), that is adjustable as appropriate, shall be used.

2. Complete Dark Adaptation - When complete dark adaptation is required, low luminance (0.07-0.34 cd/m^2) red light (greater than 620 nm) shall be provided for better visibility.

c. Light Distribution:

1. Where multiple displays are grouped together, lighting shall be balanced across the instrument panel such that the mean indicator luminances of any two instruments shall not differ by more than 33% across the range of full ON to full OFF.

2. Light distribution shall be sufficiently uniform within an integrally illuminated instrument such that the ratio of standard deviation of indicator element luminances to mean indicator luminance shall not be more than 0.25, using eight or more equally spaced test measurements.

d. False Indication or Obscuration - Provision shall be made to prevent direct or reflected light from making indicators appear illuminated when they are not, or to appear extinguished when they are illuminated.

9.4.2.3.1.2 Display Contrast Design Requirements

{A}

Requirements for contrast within an indicator are provided below.

(Refer to Paragraph 9.4.2.3.3.9c, Contrast, for information on VDT contrast requirements.)

a. Indicator Contrast - The luminance contrast within the indicator shall be at least 50%. However, this 50% contrast requirement does not apply to special displays specifically designed for legibility in sunlight.

b. Low Ambient Illumination - For low ambient illumination applications, contrast shall be at least 90%, with the background luminance less than the figure luminance.

9.4.2.3.1.3 Reflections Design Requirements

{A}

Design requirements pertaining to reflections are provided below.

a. Displays shall be constructed, arranged, and mounted to prevent reduction of information transfer due to the reflection of ambient illumination from the display cover.

b. Reflections in viewing surfaces (e.g., view ports, windshields, etc.) shall be avoided.

c. Anti-reflection techniques (such as shields and filters) shall not be used if they noticeably degrade display quality.

(Refer to Paragraph 8.11, Windows Integration, for related information.)

9.4.2.3.1.4 Vibration Design Requirements

{A}

Display design shall be such that vibration of the display and/or the observer shall not degrade display readability below the level required for mission accomplishment.

(Refer to Paragraph 5.5, Vibration Design Requirements, for specific requirements.)

9.4.2.3.1.5 Display Size Design Requirements

{A}

As a minimum, displays shall be of sufficient size to provide readily usable data to the user. This requirement shall hold for all reasonably anticipated locations of the user's relative to the display.

9.4.2.3.2 Information Presentation Design Requirements

{A}

Requirements for the presentation of information in visual displays are given below.

a. Content - The information displayed to an operator shall be prioritized such that the

information which is necessary to perform specific actions or to make decisions is easiest to acquire.

b. Equipment Response - Signal devices, including pushbutton signal lights, shall display equipment response and not merely control position.

c. Signal Absence:

1. The absence or extinguishment of a signal or visual indication shall not be used to indicate a "ready" or "in tolerance condition, unless the status of the caution light filament and its associated circuitry can be easily tested by the operator and operator perception of such events is not time critical. Display devices shall have a positive indication of on or ready.

2. The absence or extinguishment of a signal or visual indicator shall not be used to denote a condition; however, the absence of a signal or visual indication shall be acceptable to indicate a "power off" condition for operational displays only - not for maintenance displays.

d. Range and Accuracy - Display range and readout accuracy shall be consistent with the needs of the crewmembers to manage the spacecraft or equipment, but shall not exceed the accuracy of the input signal.

e. Duration - Non-dynamic signals and display information shall remain displayed until a direct user input cancels them. Dynamic signals and display information shall have durations of sufficient length to be reliably recognized under the highest expected operator workload and all anticipated operational environments.

f. Timeliness Displays (such as CRTs, head-up displays, etc.) requiring refreshed information shall be updated in a synchronous manner, where possible, and be refreshed to the degree of timeliness required by personnel in the normal operating or servicing mode.

g. Display Failure Clarity:

1. Displays shall be designed so that failure of the display or display circuitry shall be immediately apparent to the crew.

2. Where "automatic switch-over" to redundant power or signal sources (due to failure) is implemented, the automatic switch-over shall be made immediately obvious to the crew.

h. Display Functionality - Displays shall provide a positive and unambiguous indication of system state (e.g. indicating "power on" or "ready" as indicated by a blinking cursor.) These positive indications shall be used consistently throughout the space module.

9.4.2.3.3 Display Types

{A}

a. System/equipment status - shall be inferred by the illumination of the indicator, not by the absence of illumination.

b. Indicator Labeling - shall be provided, close to the indicator, imparting the message intended by the light's illumination.

c. Indicator Color - The color of the light shall be clearly identifiable and meets with established color standards.

9.4.2.3.3.1 Maintenance Display Design Requirements

{A}

Maintenance displays shall be located so they do not interfere with normal flight displays. When possible, they shall not be visible when not in use.

9.4.2.3.3.2 Large Screen Display Design Requirements

{A}

Requirements for the design of large screen displays are provided below.

a. Large Screen Optical Projection Displays - Rear projection shall be used where physical obstructions to front projection result in poor visibility or where work areas require high ambient illumination for other activities.

b. Seating Area - The viewing distance/display size relationship and off-centerline viewing of optical projection displays for group viewing shall conform to the preferred limits of Figure 9.4.2.3.3.2-1 and shall not exceed the acceptable limits indicated.

c. Image Luminance and Light Distribution - Image luminance and light distribution shall conform to the preferred limits and shall not exceed the acceptable limits of Figure 9.4.2.3.3.2-1. In any case, the luminance of the screen center at maximum viewing angle shall be at least half its maximum luminance when viewed straight on.

d. Projected Alphanumeric Design:

1. A block sans serif type of numerals and letters shall be used.

2. Capital letters shall be used, rather than lower case, except for extended copy or lengthy messages.

3. Stroke width shall be 1/6 to 1/8 of numeral or letter height, but may be narrower for light markings on a dark background.

4. Stroke width shall be the same for all letters and numerals of equal height.

5. Letter and numeral widths and character and word spacing shall conform to Paragraph 9.5.3.1.14, Alphanumeric Design Requirements.

Factor	Optimum	Preferred limits	Acceptable limits
Ratio of $\frac{\text{viewing distance}}{\text{screen diagonal}}$	4	3-6	2-8
Angle off centerline	0 deg	20 deg	30 deg
* Image luminence (no film in operating projector)	35 cd/m^2 (10 ft-L)	27-48 cd/m^2 (8-14 ft-L)	17-70 cd/m^2 (5-20 ft-L)
Luminance variation across screen (ratio of maximum to minimum luminance)	1	1.5	3.0
Luminance variation as a function of viewing location (ratio of maximum to minimum luminance)	1	2.0	4.0
Ratio of $\frac{\text{ambient light}}{\text{brightest part of image}}$	0	0.002-0.01	0.1 max **

Reference: 2, Page 46

* For still projections higher values may be used
** For presentations not involving gray scale or color (e.g., line drawing, tables) 0.2 may be used.

Figure 9.4.2.3.3.2-1. Group Viewing of Optical Projection Displays

MSIS-108

6. The height of letters and numerals shall be greater than 15 minutes of visual angle and, in no instance, shall be less than 10 minutes of arc as measured from the longest anticipated viewing distance.

e. Luminance Ratio:

1. The luminance ratio for optically projected displays shall be at least 200:1.

2. The minimum luminance ratio for viewing charts, printed text, and other line work via slides or opaque projectors shall be at least 5:1.

3. For projections which are limited in shadows and detail, such as animation and photographs with limited luminance range, the minimum luminance ratio shall be at least 25:1.

4. For images which show a full range of colors (or grays in black-and-white

photographs), the minimum luminance ratio shall be at least 100:1.

5. Direction of Contrast:

a) For subtractive superposition (at the source), data shall be presented as dark markings on a transparent background.

b) For additive superposition (at the screen), data shall be presented as light markings on an opaque background. Colored markings against colored backgrounds of comparable brightness shall be avoided.

f. Keystone Effects - Projector-screen arrangement shall minimize the "Keystone effect"

(i.e., the distortion of projected data proportions due to non-perpendicularity between projector and screen).

9.4.2.3.3.3 Legend Light Design Requirements

{A}

Requirements for legend lights are provided below.

a. Use - Legend lights shall be used in preference to simple indicator lights except where design constraints demand that simple indicators be used.

b. ON/OFF Legibility - When not energized, legends shall be legible but shall not appear to be energized (e.g., due to direct sunlight).

c. Information Presentation - A maximum of three lines of information shall be presented on the display face of a legend light.

d. Light/Switch Determination - It shall be easy to distinguish between legend lights and legend switches throughout the space module.

e. Status Indication - Positive system/equipment status shall be inferred by the illumination of the indicator, and not by the absence of illumination.

9.4.2.3.3.4 Scales and Pointers Design Requirements

{A}

Requirements for the design of scales and pointers are provided below.

a. Moving Pointer Circular Scales - Clockwise movement of a rotary control or movement of a linear control forward, up, or to the right shall produce a clockwise movement of circular scale pointers and an increase in the magnitude of the setting.

b. Moving Pointer Linear Scales - Clockwise movement of a rotary control or movement of a linear control forward, up, or to the right shall produce a movement up or to the right of the pointer of vertical and horizontal scales and an increase in the magnitude of the reading.

c. Fixed Pointer Moving Scale - Displays with moving scales and fixed pointers or cursors shall be avoided. When circular fixed-pointer, moving-scale indicators are necessary, clockwise movement of a rotary control or movement of a linear control forward, up, or to the right shall normally produce a counterclockwise movement of the scale and an increase in the magnitude of the reading.

d. Fixed Pointer Linear Scale - When use of vertical or horizontal fixed pointer, moving-scale indicators is necessary, clockwise movement of an associated rotary control or movement of a linear control forward, up, or to the right shall normally produce a movement of the scale down or to the left and an increase in the magnitude of the reading.

e. Pointers:

1. Length - The control or display pointer shall extend to, but not overlap, the shortest scale graduation marks.

2. Tip configuration - The pointer tip shall be tapered at a 20° angle (40° included angle), terminating in a flat tip equal in width to the minor scale graduations.

3. Mounting - The pointer shall be mounted as close as possible to the face of the dial to minimize parallax (see Figure 9.4.2.3.3.4-1).

4. Color - Pointer color from the tip to the center of the dial shall be the same as the color of the marks. The tail of the pointer shall be the same color as the dial face unless the tail is used as an indicator itself or unless the pointer is used for horizontal alignment.

f. Pattern/Color Coding - When certain operating conditions always fall within a given range on the scale, these areas shall be made readily identifiable by means of pattern or color coding applied to the face of the instrument.

g. Orientation - Alphanumerics on stationary scales shall be oriented in the local vertical position.

h. Zero Position and Direction of Movement - When positive and negative values are displayed around a zero or a null position, the zero or null point shall be located at either the 12 or 9 o' clock position. The magnitude of positive values shall increase with clockwise movement of the pointer, and the magnitude of negative values shall increase with counterclockwise movement. When pointer movement is more than 360, the zero or reference point shall be located at the 12 o' clock position.

i. Scale Break - There shall be an obvious break of at least 10 degrees of arc between the two ends of the scale, except on multi-revolution instruments such as clocks.

j. Number of Pointers - Whenever precise readings are required, not more than two coaxial pointers shall be mounted on one indicator face.

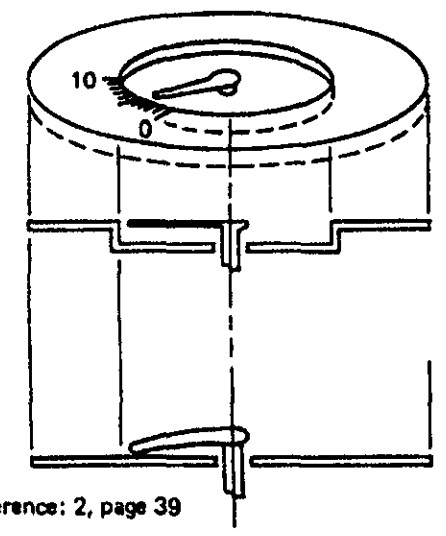

Reference: 2, page 39

MSIS-108

Figure 9.4.2.3.3.4-1. Scale and Dial Positioning to Minimize Parallax

k. Pointer Alignment - When a stable value exists for given operating conditions in a group of circular-scale indicators, the indicators shall be arranged either in rows so that all pointers line up horizontally on the 9 o' clock position under normal operating conditions or in columns so that all pointers line up vertically in the 12 o' clock position under normal operating conditions. If a matrix of indicators is needed, preference shall be given to the 9 o' clock position.

l. Relative Position of Scale Marks and Number - When reading time and accuracy are critical, circular scale markings and the location of associated numbers shall be arranged to prevent pointers from covering any portion of the scale marks or numerals. The pointer shall come to within 0.8-1.6 mm (0.03-0.06 in.) of all scale markings (See Figure 9.4.2.3.3.4-2).

m. Placement of Pointers - Pointers shall be located to the right of vertical scales and at the bottom of horizontal scales.

n. Placement of Numerals - Numerals shall be placed on the side of the graduation marks away from the pointer to avoid having numbers covered by the pointer. If space is limited (for curved or arc scales) numerals may be placed inside of graduation marks to avoid undue constriction of the scale.

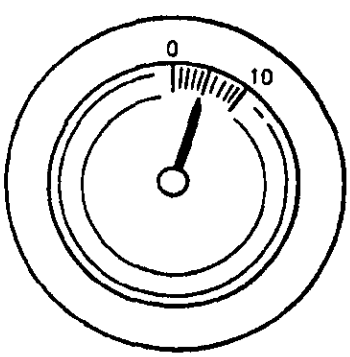

MSIS-110

Reference: 2, page 39

Figure 9.4.2.3.3.4-2. Relationship Between Pointer and Scale Marks to Maximize Reading Accuracy

o. Setting - If the display will be used for setting a value (e.g., tuning in a desired frequency), the unused portion of the dial face shall be covered, and the open window shall be large enough to permit at least one numbered graduation to appear at each side of any setting.

9.4.2.3.3.5 Clock and Timer Design Requirements

{A}

Requirements for the design of clocks and timers are provided below.

a. Digital Clocks and Timers - Time measurement indicators shall be of the digital readout type. Where applications require the display of qualitative information (e.g., relative approximate time) other types of indicators (e.g., analog clocks and/or clocks of lesser accuracies) may be used, subject to the approval of the procuring activity.

b. Format - Time measurement indicators shall indicate time or time intervals in seconds (00 to 59), minutes (00 to 59), and hours (00 to 23). Values extending beyond 24 hours shall be displayed in terms of days unless otherwise specified. Greater or lesser resolution will be provided as required.

c. Accuracy - Accuracy shall meet the requirements of the task.

d. Control Modes - Unless otherwise specified, the manual control modes listed below shall be provided for each time measurement indicator.

1. Start - Upon activation of the start control line, the indicator shall begin to count within 100 milliseconds.

2. Stop - Upon activation of the stop control line, the indicator shall stop within 100 milliseconds.

3. Reset - Upon activation of the reset control line, the indicator shall reset to zero within 500 milliseconds.

4. Slew/Set:

a) Individual digit slew control shall be provided.

b) A manually set indicator shall slew in an upward direction (from the lowest reading to the highest reading) at the rate of 2 digits per second. A downward slewing mode is not required.

c) For applications where a "direct set" mode is provided in lieu of a timer shall display the commanded reading within 500 milliseconds after the activation of the "enter" or "proceed" command.

d) Upon activation of the count up command and start command, the indicator will count up and continue counting up through zero upon reaching maximum count (e.g., 59:58, 59:59, 00:00, 00:01, 00:02).

e) Upon activation of the countdown command and start command, timers shall countdown to zero and upon reaching zero shall begin to count up (e.g., 00:02, 00:01, 00:00, 00:01, 00:02). This control mode shall be implemented for event timers. The mode shall not be provided for clocks unless specifically requested.

f) There shall be no possibility of ambiguity as to whether a timer is counting toward its target time, or has passed the target time and is counting away from it, if this ambiguity could negatively affect system performance. For example, an overtime light can be used.

9.4.2.3.3.6 Flag Display Design Requirements

{A}

Requirements for the design of flag displays are provided below.

a. Use - Flags shall be used to display qualitative, non-emergency conditions.

b. Location and Mounting - Flag indicators shall be located above the associated control switch, within meter windows, or with associated items as applicable. Panel flags shall be mounted as close to the surface of the panel as possible without obscuring necessary information.

c. Snap Action - Flags shall operate by snap action.

d. Contrast - A minimum of 75% luminance contrast shall be provided between flags and their backgrounds under all expected lighting conditions.

e. Malfunction Indication - When flags are used to indicate the malfunction of a visual display, the malfunction position of the flag shall obscure part of the operator's view of the malfunctioning display and shall be readily apparent to the operator under all expected levels of illumination.

f. Positions - Flag indicators shall be restricted to three positions, with preference being given to the two-position type.

g. Information Content - Each flag indicator shall indicate a single, immediately identifiable event (e.g., the completed opening of a valve).

h. Legend - Alphanumeric legends shall be used in lieu of, or in addition to, color coding whenever possible. When a legend is provided on the flag, the lettering shall appear upright when the flag assumes the active or no-go position.

i. Gray Flag - A gray colored (blank position) mechanical "talk back" flag shall mean that a particular system element is in an operational mode or is not inhibited from operation.

j. Barber Pole Flags - A barber pole (striped) flag shall mean that a particular system element is indeterminate, inactive, or inhibited from operation.

k. Red Flag - a red flag shall mean that a particular system element has failed.

l. Test Provision - A convenient means shall be provided for testing the operation of flags.

9.4.2.3.3.7 Digital Display Design Requirements

{A}

Requirements for the design of digital displays are provided below.

a. Mounting - Counters shall be mounted as close as possible to the panel surface so as to minimize parallax and shadows and maximize the viewing angle.

b. Spacing Between Numerals - The horizontal separation between numerals shall be between one quarter and one half the numeral width. Numbers having more than five digits shall have groups of three digits separated by either blank space equivalent to one-half the width of one character or by commas. Grouping shall start from the right.

c. Movement:

1. Snap action - Numbers shall change by snap action in preference to continuous movement.

2. Update rate - The update rate shall not be faster than two per second.

3. Reset - The rotation of a counter reset knob shall be clockwise to increase the counter indication or to reset the counter.

4. Slew rate - Manual slewing modes, when provided, shall be capable of slewing individual digits at a normal rate of two characters per second. A separate control shall be provided for each individual digit (e.g., "units" digit, "tens" digit, etc.), unless otherwise specified.

d. Illumination - Digital displays shall be self-illuminated when used in areas in which ambient illumination will provide display luminance below 3.5 cd/m^2 (1 ft-L).

e. Individual characters shall normally be limited to the numbers 0 through 9, the capital letters of the English alphabet (A through Z), the plus (+) and minus (-) signs, and the decimal point.

f. Accuracy - Digital indicators shall possess an internal accuracy equal to or better than the least significant digit displayed by the indicator.

g. Analog Inputs - When analog-to-digital conversion is required to display an analog signal in digital form, the displayed digit(s) shall reflect the analog signal rounded off to the nearest whole number of the least significant digit displayed (Note: 0.5 shall be rounded up).

9.4.2.3.3.8 Light Emitting Diode (LED) Design Requirements

{A}

Requirements for the design of light emitting diodes are presented below.

a. To the extent applicable, the standards for LED's shall be the same as the requirements for transilluminated displays in Paragraph 9.5.3.2 i of this standard.

b. Intensity Control - LEDs shall be capable of being dimmed.

c. Color Coding - Use of LED color coding shall conform to Paragraph 9.5.3.2i, herein.

d. Lamp Testing - LED indicator lights with less than 100,000 hours mean time between failure (MTBF) shall require a lamp testing capability.

9.4.2.3.3.9 Visual Display Terminal (VDT) Design Requirements

{A}

Requirements for the design of visual display terminal (VDT) displays are presented below.

a. Resolution - All displays shall have a minimum resolution of 67 lines per inch.

b. Luminance - The minimum level of luminance recommended for characters on a VDT, regardless of wavelength, shall be 70 cd/m^2 (20 fL) with a level of 170 cd/m^2 (50 fL) preferred.

c. Contrast:

1. Controls - VDTs shall be equipped with controls that permit the crew to optimize VDT discriminability under all anticipated environmental and systems operating conditions. Adjustment of brightness, contrast, and other electronic parameters shall permit the detection of the weakest target that is simulated.

2. Tolerance - Pixel to Pixel non-uniformity shall be less than or equal to 2 percent.

3. Manual control - Under normal operating conditions, a manual VDT brightness control shall be provided allowing selection of contrast between the lowest intensity symbology and its background of from 1:1 to at least 16:1.

4. High ambient - As the highest ambient light level is reached, the contrast ratio between the lowest intensity symbology and the background shall degrade to not less than 2:1 (unless a lower contrast has been manually selected).

5. Automatic control - Where critical images (those necessary for crew safety and mission success) are exposed to rapid or frequent changes in ambient light levels, the contrast ratio shall be automatically maintained at a level selected by the operator.

6. Recommended contrast - The maximum contrast shall be 90%, the minimum shall be 88%. This narrow range applies specifically to alphanumeric displays with contrast defined as given below.

$$\%C = [((Lc+Lr)-(Ld+Lr)) / (Lc+Ld+2Lr)] \times 100$$

C = contrasts

Lc = character luminance

Ld = background luminance

Lr = reflected luminance

d. Glare - Glare from a VDT screen shall be controlled for viewing from any angle within 30° of the axis normal to the screen.

(Refer to Paragraph 9.4.2.2c, VDT Enhancement, for recommendations on glare control.)

e. Surround:

1. The luminance range of surfaces immediately adjacent to the display shall be between 10% and 100% of screen background luminance.

2. Surfaces adjacent to the display shall have a dull matte finish.

f. Flicker - the refresh rate for VDTs shall not be less than 55 Hz. For alphanumerics presented in negative contrast (dark characters on light background) the refresh rate shall be at least 100 Hz.

g. Viewing Distance and Angle:

1. A nominal viewing distance of 510 mm (20 in.) for VDT use shall be provided.

(Refer to Paragraph 9.4.2.2c, VDT Enhancement, for additional information on recommended viewing distances for VDT displays.)

2. Viewing Angle - All areas of the display surface shall be legible from within at least 30 degrees of the axis centered on, and normal to, the screen.

h. Installation - The face of VDT displays shall be flush with the surface of the panel in which it is installed.

i. VDT Alphanumerics:

(Refer to Paragraph 9.5.3.1.14, Alphanumeric Design, for Labeling and Coding Requirements.)

1. Character definition - The smallest definition for a dot matrix shall be 5 by 7 dots, with 7 by 9 preferred. If system requirements call for symbol rotation, a minimum of 8 by 11 is required, with 15 by 21 preferred.

2. Character font:

a) Unless precluded by other requirements, a standard font shall be used across an entire system.

b) The font shall include lower case characters and allow for descenders.

c) Superscripts and subscripts shall be provided.

3. Character size:

a) Character height:

1) For extended text, character height shall subtend a minimum of 15 minutes of arc for low definition characters (5x7). The maximum height shall be 22 minutes of arc unless a task analysis indicates need for a greater height in any specific application.

2) Flight display characters (not extended text) shall not subtend less than 24 minutes of visual angle to ensure adequate legibility under launch/entry conditions.

b) Character width - Character width shall be approximately 75% of character height.

c) Stroke width - Stroke width shall be 1/6 to 1/8 of character height.

4. Alphanumeric spacing:

a) Vertical spacing (line spacing) - Vertical spacing between lines shall be great enough so that immediately adjacent ascenders and descenders are separated by at least one blank pixel.

b) Horizontal spacing:

1) Between words - In printed text, normal spacing between words on a line shall be one character width.

2) Between characters - Minimum spacing between successive characters on a line shall be one pixel or 20% of character width (whichever is greater).

c. Descender Length - Descenders shall descend below the line by a distance of 10% to 15% of the upper case letter size.

5. Case - Extended text shall be in uppercase and lowercase letters. Words consisting of uppercase letters shall be used only to attract the operator's attention (e.g., for a label or title).

j. Target Size - When rapid identification is required (e.g., a target of complex shape is to be distinguished from a non-target shape that is also complex), the target signal shall subtend no less than 20 minutes of visual angle at the intended viewing distance. (The term "target" is used to mean any object, symbol, pattern, or marking that an operator must see.)

k. Display Face Facsimiles - Images of scale indicators, digital indicators, signal devices, and other display faces synthesized on VDT screens shall conform to the general requirements previously listed for specific types of displays.

l. Color - The VDT shall possess the capability to display at least four colors (in addition to black and white) for alphanumeric and two-dimensional displays. For three-dimensional graphics displays , a minimum of nine colors shall be used. If more than one VDT is to be used within a workstation, a color VDT may be used in conjunction with a monochrome VDT.

m. Pixel Addressability - The VDT shall be pixel addressable so that bit-mapped graphics can be presented on the display.

n. Graphics and Symbol Generation - The VDT shall provide graphics and symbol generation capability.

o. Display Overlays - The VDT shall provide the capability to display video with text and graphic overlays.

p. Highlighting - VDT, as a minimum, shall provide the following highlighting techniques: bold (high intensity) characters, reverse polarity, blinking.

q. Windowing - The VDT shall provide windowing capability.

9.4.2.3.3.10 Hardcopy Display Design Requirements

{A}

Requirements for the design of hardcopy displays are presented below.

a. Printers:

1. The printer shall print copy at a rate of at least 400 words per minute if the user is interacting with the computer through the printer.

2. Printer delay shall be no more than 1 to 2 seconds to acknowledge a command if the user is interfacing with the computer through the printer.

3. Printer noise level shall not exceed the NC 50 contour. If it does, the printer shall be in an enclosed area away from other personnel.

(Refer to Paragraph 5.4.3.2.3.1, Wide-Band, Long-Term Annoyance Noise Exposure Requirements, for specific requirements.)

4. Paper advance control or print head advance shall be provided to permit the operator to read the most recently printed line.

5. A provision shall be made for taking up paper.

6. The capability to remove printed material rapidly and neatly shall be provided.

7. There shall be an indicator of the remaining paper supply.

8. Reloading paper or replacing ribbon shall be accomplished without disassembly or using special tools.

9. Paper retainers shall be provided to reduce paper vibration.

10. Guides shall be provided to facilitate accurate positioning of the paper.

11. Where applicable, printers shall be designed to accept a variety of paper sizes.

12. The printer shall have graphics capability unless otherwise specified.

13. Where applicable, printers shall have draft mode (high speed) and high print quality mode (lower speed).

14. A print malfunction alarm shall be provided to alert the user when requested printing is not being done due to some malfunction.

15. Matte finish paper shall be used to avoid smudged copy and glare.

16. Hard copy print shall be black characters on a white background unless otherwise specified.

b. Plotters and Recorders:

1. Use - Plotters and recorders shall be used when a visual record of continuous graphic data is necessary or desirable.

2. Visibility - Critical graphics (those points, curves, and grids that must be observed when the recording is being made) shall not be obscured by pen assembly, arm, or other hardware elements.

3. Contrast - A minimum of 50% luminance contrast shall be provided between the plotted function and the background on which it is drawn.

4. Take-up device - A take-up device for extruded plotting materials shall be provided.

5. Job aids - Graphic overlays shall be provided where these may be critical to proper interpretation of graphic data as it is being generated. Such aids shall not obscure or distort the data.

6. Smudging/smearing - The plot shall be resistant to smudging or smearing under operational use.

9.4.2.3.4 Display Maintenance Design Requirements

{A}

a. Lamp Redundancy - Incandescent display lighting shall incorporate filament redundancy or dual lamps. When one filament or bulb fails, the intensity of the light shall decrease sufficiently to indicate the need for lamp replacement, but not so much as to degrade operator performance.

b. Lamp Testing - When indicator lights using incandescent bulbs are installed on a control panel, it shall be possible to test all control panel lights at one time. When applicable, design shall allow testing of all control panels at one time. Panels containing three or fewer lights may be designed for individual press-to-test bulb testing.

c. Lamp Replacement - Where possible, lamps shall be removable and replaceable from the front of the display panel. The procedure for lamp removal and replacement shall not require the use of tools and shall be easily and rapidly accomplished.

d. Lamp Removal Safety - Display circuit design shall permit lamp removal and replacement while power is applied without causing failure of indicator circuit components or imposing personnel safety hazards.

9.4.3 Audio Displays
{A}

9.4.3.1 Introduction
{A}

This section covers the design of audio displays. Topics covered include: speech and signal generation, voice output equipment, operator comfort and convenience as it relates to audio displays, and operating controls for voice communication equipment.

9.4.3.2 Audio Displays Design Considerations
{A}

Factors that should be considered in the design of audio displays are presented below.

a. Signal Type - When an audio presentation is required, the optimum type of signal should be presented in accordance with Figure 9.4.3.2-1.

b. Use With Several Visual Displays - One audio signal may be used in conjunction with several visual displays, provided that immediate discrimination is not critical to personnel safety or system performance.

c. Binaural Headsets - Binaural headsets should not be used in any operational environment below 85 dB(A) when that environment may contain sounds that provide the operator with useful information when that information cannot be directed to the crewmember's headset. Such sounds may include voices, machine noise that indicates wear or malfunction, and other auditory indications of system performance/mission status.

d. Speech Intelligibility:

1. General - When information concerning the speech intelligibility of a system is required, three measurement methods are available, with the appropriate selection being dependent upon the requirements of the test:

a) The ANSI standard method of measurement of phonetically balanced (PB) monosyllabic word intelligibility, (ANSI S3.2-1960), should be used when a high degree of test sensitivity and accuracy is required.

b) The modified rhyme test (MRT) (see Ref. 157) should be used if the test requirements are not as stringent, or if time and training do not permit the use of the ANSI method.

c) The articulation index (AI) calculations should be used for estimations, comparisons, and predictions of system intelligibility based on ANSI S3.5-1969.

(Refer to Paragraph 5.4.3.2.2.2, Indirect Voice Communications Noise Exposure Requirements, for additional information.)

2. Criteria - The intelligibility criteria shown in Figure 9.4.3.2-2 shall be used for voice communication. The efficiency of communications needed and the type of material to be transmitted shall determine which of the three communication requirements of Figure 9.4.3.2-2 is to be selected.

e. Speech Generation - Speech generation (from tape or digital source) should be used when other audio signals are less appropriate and in accordance with the following guidelines:

1. Information to be processed is short, simple, and transitory.

2. Message requires an immediate or time-based response.

Function	Type of signal		
	Tones (periodic)	Complex sounds (non-periodic)	Speech
Quantitative indication	Poor Maximum of 5 to 6 tones absolutely recognizable.	Poor Interpolation between signals inaccurate.	Good Minimum time and error in obtaining exact value in terms compatible with response.
Qualitative indication	Poor-to-fair Difficult to judge approximate value and direction of deviation from null setting unless presented in close temporal sequence.	Poor Difficult to judge approximate deviation from desired value.	Good Information concerning discplacement, direction, and rate presented in form compatible with required response.
Status indication	Good Start and stop timing. Continuous information where rate of change of input is low.	Good Especially suitable for irregularly occurring signals (e.g., alarm signals).	Poor Inefficient; more easily masked; problem of repeatability.
Tracking	Fair Null position easily monitored; problem of signal-response compatibility.	Poor Required qualitative indications difficult to provide.	Good Meaning intrinisic in signal.
General	Good for automatic communication of limited information. Meaning must be learned. Easily generated.	Some sounds available with common meaning (e.g., fire bell). Easily generated.	Most effective for rapid (but not automatic) communication of complex, multidimensional information. Meaning intrinsic in signal and context when standardized. Minimum of new learning required.

Reference: 2, page 52

MSIS-111

Figured 9.4.3.2-1. Functional Evaluation of Audio Signals

Intelligibility Criteria	Score (see notes for definition)		
	PB	MRT	AI
Exceptionally high intelligibility; separate syllables understood	90%	97%	0.7
Normally acceptable intelligibility; about 98% of sentences correctly heard; single digits understood	75%	91%	0.5
Minimally acceptable intelligibility; limited standardized phrases understood; about 90% sentences correctly heard (not acceptable for operational situations	43%	75%	0.3

Reference: 2, Pg. 62

MSIS112 Rev. B

Notes:
PB - Phonetically Balanced
MRT - Modified Rhyme Test
AI - Articulation Index

Figure 9.4.3.2-2 Intelligibility Criteria Voice Communcations Systems

3. The common mode of visual display is restricted by overburdening; ambient light variability or limitation.

4. Crewmember must remain mobile.

5. Vision is degraded by vibration, high G-forces, hypoxia, or other environmental conditions.

6. Operator inattention is anticipated.

9.4.3.3 Audio Displays Design Requirements
{A}

9.4.3.3.1 General Design Requirements
{A}

General requirements for the design of audio displays are provided below.

a. False Alarms - The design of audio display devices and circuits shall preclude false alarms.

b. Failure - The audio display devices and circuits shall be designed to preclude warning signal failure related to system or equipment failure and vice versa. Positive and attention demanding indication shall be provided if failure occurs.

c. Circuit Test - All audio displays shall be equipped with circuit test devices or other means of operability testing.

d. Disable - An interlocked, manual disable shall be provided if there is any failure mode which can result in a sustained activation of an audio display.

9.4.3.3.2 Audio Input/Output Equipment Design Requirements

{A}

a. Frequency Response - Microphones/input devices, loudspeakers/output devices, and associated audio system devices shall be designed to respond optimally to that part of the speech/audio spectrum most essential to intelligibility (i.e. 200 to 6,100 Hz). Where system engineering necessitates speech transmission bandwidths narrower than 200 to 6,100 Hz, the minimum acceptable frequency range shall be 250 to 4,000 Hz. Amplitude variation across the frequency response bandwidth shall not be more than +/- 6 dB for the end to end, onboard distribution system, including speakers, earphones, and microphones.

b. Microphones/input devices:

1. Dynamic Range - The dynamic range of a microphone/input devices shall be great enough to admit variations in signal input of at least 50 dB.

2. Noise Canceling - Noise canceling microphone/input devices are required for high noise environments (85 dB (A) or above) and are preferred in all areas.

c. Loudspeaker/output devices :

1. Sidetone - The speaker's verbal input shall be in phase (not have a perceivable delay) with its reproduction as heard on the output device.

2. Audio equipment used to feed multiple channels into the same speaker or earphone shall comply with the frequency response characteristics as stated in Paragraph 9.4.3.3.2a.

3. Headsets - If listeners will be working in high ambient noise (85 dB(A) or above), binaural rather than monaural headsets shall be provided. Unless operational requirements dictate otherwise, binaural headsets shall be wired so that the sound reaches the two ears in opposing phases. Their attenuation qualities shall be capable of reducing the ambient noise level to less than 85 dB(A). Provisions shall be incorporated to furnish the same protection to those who wear glasses.

d. Use of Deemphasis - When transmission equipment employs pre-emphasis and peak-clipping is not used, reception equipment shall employ frequency Deemphasis of characteristics complementary to those of pre-emphasis only if it improves intelligibility (i.e., Deemphasis shall be a negative-slope frequency response not greater than 9 dB per octave over the frequency range 140 to 4,800 Hz).

e. Feed Back Noise - Positive feedback noise shall be controlled to the extent that normal voice communication is not adversely affected.

f. Earphone/Speaker To Microphone Feedback Isolation:

1. Sufficient electrical, mechanical, and acoustical isolation shall be provided to preclude feedback oscillations (squeal problems) or echo effects (no discernable unwanted voice echo to speaker).

2. Earphone/Speaker to microphone system loop gain shall be limited to less than 1.

9.4.3.3.3 Operator Comfort and Convenience Design Requirements

{A}

Requirements for operator comfort and convenience are provided below.

a. Comfort - Communication equipment to be worn by a crewmember (e.g., headphones) shall be designed to preclude operator discomfort. Metal parts of the headset shall not come in contact with the user's skin.

b. Hands-Free Operation - Operator microphones and headphones shall be designed to permit hands-free operation under normal working conditions.

9.4.3.3.4 Voice Communication Controls Design Requirements

{A}

Requirements for the design of operating controls for voice communication equipment are provided below.

a. Volume Controls

1. Accessible volume or gain controls shall be provided for each communication receiving channel (e.g., loudspeakers or headphones) with sufficient electrical power to drive sound pressure level to at least 110 dB overall when using two earphones.

2. Pressure operated gain control switches to compensate for volume attenuation in underpressurized areas shall be provided.

3. The minimum setting of the volume control shall be limited to an audible level (i.e., it shall not be possible to inadvertently disable the system with the volume control).

4. While separation of power (ON/OFF) and volume control adjustment functions into separate controls is preferred, if conditions justify their combination, a noticeable detent position shall be provided between the OFF position and the lower end of the continuous range of volume adjustment. When combined power and volume controls are used, the OFF position shall be labeled.

b. Squelch Control - Where Communication channels are to be continuously monitored, each channel shall be provided with a signal-activated switching device (squelch control) to suppress channel noise during no-signal periods. A manually operated, ON/OFF switch, to deactivate the squelch when receiving weak signals, shall be provided.

9.4.4 Caution and Warning Displays

{A}

9.4.4.1 Introduction

{A}

This section discusses caution and warning system (CWS) design. Different classes of CWS alarms are defined. After presenting general design requirements, specific requirements for visual and audio signals are given.

(Refer to Paragraph 9.5.3.1.13, Caution and Warning Labels and Paragraph 9.5.3.2i, Color Coding Design Requirements.)

9.4.4.2 Caution and Warning System Design Considerations

{A}

Factors that should be considered in the design of caution and warning systems (CWS) are presented below.

a. Purpose - CWSs are provided, as necessary, to warn personnel of impending danger, to alert an operator to a critical change in system or equipment status, to

remind the operator of a critical action or actions that must be taken, and to provide advisory and tutorial information.

b. Attention Shift - It can often take an individual a period of time to shift full attention from the task at hand to an alarm. Accordingly, caution and warning displays should contain two elements: (1) an alerting signal and (2) critical information concerning the event.

9.4.4.3 Caution and Warning System Design Requirements

{A}

The Caution and Warning system shall provide the onboard crew with aural and visual annunciation of the space module alarms. The Caution and Warning system shall be composed of a Primary function and an Emergency backup function.

The Primary function shall process and annunciate class 1, 2, and 3 alarms. The Emergency backup function shall be independent of the Primary function and shall be limited to the annunciation of class 1 alarms.

The Primary function Class 1 alarms shall adhere to all the definition and annunciation requirements listed in paragraph 9.4.4.3.1.1. Backup Emergency functions shall adhere to these same definition and annunciation requirements.

9.4.4.3.1 Alarm Classification Design Requirements

{A}

Three alarm classifications are presented below. These are:

a. Emergency (class 1 alarm).

b. Warning (class 2 alarm).

c. Caution (class 3 alarm).

9.4.4.3.1.1 Emergency Definition and Annunciation Requirements (Class 1 Alarms)

{A}

Requirements for the design of emergency displays are presented below.

a. Emergency definition - A life threatening condition which requires an immediate and preplanned safing action in order to protect the crew. The emergency conditions are identified below.

1. The presence of fire and/or smoke in a pressurized element.

2. A rapid change in O_2 and CO_2 partial pressure within a pressurized element.

3. The presence of toxic atmospheric conditions within a pressurized element.

b. Annunciation Requirements:

1. Each emergency condition shall trigger a visual signal and a unique aural tone. The visual display shall be coded as specified in paragraph 9.5.3.2. For the emergencies identified, those tones shall be:

a) Fire and/or smoke - A siren tone. This shall be a 50% duty cycle square wave which sweeps linearly from 666 Hz +/- 10% to 1470 Hz +/- 10% in 256 uniform steps for 2.5 seconds +/- 10%; similarly, back again to 666 Hz +/- 10% in 256 uniform steps for 2.5 seconds +/- 10%. This shall be operated until the signal is commanded to cease. Phase shall be continuous.

b) Rapid change in cabin pressure - A klaxon tone. This shall be constructed in a manner equivalent to the following: Two digital pulse trains shall be logically OR'ed and the DC component removed. The first pulse train shall be a 50% duty

cycle square wave at 2500 Hz /- 10%. The second pulse train shall be a 50% duty cycle wave at 256 Hz +/- 10% which is enable for 210 milliseconds +/- 10% and set to logic "0" for 70 milliseconds +/- 10%.

c) Toxic atmosphere - An alarm tone. This shall be a 2500 Hz +/- sine wave with an on/off cycle of 50 milliseconds +/- 10%, and 50 milliseconds +/- 10% off.

2. Emergency tones shall be heard in all areas that crewmembers occupy.

3. Tones shall wake sleeping crewmembers.

4. In all habitable areas, illuminated visual annunciation shall indicate presence of the specific emergency condition.

5. The capability shall be provided for tones to be shut off from at least one location within.

6. Corrective action information shall be displayed upon crew request.

7. Alarms shall have the ability to be manually activated.

8. For an emergency condition, visual display of specific information including condition location, shall be provided at all portable/integrated workstations attached to the data management network. If an emergency condition is detectable at the rack or functional unit level, indication of that specific location shall be provided at the workstation.

9. A method shall be provided to indicate when condition returns within limits.

10. Tones shall be shut off only by crew action.

11. Lights shall be extinguished only by crew action.

9.4.4.3.1.2 Warning Definition and Annunciation Requirements (Class 2 Alarms)

{A}

a. Warning Definition - A condition that potentially affects the safety of crew survival, and may require a predetermined action in order to contain the consequences. The warning conditions identified are:

1. Loss of a total system.

2. Loss of a Function category hardware or function.

3. Loss of insight into and/or control of a Function category or hardware function.

4. Accumulation of failures that jeopardize a category hardware function.

5. A Criticality Category failure except those conditions already identified as Emergency conditions in 9.4.4.3.1.1 a.

6. Exceeding a pre-defined redline/safety limit.

b. Annunciation Requirements:

1. A warning condition shall trigger a warning tone in all pressurized elements, and a warning light in the Nodes, Habs, and Labs (different form the Class 1 and 3 tones/lights). The tone shall be a 50% duty cycle square wave which alternates between 400 Hz +/- 10% and 1024 Hz +/- 10% for equal durations at 2.5 Hz +/- 10%. The visual display shall be coded as specified in Paragraph 9.5.3.2.

2. The warning tone shall be shut-off only by crew action.

3. The tone shall be adjustable to wake or not to wake sleeping crewmembers as desired.

4. For each warning condition, visual display shall be provided at all portable/integrated workstations attached to the data management network. If a warning condition is detectable at the rack or functional unit level, indication of that specific location shall be provided at the workstation.

5. A method shall be provided to indicate when condition returns within limits.

6. Corrective action information shall be displayed upon crew request.

7. The capability shall be provided for the tone to be shut off from at least one location within the Nodes, Habs and Labs.

8. The warning light shall be extinguished only by crew action.

9.4.4.3.1.3 Caution Display Design Requirements

{A}

Requirements for the design of caution displays are provided below.

a. Definition of Class 3 Alarm:

1. Conditions of a less time critical nature, but with the potential for further degradation if crew attention is not given. Example: heavier than normal consumable usage.

2. Messages that flag loss of redundant equipment such that a subsequent failure could result in a warning condition. Action is not necessarily required except that the effect of the loss in future activity planning must be considered. Example: loss of backup communication equipment.

b. Annunciation Requirements:

1. Caution displays shall trigger a general tone and light (different than class 2 tone/light) for a set time duration. This duration may be set differently for each caution condition.

2. Tone and light shall be extinguishable by crew action.

3. Data system message shall specify condition and corrective action at the discretion of the crew.

4. Tone shall be adjustable in sleeping quarters to wake or not to wake sleeping crewmembers as desired (but, see "4" below.)

5. At least one crewmember shall always be available to receive a caution signal.

6. A method shall be provided to determine if condition returns within limits.

7. A method shall be provided to identify momentary out of limits condition.

9.4.4.3.2 General Caution and Warning System Design Requirements

{A}

General requirements for caution and warning systems (CWS) are provided below.

a. CWS Recovery - The CWS shall be rapidly recoverable from a software system crash.

b. CWS Test Limits - Permanent limit or test conditions shall be stored redundantly in such a way that they are protected from system crashes and single operator errors involved with temporary limit changes.

c. System Failure - The system shall remain operable during and after major system failures (power, data, etc.).

d. Safe Haven CWS - The CWS shall be able to supply life support and rescue systems status to crewmembers using a "safe haven".

e. Flexibility - The CWS design shall provide for any anticipated expansion or reconfiguration of the space module or the

addition of new modules, payloads, or experiments.

f. Sensor Changeout - Critical CWS sensors shall be accessible for changeout when feasible.

g. System Status During Alarm - After an alarm is triggered, it shall be quickly determinable if the out-of-limit condition still exists and/or if a new out-of-limit condition occurs.

h. CWS Suppression - The CWS shall allow alarms, due to predefined activities or conditions, to be screened or suppressed.

i. Alarm Source - The source of an alarm due to any limit violation shall be easily determined (even if alarm condition is no longer present).

j. Time History - The history of all alarms shall be maintained and shall be easily retrievable, with the time of occurrence noted.

k. Alarm Classification - The approximate level of classification of an alarm shall be instantly apparent.

l. CWS Status - After real-time modifications are made to CWS software, exact status shall be easily determined.

m. CWS Baseline Limits - A return to the baseline (default) configuration of the CWS shall be easily enabled after a temporary modification or software "crash".

n. Multiple Alarms -

1. A single failure condition shall not cause a "waterfall" of related alarms. However, all out-of-limits conditions shall be retrievable by crewmembers.

2. Multiple caution and warning tones shall be annunciated simultaneously for multiple simultaneous unrelated caution and warning events.

o. Existing Signals - Established and recognized audio alarm signals shall be used, provided they are compatible with the acoustic environment and the requirements specified herein. Standard signals shall not be used to convey new meanings.

p. Priority - The CWS shall recognize the highest category of unacknowledged signal.

q. Disruptive Alarms:

1. All Class 1 through 3 alarms that would disrupt crew performance shall be capable of being easily downgraded to a redundant but non-disruptive alarm after its initial alerting function has been acknowledged. For example, an audio alarm might be downgraded to a non-disruptive visual signal that would be presented continuously until the alert condition no longer existed.

2. A disruptive alarm that requires manual shut-off shall not be used if the act of shutting it off would interfere with the corrective action required.

r. Alerting Function - CWS alarm signals shall have positive alerting characteristics under all operating conditions.

9.4.4.3.3 Visual Caution and Warning Display Design Requirements

{A}

Requirements for the design of visual caution and warning systems are presented below.

a. Master Alarm Light:

1. A master alarm light shall be provided in cases where caution, warning, or emergency lights have been located outside of the operator's 30 degree cone of vision.

2. Illumination of the master alarm light shall indicate that at least one or more caution, warning, or emergency lights have been energized.

3. The master alarm light and any applicable caution, warning, or emergency light(s) shall be energized simultaneously.

4. Master alarm status lights shall be visible from any location in a space module.

b. Advisory and Alerting - Displays such as multifunction displays, cathode ray tube displays, head-up displays, collimated displays and other visual display devices displaying simultaneous and integrated information shall advise or alert operating personnel to information that becomes critical within the display.

c. Extinguishing Signal Lights - Signal lights shall be extinguished by one or more of the following methods:

1. Restoration of a within-tolerance condition without remedial action or as a result of automatic switch-over.

2. Correction of the situation as a result of remedial action by the crew.

3. Performance of some action by the crew which is directly related to the controls of the affected system or component. This action indicates one or more of the following:

a) An acknowledgement of the occurrence of the malfunction.

b) The completion of indirect remedial action.

c) The shutting down of the malfunctioning system or component.

d. Unambiguous Signals - CWS information shall be presented unambiguously, identifying the actual problem.

e. Color - The color of CWS indicator lights shall conform to the designation given in Paragraph 9.5.3.2 i.

f. Brightness - Indicator lights shall be at least three times brighter than the other indicators on the same panel.

g. Flashing lights - Flashing lights shall only be utilized when it is necessary to call the operator's attention to t A condition requiring immediate action. The flash rate shall be within 3 to 5 flashes per second with approximately equal duration on ad off time. The light shall illuminate and burn steadily if the indicator is energized and the flasher device fails.

9.4.4.3.4 Audio Caution and Warning System Display Design Requirements

{A}

9.4.4.3.4.1 Audio Alarm Characteristics Design Requirements

{A}

Requirements for the design of audio alarm signals are provided below.

a. Frequency:

1. Range - The frequency range shall be between 200 and 5,000 Hz and, if possible, between 500 and 3,000 Hz. Frequencies below 500 Hz shall be used when signals must bend around obstacles or pass through partitions. The selected frequency band shall differ from the most intense background frequencies.

2. Spurious signals - The frequency of an alarm tone shall be different from that of the electric power employed in the system to preclude the possibility that a minor equipment failure may generate a spurious signal.

b. Intensity

1. Compatibility with acoustical environment - The intensity, duration, and source location of audio alarms and signals shall be compatible with the acoustical environment of the intended receiver as well as the requirements of other personnel in

the signal areas.

2. Compatibility with clothing and equipment - As applicable, audio signals shall be loud enough to be heard and understood through equipment or garments.

3. Discomfort - Audio alarm signals shall not be of such intensity as to cause discomfort. The limits established in paragraph 5.4.3 Acoustics Design Requirements shall not be exceeded.

4. Audibility - A signal-to-noise ratio of at least 20 dB shall be provided in at least one octave band between 200 and 5,000 Hz at the operating position of the intended receiver.

5. Pressure operated gain control switches to compensate for volume attenuation in underpressurized areas shall be provided.

c. Alerting Capability:

1. Attention - Signals with high alerting capacity shall be provided when the system or equipment imposes a requirement on the operator for concentration of attention. Such signals shall not, however, be so startling as to preclude appropriate responses or interfere with other functions by holding attention away from other critical signals.

2. Onset and sound pressure level - The onset of critical alerting signals shall be sudden, and at a sound pressure level as specified in b.4. above.

3. Headset - When the operator is wearing earphones covering both ears during normal equipment operation, the audio alarm signal shall be directed to the operator's headset as well as to the work area.

d. Discriminability:

1. Use of different characteristics - When several different audio signals are to be used to alert an operator to different types of conditions, discriminable difference in intensity, pitch, or use of BEATS and HARMONICS shall be provided. If absolute discrimination is required, the number of signals to be identified shall not exceed four.

2. Action segment - The identifying or action segment of an audio emergency signal shall specify the precise emergency or condition requiring action.

3. Critical signals - The first 0.5 second of an audio signal requiring fast reaction shall be discriminable from the first 0.5 second of any other signal that may occur.

4. Differentiation from routine signals - Audio alarms intended to bring the operator's attention to a malfunction or failure shall be differentiated from routine signals, such as normal operation noises.

5. Prohibited types of signals - The following types of signals shall not be used as alarms where possible confusion might exist because of the operational environment:

a) Modulated or interrupted tones that resemble navigation signals or coded radio transmissions.

b) Steady signals that resemble hisses, static, or sporadic radio signals.

c) Trains of impulses that resemble electrical interference whether regularly or irregularly spaced in time.

d) Simple warbles that may be confused with the type made by two carriers when one is being shifted in frequency (beat-frequency-oscillator effect).

e) Scrambled speech effects that may be confused with cross modulation signals from adjacent channels.

f) Signals that resemble random noise, periodic pulses, steady or frequency modulated simple tones, or any other signals generated by standard countermeasure devices (e.g., "bagpipes").

e. Masking Other Critical Channels - Audio alarm signals shall not interfere with any other critical functions or mask other critical audio signals.

9.4.4.3.4.2 Audio Alarm Control Design Requirements

{A}

Requirements for the design of controls for audio alarm devices are presented below.

a. Automatic or Manual Shut-Off - When an audio signal is designed to persist as long as it contributes useful information, a shut-off switch controllable by the operator, the sensing mechanism, or both, shall be provided, depending on the operational situation and personnel safety factors.

b. Automatic Reset - Whether audio alarm signals are designed to be terminated automatically, by manual control, or both, an automatic reset function shall be provided. The automatic reset function shall be controlled by the sensing mechanism which shall recycle the signal system to a specified condition as a function of time or the state of the signaling system.

c. Volume Control:

1. Automatic or manual - The volume (loudness) of an audio alarm signal shall be designed to be controlled by the operator, the sensing mechanism, or both, depending on the operational situation and personnel safety factors. Control movements shall be restricted to prevent reducing the volume to an inaudible level.

2. Ganging to mode switches - Volume controls may be ganged to mode switches to provide maximum output during mission phases in which intense noise may occur and to provide reduced volume at other times. Ganging shall not be accomplished if there is a possibility that intense noise may occur in an emergency situation during a mission phase in which the volume would be decreased below an audible level.

9.4.4.3.4.3 Verbal Alarm Signal Design Requirements

{A}

Requirements for the design of verbal CWS signals are presented below.

a. Nature of Signals - Verbal alarm signals shall consist of:

1. An initial alerting signal (non-speech) to attract attention and to designate the general problem.

2. A brief standardized speech signal (verbal message) which identifies the specific condition and optionally suggests appropriate action.

b. Intensity - Verbal alarms for critical functions shall be at least 20 dB above the speech interference level at the operating position of the intended receiver.

c. Vocal Criteria:

1. Type of Voice - The voice used in recording verbal alarm signals shall be distinctive and mature.

2. Delivery style - Verbal alarm signals shall be presented in a formal, impersonal manner.

d. Speech Processing - Verbal alarm signals shall be processed only when necessary to increase or preserve intelligibility, such as by increasing the strength of consonant sounds relative to vowel strength. Where a

signal must be relatively intense because of high ambient noise, peak-clipping may be used to protect the listener against auditory overload.

e. Message Content - In selecting words to be used in audio alarm signals, priority shall be given to intelligibility, ability to convey

desired message, and conciseness in that order.

f. Critical Verbal Alarms - Critical verbal alarm signals shall be repeated with not more than a 3 second pause between messages until the condition is corrected or overridden by the crew.

g. Verbal messages - Verbal messages, if implemented, shall be annunciated sequentially.

9.4.5 Advisory and Tutorial Displays
{A}

9.4.5.1 Advisory and Tutorial Design Requirements
{A}

9.4.5.1.1 Advisory Display and Annunciation Requirements
{A}

Requirements for the design of advisory displays are presented below:

a. Definition of an Advisory Display - System initiated messages advising of a processs status or other discrete event. Examples: Rendezvous solution complete, mass memory search for format in progress. Crew programmed reminder alerts keyed to time, orbit phase, bi-level state, parameter limit.

b. Annunciation Requirements:

1. Local, visual and aural annunciation may be provided.

2. Message shall accompany all alerts.

3. A history of all messages shall be maintained and available for crew recall.

4. If advisory display is crew programmed the option shall be provided to direct it to all workstations or to a single designated workstation.

5. If advisory display is not crew programmed it shall be limited by the specific workstation.

6. If advisory displays are crew programmed aural annunciation, the options shall be provided to direct them to one or more work locations.

9.4.5.1.2 Tutorial Display and Annunciation Requirements
{A}

Requirements for the design of tutorial displays are provided below:

a. Definition of a Tutorial Display - Messages denoting illegal keyboard syntax, or for assisting in proper completion of required inputs. These are limited to software configuration requirements.

b. Annunciation Requirements:

1. No tones/lights shall be used.

2. Messages shall be limited to the workstation in use.

9.5 LABELING AND CODING
{A}

9.5.1 Introduction
{A}

Labeling and coding standards for workstations are presented in this section. The labeling portion describes the design and placement of alphanumerics and markings. The coding section describes types of coding, general coding requirements, and symbology.

(Refer to Paragraph 9.3, Controls, for material on labeling requirements for specific controls.)

(Refer to Paragraph 9.4.2.3.3.9, Visual Display Terminals, for labeling and coding requirements specific to visual display terminals.)

9.5.2 Labeling and Coding Design Considerations

{A}

Factors that should be considered when designing and implementing labeling and coding are presented below.

a. General Applications - Labels, legends, markings, codes, or a combination of these, should be provided whenever it is necessary for crewmembers to identify, interpret, follow procedures, or avoid hazards, except where the message to be conveyed is already obvious to the observer.

b. Design Factors - Factors that should be considered in the design and application of labeling and coding include, but are not limited to the following:

1. Accuracy of identification required.

2. Time available for recognition or other responses.

3. Distance at which material must be read.

4. Illuminant level and color.

5. Criticality of the function labeled.

6. Consistency of labeling and coding design within and between systems.

c. Coding Use - Coding should be used when it results in one or more of the following advantages.

1. Improved accuracy of crewmember performance.

2. Increased speed of performance.

3. Increase in total amount of work that can be comfortably performed.

4. Allows crewmember to successfully undertake tasks of greater complexity than would be possible without coding.

d. Coding Applications - Coding should be used to improve the information processing ability of crewmembers. Applications include, but are not limited to, the following:

1. Highlighting of:

a) Critical information.

b) Unusual values.

c) High priority messages.

d) Error in entry.

e) Items requiring a response.

f) New information.

2. Facilitation of:

a) Discrimination between individual display elements.

b) Identification of functionally related display elements.

c) Indication of relationship between display elements.

d) Identification of critical information within a display.

e) Discrimination of controls.

e. Mobile Equipment - To minimize crew effort and the time consuming manipulation of mobile equipment, markings and labeling should be utilized to assist in the identification of related items and their proper spatial orientation.

f. Symbology:

1. Design goals - Basic goals of symbol design are:

a) Fast recognition of symbol meaning.

b) Accurate recognition of symbol meaning.

c) Symbol meaning should be easy to learn and remember.

d) Easy differentiation between symbols.

2. Standardization - Preference should be given to symbols whose meaning is widely recognized and established. Symbols should be standardized within and between systems.

3. Complexity - Symbol detail should not be any greater than required to make the symbol easily recognizable.

4. Symbology and text - When it is not clear that all users will understand a symbol's meaning, both symbol and word labels should be used.

5. Borders - A border should be used around a symbol where feasible.

6. Icons - Symbols that bear a pictorial resemblance to their intended meaning are preferred for ease of learning and remembering.

7. Orientation - When a symbol must be viewed and recognized from more than one orientation (e.g., right-side-up and upside-down) it should be designed to have enough radial symmetry to be easily recognizable from all anticipated viewing positions. The problem arises because it can be difficult to recognize familiar images viewed from orientations substantially different (more than about 45 degrees) from the familiar one. An alternative, when using non-symmetrical symbols, is to teach crewmembers to recognize the symbol in different orientations.

8. Dot matrix - If symbols are to be presented in a dot matrix format, their design should be optimized to take into account the differences between dot matrix and printed images (e.g., dot matrix images can have diagonal lines with a staircase appearance, or images with lower resolution).

9.5.3 Labeling and Coding Design Requirements

{A}

9.5.3.1 Labeling Design Requirements

{A}

9.5.3.1.1 Labeling Standardization Design Requirements

{A}

Requirements for standardizing labeling are listed below.

a. Standardization - To the extent practical, labeling shall be standardized between and within systems.

b. Categories - Different labeling categories shall be distinct from one another (e.g., it shall be obvious with a quick glance that a label with operating instructions is not an emergency procedure or a stowage label).

9.5.3.1.2 Readability Design Requirements

{A}

The readability of labels and markings shall be maximized. The following requirements apply.

a. Vibration, Motion, and Illumination - Labels and markings shall allow easy and accurate reading in the operational environment, which includes vibration, motion, and illumination considerations.

b. Concise and Unambiguous - Labels shall be as concise and unambiguous as possible while still conveying the intended information.

c. Language - Labels shall be written in the English language.

d. Redundancy - Redundancy shall be minimized.

e. Accuracy - Labels and markings shall provide the required accuracy of identification.

f. Size - The size of labels and markings shall be appropriate for all distances from which they must be read.

(Refer to Paragraph 9.5.3.1.14.6, Character Height Design Requirements, for additional requirements.)

g. Illumination - Labels and markings shall be designed to be read at all expected illumination levels and color characteristics of the illuminant.

h. Critical Function - The design of labels and markings shall take into account the criticality of the function to be labeled.

i. Specular Reflection - The design of labels and markings shall minimize the effects of specular reflection on their readability. A matte or lusterless finish shall be used.

j. Sharpness, Contrast, and Wear - Labels and markings shall be sharp, have high contrast, and not lose readability as a result of wear.

k. Clutter - Labeling and markings shall be designed and placed so as to minimize visual clutter that could result in information overload.

l. Iconic/Symbolic Labels - Iconic or symbolic labels shall be permitted.

9.5.3.1.3 Display Label Placement Design Requirements

{A}

Requirements for display label placement are given below.

a. Labels should normally be placed above the controls, displays, etc., they describe. When the panel is above eye level, labels may be located below if label visibility will be better and if it is clear that the label is for one particular control, display or connector.

b. Orientation - All markings and labels shall be oriented horizontally to the common plane so that they may read quickly and easily from left to right (vertical orientation shall be avoided whenever possible).

c. Display Labels - Labels identifying display functions shall be placed on the panel above the display.

d. Curved Surfaces - Placement of labels on curved surfaces shall be avoided when possible.

d. Visibility - Markings shall be located so that they are visible to crewmembers in the normal position of access or operation.

f. Overhead Panels - On overhead panels, markings and labeling shall be oriented such that they appear upright when observed from the operational viewing angle.

g. Clutter - Markings shall be spaced to avoid a cluttered appearance.

h. Association Errors - The arrangement of markings on panels shall be such that errors of association of one marking or set of markings with adjacent ones shall not be possible.

9.5.3.1.4 Scale Marking Design Requirements

{A}

Requirements for the design of scale markings are provided below:

a. Accuracy:

1. Display range and readout accuracy shall not exceed the needs of the crew to manage the equipment for which the displays are provided.

2. Scale markings shall not permit readout accuracies that are more precise than the accuracy of the input signal.

3. In general, scales that are to be read quantitatively to the nearest graduation mark shall be designed so that interpolation between graduation marks is not necessary. Interpolation, if required, shall be limited to one half the distance between minor graduation marks.

b. Interval Values:

1. The graduation intervals shall progress by 1, 5, or 2 units or decimal multiples thereof, in that order of preference.

2. The number of graduation marks between numbered graduation marks shall not exceed 9.

c. Scale Markings (High Luminance - above 1 ft-L):

1. The minimum width of major, intermediate, and minor marks shall be 0.32 mm (0.0125 in.).

2. The length of major, intermediate, and minor graduation marks shall be at least 5.6 mm, 4.1 mm, and 2.5 mm (0.22, 0.16, and 0.09 in.), respectively.

3. The minimum distance between major graduation marks shall be 13 mm (0.5 in.).

4. Minor graduation marks may be spaced as close as 0.89 mm (0.035 in.), but the distance shall be at least twice the stroke width for white marks on black dial faces and at least one stroke width for black marks on white dial faces.

d. Scale Markings (Low Luminance - below 1 ft-L):

1. The minimum width of a major graduation shall be 0.89 mm (0.035 in.); the minimum width of an intermediate graduation shall be 0.76 mm (0.030 in.); and the minimum width of a minor graduation shall be 0.64 mm (0.025 in.).

2. The length of major, intermediate, and minor graduation marks shall be at least 5.6 mm, 4.1 mm, and 2.5 mm (0.22, 0.16, and 0.10 in.), respectively.

3. The minimum distance between major graduation marks shall be 16.5 mm (0.65 in.).

4. Graduation marks shall be spaced a minimum of 1.5 mm (0.06 in.) between centerlines.

9.5.3.1.5 Alignment Marks/Interface Identification Design Requirements

{A}

Requirements for alignment marks and other interface identification are provided below.

a. Hardware Connectors

(Refer to Paragraph 11.10.3.5, Connector Identification/Alignment Design Requirements, for additional information.)

(Refer to Paragraph 11.5.3.2, Alignment Devices Design Requirements, for specific requirements.)

b. Orientation - When a piece of hardware requires a specific orientation that cannot be identified by alignment marks, arrows and/or labels shall be used to indicate the

proper orientation.

c. Color - Unless color coding is to be employed, alignment marks shall be lusterless white on dark colored hardware and lusterless black on light colored hardware.

d. Identification - Interface identification shall be used to indicate the relationship between unattached items that are used together, except when this relationship is obvious.

e. Tethered Equipment - Interface identification shall not be used for movable items tethered to a mating part (e.g., dust cap for an electrical connector, hinged lid for a stowage container, etc.)

9.5.3.1.6 Equipment Identification Design Requirements

{A}

Requirements for equipment identification are listed below.

a. Equipment Marking - Equipment that must be located, identified, observed, or operated by a crewmember shall be marked with nomenclature that describes the function of the item and its pertinent interfaces. However, items whose use is obvious to the crew (e.g., food table, windows, etc.) are exempt from this requirement.

b. Numbered Items - Multi-quantity items that require individual distinction but are not serialized shall be individually numbered.

c. Serial Numbers - Multi-quantity items that are serialized shall display the serial number as part of the identification.

d. Name Plates - Name plates depicting manufacturer's name, serial numbers, etc., shall not be mounted on the control or display surface area of any equipment.

e. Connecting Cables - Connecting cables shall be marked with nomenclature or code describing the connecting cable's interface end points.

9.5.3.1.7 Location and Orientation Coding Design Requirements

{A}

Requirements for location and orientation coding are listed below.

a. Location and Orientation Designation - A system of location and orientation coding shall be established for the purpose of designating and locating crew interface items. The system shall be so designed as to permit a unilateral logical assignment of codes to items added or relocated.

b. Location Maps - A map of location codes shall be provided at the entrances to a room or sub-volume where the coding scheme is not obvious to the crewmember.

c. Location Code:

1. All fixed crew interface items (e.g., equipment, control/display stations, stowage containers, connector panels, etc.) shall display a location code adjacent to the identification marking.

2. Movable items that require a crew interface but are not stowed in a containment shall display a location code on a fixed surface adjacent to the item.

d. Orientation Designation - When the orientation of the vehicle axes is significant to crew operations and is not obvious, axis designators shall be displayed on appropriate surfaces.

9.5.3.1.8 Operating Instruction Design Requirements

{A}

Requirements for the design and use of operating instructions are provided below.

a. Location - Operating instructions shall be

located on or near equipment whose operation is not obvious to a crewmember.

b. Completeness - Operating instructions shall be complete enough to allow accurate task performance.

c. Equipment Name - The instructions shall have the title of the equipment to be operated centered above the text (see Figure 9.5.3.1.8-1).

d. Grouping - Instructions shall be grouped and titled by category (e.g., installation, removal, activation, calibration, etc.) if appropriate. (See example in Figure 9.5.3.1.8-1).

e. Case - Instructional text shall use upper and lower case letters (See Figure 9.5.3.1.8-1).

SMMD

OPERATION

1. Obtain note pad
2. Place specimen on tray
3. MASS/ON/TEMP — MASS
4. RESET — press
5. Control lever — RELEASE (hold until counter stops)
6. Control lever — LOCK
7. Log reading on note pad
8. Repeat measurement for total of 3
9. MASS/OFF/TEMP — OFF
10. Control lever — LOCK (verify)
11. Remove specimen and log SMMD readouts on tag
12. Process specimen
13. If necessary clean tray and tie-down

CALIBRATION

1. Obtain SPI food log
2. Measure tray temp (M487 Digital Thermometer)
3. Log reading
4. MASS/OFF/TEMP — MASS
5. RESET — press
6. Control lever — RELEASE (hold until counter stops)
7. Control lever — LOCK
8. Log reading in Food Log
9. Repeat for a total of 5
10. Calib. points 0,50,100,150,250,350,500,750,900,0
11. MASS/OFF/TEMP — OFF
12. Voice record data at any convenient time

Reference: 1, Page 4.8-7

MSIS-104

Figure 9.5.3.1.8-1. Operating Instructions

f. Title Selection - The titles of equipment, controls, displays, switch positions, and connectors shall be listed in upper case letters only. Care shall be taken to ensure that all title nomenclature is consistent with procedural handbooks and checklists.

g. Required Tools - Instructions for removal of stowage items shall list the tools required, if any, prior to the instructional text. Markings shall be used to locate the fasteners to be removed if clarification is required.

9.5.3.1.9 Stowage Container Labeling Design Requirements

{A}

Requirements for stowage container labeling are provided below.

a. Purpose - Stowage containers shall be labeled so that items are easy to find and return to place.

b. Transparent - Where practical, containers shall be transparent, thus allowing identification of contents at a glance.

c. Contents List - Each stowage container shall display a list of contents on its front surface visible to the crewmember. Items shall be listed one per line and launch quantities noted if greater than one.

d. Label Revision - Provisions shall be made to permit in-flight revisions to, or replacement of stowage labels on all stowable containers.

e. Individual Crew Items - Items allocated to a specific crewmember shall be identified on the listing with the user's title, name, or other coding technique.

f. Subdivided Containers:

1. If a storage container is subdivided internally into smaller closed containers, the sub-containers shall carry a list of contents.

2. If a sub-container is open to view and its contents are obvious, it is exempt from this requirement.

3. If the available marking space on a sub-container is insufficient to display the complete content titles, a contents list shall be displayed elsewhere and clearly identified as belonging to the sub-container.

4. The specific contents of each sub-container and its code shall be listed on the front surface of its container or near it.

g. Similar Item Labeling - Containers with designated locations for placement of several similar items (e.g., socket wrenches in a tool kit) shall have each location identified with the title of the item stowed.

9.5.3.1.10 Failed/Expendable Item Design Requirements

{A}

Requirements for the labeling of failed/expended items are provided below.

a. Failed Items - A method shall be provided for visually marking failed and expended items (e.g., equipment controls, displays, connectors, etc.) to indicate their unusable status. Color-coded labels with appropriate nomenclature (e.g., DO NOT USE) are preferred.

b. Discardable Items - Items to be discarded after use shall display a unique marking on the item. Color-coded labels with appropriate nomenclature (e.g., DISCARD) are preferred, and the method of disposal shall be included when applicable.

9.5.3.1.11 Contingency Labels and Marking Devices Design Requirements

{A}

Requirements for contingency labels and marking devices are provided below.

a. Blank Labels - Blank labels shall be provided to allow contingence labeling.

b. Marking Devices - Marking devices shall be supplied for marking blank labels and revising quantities noted on stowage labels.

9.5.3.1.12 Grouped Controls and Displays Design Requirements

{A}

Requirements for labeling of grouped controls and displays are provided below.

a. Group Identification - Functional groups of controls shall be clearly identified (e.g., by common color, by boundary lines.)

b. Labels of Functional Groups - Labels shall be used to identify functionally grouped controls and displays. Labels shall be located above the functional groups they identify.

c. Boundary Lines - When a line is used to enclose a functional group and define its boundaries, the labels shall be centered at the top of the group, in a break in the line. The width of the line shall not be greater than the stroke width of the letters.

d. Related Controls - When controls and displays must be used together in certain adjustments or activation tasks, appropriate labels shall indicate their functional relationships.

9.5.3.1.13 Caution and Warning Labels Design Requirements

{A}

Caution and warning labels are required for indicating potentially undesirable conditions. Requirements are provided below.

(Refer to 9.5.3.2i, Color Coding, and 9.4.4, Caution and Warning Displays, for related information.)

a. Identification - Caution and warning labels shall identify the type of hazard and the action that would prevent its occurrence.

b. Location - The caution markings shall be located in a position that permits sufficient opportunity for the crew to avoid the hazard.

c. Immediate Action Controls - All controls, buttons, and small handles or levers requiring immediate access shall have their panel background colored in accordance with the applicable sub-section of Section 9.5.3.2; large handles or levers shall be similarly colored on the handle or lever itself.

d. Emergency-Use Items:

1. Emergency-use items (e.g., repair kits, emergency lighting, fire extinguisher, etc.) shall display a unique marking (EMERGENCY USE) surrounded by diagonal yellow and black stripes (see "e" below") either on the item or adjacent to it.

2. For items located within a storage container, the diagonal striping shall be applied to the door of the container and the titles of the emergency items shall be included on the marking instead of the words EMERGENCY USE.

e. Warning Stripe Specification:

1. Warning stripes shall be alternate yellow 33538 and black 37038 per FED-STD-595a. The black stripes shall have a width not less than 1.6 mm (0.63 in.) and the yellow stripes shall be at least two times the width of the black stripes.

2. The striping shall be applied at a 45 degree angle rotated clockwise from the vertical.

3. The striping shall begin and end with a yellow strip.

4. The striping around a switch or button shall not be wider than 25 mm (1 in) or less than 3 mm (0.125 in).

5. If one side of a switch or button has less than 3 mm (0.125 in) space, no striping shall be applied to that side.

f. Label Specifications - Hazard identification labels shall use a letter size and spacing large enough to convey the warning (see Figure 9.5.3.1.13-1).

9.5.3.1.14 Alphanumeric Design Requirements

{A}

9.5.3.1.14.1 Font Style Design Requirements

{A}

Requirements for the selection of font style are provided below.

a. Dark-Color Characters - Futura font shall be preferred. Commercial font styles for dark-color opaque alphanumerics on light-color opaque or transilluminated backgrounds and for hardware labels are indicated below in descending order of preference.

1. Fonts for engraved lettering:

a) Futura Demibold.

b) Gorton Normal.

c) Gorton Condensed.

2. Fonts for engraved numerals:

a) Futura Demibold.

b) Gorton Modern.

c) Gorton Normal.

3. Fonts for printed lettering and numerals:

a) Futura Demibold.

b) Futura Medium.

c) Alternate Gothic No. 3.

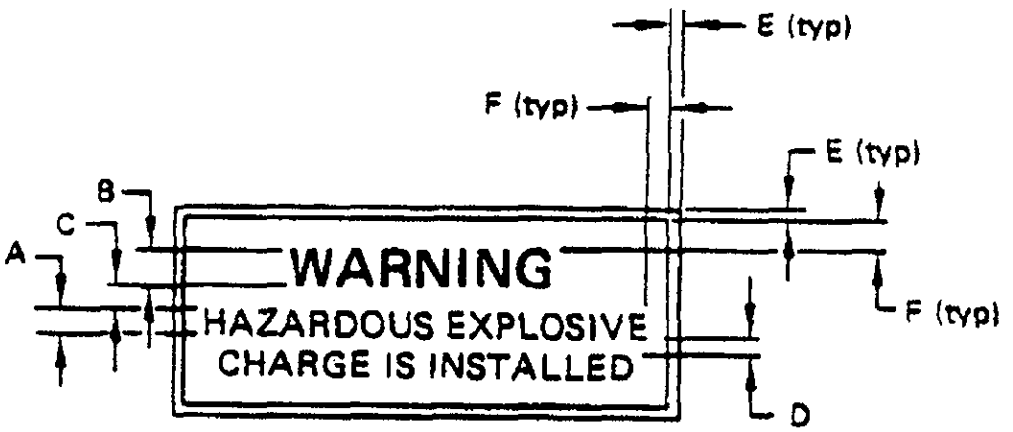

1/16 (typ) for labels
No radius for markings

A – Text or minor lines of lettering	= A
B – Heading or major line of lettering	= 1.25A to 2A
C – Spacing between heading and text	= 0.65A to A
D – Spacing between lines of text	= 0.50A
E – Border width	= 0.60A
F – Background border	= A

Reference: 1, page 4.8-11

MSIS 105

Figure 9.5.3.1.13-1. Letter Size and Spacing for Caution and Warning Labels

b. Light-Color Characters - Futura Medium type shall be used for transilluminated or light-color opaque markings on dark opaque backgrounds.

c. Fit Problems - The use of condensed type (Future Condensed) or abbreviations shall be the preferred method for solving line length "fit" problems rather than a reduction in type size.

d. Stenciled Characters - Stencil-type characters shall not be used on display/control panels or other equipment.

9.5.3.1.14.2 Punctuation Design Requirements

{A}

Requirements for punctuation marks used on labels are provided below.

a. Use - The use of punctuation marks shall be kept to a minimum.

b. Periods - Periods shall be omitted except when needed to preclude misinterpretation.

c. Hyphens - Hyphens shall be avoided whenever possible.

d. Parentheses and Ampersands - Parentheses and ampersands shall not be used on the display and control panel or other crew equipment.

e. Slashes - The slash (/) shall be used in place of the words "and" and "or" where appropriate, and may be used to indicate multiple functions.

9.5.3.1.14.3 Upper/Lower Case Design Requirements

{A}

Requirements for the use of upper and lower case lettering for labeling are provided below.

a. Abbreviations - Lower case letters shall be used in abbreviations or symbols in which their use is the commonly accepted practice (e.g., He, pH, Hg, etc.).

b. Operating Instructions - Equipment operating instructions shall use lower case for text and upper case for the first letter of a sentence, headings, titles of equipment, and references to control/display panel markings.

9.5.3.1.14.4 Titles Design Requirements

{A}

Panel titles, subtitles, and mode titles shall be spelled out when possible.

(Refer to Paragraph 9.6.2.8.2 k, Abbreviations and Acronyms, for additional requirements on the use of abbreviations.)

9.5.3.1.14.5 Special Character Design Requirements

{A}

Requirements for special characters are described below.

a. Subscript and Superscript Size - Subscripts and superscripts shall be 0.6 to 0.7 times the height of associated characters.

b. Subscripts - Numeric subscripts and upper case letter subscripts shall be centered on the baseline of associated characters.

c. Lower Case Letter Subscripts - The base of lower case letters and the ovals of g, p, q, etc., shall be at the same level as the base of adjacent capital letters.

d. Degree Symbol - The degree symbol shall be centered on an imaginary line extended from the top of the F or C symbols.

e. Pound or Number Symbol (#) - The pound or number symbol shall be centered on an imaginary line extended from the top of the associated numerals and placed approximately two stroke widths away from them.

9.5.3.1.14.6 Character Height Design Requirements

{A}

Requirements for character height are presented below.

a. Character Height - Character height depends on viewing distance and luminance level. At a viewing distance of 710 mm (28 in) the height of letters and numerals shall be within the range of values given in Figure 9.5.3.1.14.6-1.

b. Variable Distance - For a distance (D) other than 710 mm (28 in), multiply the values in Figure 9.5.3.1.14.6-1 by D/710 mm (D/28 in.) to obtain the appropriate character height.

c. Size Categories - Where feasible and appropriate, characters used in labeling shall be graduated in size. To determine character height, all nomenclature on a label may be divided into three categories: titles, subtitles, and text. The nominal heights at a viewing distance of 710 mm (28 in) for each category shall be:

Markings	Character height	
	3.5 cd/m^2(1 ft-L) or below	Above 3.5 cd/m^2 (1 ft-L)
For critical markings, with position variable (e.g., numerals on counters and settable or moving scales):	5-8 mm (0.20-0.31 in.)	3-5 mm (0.12-0.20 in.)
For critical markings, with position fixed (e.g., numerals on fixed scales, controls, and switch markings, or emergency instructions):	4-8 mm (0.16-0.31 in.)	2.5-5 mm (0.10-0.20 in.)
For noncritical markings (e.g., identification labels, routine instructions, or markings required only for familiarization):	1.3-5 mm (0.05-0.20 in.)	1.3-5 mm (0.05-0.20 in.)

MSIS-106

Reference: 2, Page 121

Figure 9.5.3.1.14.6-1. Character Height—710 mm (28 in.) Viewing Distance

1. Titles, 5 mm (0.19 in).

2. Subtitles, 4 mm (0.16 in).

3. Text, 3 mm (0.12 in).

In general, when moving to the next larger character size, the character height shall increase by approximately 25 percent.

d. Space Limitations - The use of the same size letters and numerals for all categories on a label is acceptable for solving space limitation and clarity problems. In this case, the height of lettering and numerals shall be not less than 3 mm (0.12 in).

9.5.3.1.14.7 Character Width Design Requirements

{A}

Requirements for character width are given below.

a. Letters - The width of letters shall preferably be 0.6 of the height, except the letter "I" which shall be one stroke in width, the letters "J" and "L" which shall be 0.5 of the height, the letter "M", which shall be 0.7 of the height, and the letter "W", which shall be 0.8 of the height.

b. Numerals - The width of numerals shall preferably be 0.6 of the height, except for the numeral "4", which shall be one stroke width wider and the numeral "1", which shall be one stroke in width.

c. Wide Characters - Where conditions indicate the use of wider characters, as on a curved surface, the basic height-to-width ratio may be increased to 1:1.

9.5.3.1.14.8 Stroke Width Design Requirements

{A}

Requirements are listed below.

a. Height-to-Stroke Ratio - Marking letters and numerals shall have a height-to-stroke ratio of 5:1 to 8:1, depending on the application.

b. Transilluminated Background - Opaque markings on a transilluminated lighted background shall have a height-to-stroke ratio of 5:1 to 6:1.

c. Transilluminated Markings - Transilluminated markings on a dark background or markings used on integrally lighted instruments shall have a height-to-stroke ratio of 7:1 to 8:1.

d. General Purpose Illumination - Characters used on display panels and equipment when viewed under general purpose flood lighting or normal daylight conditions shall have a height-to-stroke ratio of 6:1 to 7:1.

9.5.3.1.14.9 Character Measurement Design Requirements

{A}

Requirements for determining character dimensions are presented below.

a. Measurement - All letters and numeral measurement shall be made from the outside edges of the stroke lines for other than machine engraving on opaque surfaces.

b. Engravings - For all mechanical engraving on opaque surfaces, the dimension controlling the size of letters and numerals shall be measured from centerline to centerline of the stroke.

9.5.3.1.14.10 Spacing Design Requirements

{A}

Spacing requirements for text and numerals are given below.

a. Character Spacing - The spacing between letters within words and between digits in a multi-digit number shall be the approximate visual equivalent of one stroke width between two straight-sided letters such as H and I. (This requirement is intended to accommodate the normal commercial typographical practice of spacing letters to achieve a consistent visual continuity. This permits close spacing of open letters such as C and T to avoid large apparent gaps).

b. Word Spacing - The spacing between words shall be the approximate visual equivalent of the letter W between two straight-sided letters such as N and F.

c. Line Spacing:

1. The spacing between lines of related text shall be 0.5 of upper case letter height.

2. Spacing between headings and text shall be 0.6 to 1.0 of upper case letter height.

9.5.3.2 Coding Design Requirements

{A}

Requirements for the implementation of various types of coding are presented below.

a. General Coding Requirements:

1. Standardization - The application of coding techniques shall be consistent within and between systems.

2. Clutter - Coding shall only be used where useful, as excessive coding can have the negative effect of adding to visual clutter.

3. Decrements - Coding shall not reduce legibility or increase transmission time.

4. Common Usage - Codes shall conform to conventional population stereotypes and general user expectations when these exist.

5. When feasible, meaningful codes shall be used rather than arbitrary codes. For example, use M for male and F for female rather than 1 for male and 2 for female.

b. Brightness Coding:

1. Brightness coding shall be employed to differentiate between an item of information and adjacent information.

2. No more than three levels of brightness shall be used. Each level shall be separated from the nearest by at least a 2:1 ratio.

c. Size Coding:

1. Symbols - Where size difference between symbols is employed, the major dimensions of the larger shall be at least 150% of the major dimensions of the smaller with a maximum of three size levels permitted.

2. Controls - No more than three different sizes of controls shall be used in coding controls for discrimination by absolute size. Controls used for performing the same function on different items or equipment shall be the same size.

d. Pattern Coding - Pattern coding shall be used to differentiate areas of interest to the observer (e.g., the normal, warning, and danger operating zones of a scale), and reduce operator search time.

e. Location Coding - Controls associated with similar functions shall be in the same relative location from panel to panel.

f. Shape Coding - Shape coding of controls shall be used to improve their identifiability through both the visual and tactile senses. Requirements are listed below.

1. Ease of operation - The coded feature shall not interfere with ease of control manipulation.

2. Position and orientation independence - Shapes shall be identifiable and differentiable by the hand regardless of the position and orientation of the control knob or handle.

3. Gloved operation - Shapes shall be tactilely identifiable when IVA gloves are worn, where applicable.

4. Mounting - Shape coded knobs and handles shall be positively and non-reversibly attached to their shafts to preclude incorrect attachment when replacement is required.

g. Underlining, Bold Face, Italics - Coding techniques shall be used when it is necessary to direct a reader's attention to a particular element of alphanumeric text. These techniques shall include, but not be limited to, underline, bold face type, and italics.

h. Flash Coding:

1. Use - The use of flashing lights shall be minimized, and used only where immediate attention is required.

2. Flash rate:

a) No more than 2 flash rates shall be used.

b) Where one rate is used, the rate shall be between 3 and 5 flashes per second.

c) Where two rates are used, the second rate shall be less than 2 per second.

3. Duty cycle - Flashing lights shall have approximately equal amounts of ON and OFF time.

4. Simultaneous signals - Flashing lights which could be simultaneously active shall have synchronized flashes.

5. Failure indication - If the indicator is energized and the flasher device fails, the light shall illuminate and burn steadily.

i. Color Coding - Color identification numbers used below are per FED-STD-595.

1. Color difference - Only one hue within a color category (e.g., reds, greens) shall be used in a given coding scheme, and that color shall always be associated with a single meaning.

2. Number of colors - No more than 9 colors, including white and black, shall be used in a coding system.

3. Ambient light:

a) Color coding shall be compatible with anticipated ambient lighting throughout the mission.

b) Color-coding shall not be used as a primary identification medium if the spectral characteristics of ambient light during the mission, or the operator's adaptation to that light, varies as the result of such factors as solar glare, filtration of light, and variation from natural to artificial light.

4. Familiar color meaning - Colors which are consistent with common usage and existing standards with respect to application are listed below. All color coordinates for transilluminated lighting are per CIE (Commission International del' Eclarirage Coordinates Chart Chromaticity Diagram 1931).

a) Red #21105 - Emergency, warning, and master alarm lights; safety controls; critical controls requiring rapid identification; emergency shutdown; control panel outline of a functionally critical emergency nature. Transilluminated devices shall have coordinates of x=.633 (+/-.03) y=.255 (+/-.03).

(Note: Under ambient red lighting, use orange-yellow and black striping.)

b) Yellow #33538 - Caution; emergency exits; safety controls associated with emergencies of a less critical nature. Transilluminated devices shall have coordinates of x=.455 (+/-.03) y=.550 (+/.03).

c) Yellow #33538 with black #37038 stripe - Immediate access; exit releases.

d) Orange #32246 - Hazardous moving parts; machinery; start switches, etc.

e) Green #14187 - Important and frequently operated controls having no urgent or emergency implications. Transilluminated devices shall have coordinates of x=.155 (+/-.05) y=.750 (+/-.05). Alternatively, for transilluminated devices, a wave length of 520nm is acceptable.

f) Green (Sage) #14260 - First aid and survival.

g) Blue #25102 - Advisory (not recommended for general use).

h) Purple #37142 (magenta) - Radiation Hazard.

i) White - Advisory (for transilluminated devices only) - Transilluminated devices shall have coordinates of x=.360 (+/-.03

y=.360 (+/-.03).

5. Color deficiency - To avoid confusion by color-deficient observers, do not use the color green if the color scheme uses more than six colors. If six or fewer colors including green #14260 and yellow are used, yellow #23655 shall be substituted for #33538. Red #11302 and blue #15177 may also be used; however, do not use red and green within the same complement.

6. Placards - The preferred markings and background color for placards are listed below.

Markings	Background
White	Black
Black	Yellow
Black	White
Yellow	Blue
White	Red
Blue	Yellow

7. Zone markings - On indicators where zone markings are used to indicate various operating conditions, the following requirements shall apply.

a) Primary colors shall be limited to red, yellow, orange, and green consistent with color selection criteria given above.

b) Zone markings shall be applied and located in a manner that facilitates easy removal.

c) Zone markings shall not interfere with the reading of quantitative markings.

d) When color is used to zone mark, the color shall be applied so that its meaning is consistent across applications.

8. Color Contrast

Color contrast - An important factor to consider when selecting colors is the contrast between various colors. This is necessary to ensure that each color is easily discriminated from the others. Although contrast is an important consideration, it should not be used without regard to other important factors such as convention or standard, inherent meaning, and consistency across displays.

a) The following color list shall be used to select colors that contrast maximally with the color just preceding it and satisfactorily with the earlier colors in the list. Colors (1) through (9) yield satisfactory contrast for red-green deficient as well as color-normal crewmembers. The remaining 13 are useful only for color-normal crewmembers.

(1) White.	*#19875*
(2) Black.	*#17038*
(3) Yellow.	*#13655*
(4) Purple.	*#17142*
(5) Orange.	*#12246*
(6) Light blue.	*#15102*
(7) Red.	*#11105*
(8) Buff.	*#33594*
(9) Gray.	*#36251*
(10) Green.	*#34138*
(11) Purplish pink.	*#31638*
(12) Blue.	*#35240*

(13) Yellowish- pink	*#33613*
(14) Violet	*#37142*
(15) Orange-yellow	*#33538*
(16) Purplish red	*#31136*
(17) Greenish yellow	*#33814*
(18) Reddish brown	*#30160*
(19) Yellow-green	*#34666*
(20) Yellowish brown	*#30260*
(21) Reddish orange	*#32246*
(22) Olive green	*#34108*

b) Color contrast shall be selected in conjunction with color conventions and standards, inherent meaning, and consistency across displays.

9.6 USER-COMPUTER INTERACTION DESIGN CONSIDERATIONS

{A}

9.6.1 Introduction

{A}

9.6.2 Data Display

{A}

9.6.2.1 Design Considerations for Data Display

{A}

a. Screen layouts should be carefully designed, modeled, and prototyped.

b. Visual consistency, such as command lines always starting at the bottom left of the screen, should be provided to the user.

c. Feedback, which is appropriate, rapid, and predicatable should be given for each user action.

d. Context should be provided to the user. (e.g., any currently active modes should be clearly indicated).

e. Required actions or commands should be easy to learn, and should follow some rational or logical sequence.

f. It should be easy to escape from, or abort, an action or process.

g. It should be difficult to make mistakes and easy to recover from mistakes that are made.

h. The design should allow the crewmember to focus attention on the task rather than on what they have to do with the system to accomplish that task.

i. The system should not force the crewmember to rely on either short-term or long-term memory. Information that the user needs should be displayed.

j. Extraneous information should not be included. Unnecessary, but potentially useful information should not be displayed, but should be available upon request.

9.6.2.2 Design Requirements for Data Display

{A}

a. Stand Alone - In general, data displays shall convey enough information to allow the user to interpret the data without referring to additional sources.

b. Shared Displays - If a single display monitor is used to display different categories of information alternately, none of the categories shall require continuous or concurrent monitoring.

9.6.2.3 Text
{A}

9.6.2.3.1 Design Considerations for Text
{A}

Under many conditions, reading text on a CRT is significantly slower than hard copy reading. However, comprehension of text is not necessarily different between a CRT and a hard copy. Extra care needs to be taken in the design of text displays so that the time to read text from a CRT is rapid and comprehension remains accurate.

a. Text should be presented using upper and lower case characters. Reading time is faster with upper and lower case characters than with all upper case.

b. Right justification with nonproportional spacing should NOT be used because under these conditions reading time is slowed.

c. Default text line spacing should be 150% of character height.

d. The default condition for line length should be between 52 and 80 characters. Line lengths of less than 52 characters result in slower reading times. An 80 character line is generally the accepted standard.

e. The default values for the margins in a text file should be set to permit viewing of all of the characters in the entire horizontal line.

f. Any required dedicated function areas in a text file should be located in a consistent area.

g. Users should have the ability to change the line spacing for an entire text file or for any particular section of a file.

h. Users should have the ability to set tabs for any particular section of a text file, including the entire file.

9.6.2.3.2 Design Requirements for Text
{A}

a. Upper and lower case - Text shall be presented using upper and lower case letters.

b. Justification - The default condition shall be to left justify all lines of text; however, options for right justification and fill-justification shall be available.

c. User Control - Users shall have control over various features of text display: justification, line length, space between lines, margins, font style and size.

9.6.2.4 Tables
{A}

9.6.2.4.1 Design Considerations for Tables
{A}

Tables are especially useful for comparing the features of two or more alternative conditions.

b. Titles should be in all capital letters, because the search time for individual words in capitals is faster.

c. Labels should be presented in all capital letters, because the search time for individual words in capitals is faster.

9.6.2.4.2 Design Requirements for Tables
{A}

a. Titles - All tables shall have a concise, descriptive title. Titles shall have a consistent location on tables.

b. labels - Each group of data in a table shall have a concise, descriptive, label that is separated from other characters and can easily be identified as the label.

c. Consistent Widths of Characters - The fonts and widths of numeric characters shall be consistent within a table. Highlighting of numeric characters by means of italics or bolding shall not change the width of numeric characters. Differences in fonts and/or widths of alphabetic characters within a table shall not affect column or row size or spacing.

d. Grouping - All displayed data necessary to support a user activity or sequence of activities shall be grouped together.

9.6.2.4.3 Matrix Tables
{A}

9.6.2.4.3.1 Design Considerations for Matrix Tables
{A}

A matrix table has a regular rows-by-columns structure in which rows represent elements of a large category, and similarly, the columns represent elements of another larger category. The data in the cells of the matrix are the values of the condition specified by the row element and the column element. A spread sheet and a correlation matrix are representative examples of a matrix. A user can obtain row information from a matrix by scanning horizontally (rows across columns), vertically (columns across rows), and diagonally (rows and columns simultaneously).

9.6.2.4.3.2 Design Requirements for Matrix Tables
{A}

a. Use - Matrix tables shall be used to present row-column data.

b. Arrangement - Data in matrix tables shall be displayed in a left-to-right, top-to-bottom array. Alphanumeric data shall be left justified; numeric data shall be arranged with decimal points aligned vertically (If a number does not have a visible decimal point, the decimal point shall be assumed.

c. Column Order - Material most relevant to the user or most frequently used shall be in the left column and shall progress to the least relevant in the far right column.

d. Labels - Labels for the row variables shall be located in the left-most column; labels for the column variable shall be located in the top row. When a column extends over more than one "page" vertically (i.e., the user has to scroll or page to continue reading the column), the same column labels shall be displayed form "page" to "page". Similarly, when a row extends over more than one "page" horizontally (i.e., the user has to scroll or page to continue reading the row), the same row labels shall be displayed form "page" to "page".

e. Readability - In tables with many rows or columns, a blank line, dots, or other distinctive feature shall be inserted after every fifth row or column as appropriate to help maintain one's place across columns or across rows.

f. Organization of Rows and Columns - When possible, rows and/or columns in a table shall be arranged i a systematic order (e.g., chronologically, alphabetically, sequentially, by magnitude, by importance, or according to function).

g. Discriminable rows and columns - Each column shall be discriminable from every other column by means of a physical cue, such as sufficient blank space or a line. Similarly, all rows shall be discriminable from one another by means of physical cues.

9.6.2.4.4 Functional Area Tables
{A}

9.6.2.4.4.1 Design Considerations for Functional Area Tables
{A}

A table that consists of functional areas has a less regular structure than a matrix, and in many ways, may resemble a data form. Unlike data forms, these tables can contain just data and not require any input. As a consequence of having less structure, such a table can present more varied types of information. The user can obtain information from these tables primarily by reading across rows while moving down columns; the function of the column is principally to align and label the data.

9.6.2.4.4.2 Design Requirements for Functional Area Tables
{A}

a. Use - A functional area table shall be used to display related data that has a less regular structure than a matrix. The data are organized into functional groups, similar to a completed data form.

b. Group size - Related data shall be displayed in groups which subtend five degrees of visual angle or less. The groups shall be visually distinct from one another.

c. Density - The ratio of filled display character spaces to the total number of character spaces should not exceed 30% under nominal operating conditions.

9.6.2.5 Graphics
{A}

9.6.2.5.1 Design Considerations for Graphics
{A}

A graphical display provides a pictorial representation of an object or a set of data. Graphical displays include lines, solid objects, and perspective drawings; bar, pie, and line charts and graphs; scatterplots; displayed meters; flowcharts and schematic diagrams; icons; and maps. The pictorial representation can be an analogue of the represented object or data or can be symbolic.

In addition, certain graphical displays combine analogue and symbolic representations.

a. There is some evidence that graphical displays seem to promote "holistic" processing (processing of the display as a whole; all of the details at once) whereas alphanumeric displays promote "serial" processing (processing of the display one piece at a time); this is especially true when there is time pressure. However, research findings have been equivocal and very task dependent.

b. Consider using a graphical display of data when users need to monitor changing data, quickly scan and/or compare sets of data.

c. Categorical or trend data should be represented graphically.

d. Continuous data which can be categorized without a loss in information content should be represented graphically.

e. To the greatest extent possible, graphs and charts should display all of the relevant information and only the relevant information for the user to complete the current step in the task. The user should be able to request more detailed data with a single action.

f. The user should be able to enlarge (and subsequentially to reduce) the graph, chart, or some subsection to "zoom in" on critical data.

9.6.2.5.2 Design Requirements for Graphics

{A}

a. Use - Types of graphical displays include icons, schematics, data graphs, maps, flow charts, and pictures. Graphical displays shall be used when they will convey information to the user more clearly, effectively, or quickly than other formats. For example, graphics may be used as follows:

1. A statistical data graph is appropriate when users need to monitor changing data, to scan a data set or sets quickly, to compare multiple sets of data, or to see trends in data.

2. A flowchart is appropriate when users need to follow a sequence of events that involves logical branching or to observe the temporal order of events.

3. A schematic is appropriate when users need to identify both the elements of a system and the spatial/temporal organization of those elements.

4. A map is appropriate when users need to determine spatial relations between objects.

b. User control - The user shall have the ability to change various physical features of a graphic to enhance his or her viewing capability, including enlarging and reducing the graphic or a subsection thereof, increasing the amount of detail (if additional detail is available, e.g., in a system schematic), and selecting different orientations or reference points (especially for maps and schematics).

c. Simplicity - Graphical displays shall maintain the visually simplest display consistent with their function.

e. Identification of Graphic Displays - All graphic displays shall have unique, meaningful titles by which users can identify and access the display.

f. Identification of Elements in Graphics - All elements in graphic displays (including objects in a schematic, geographical locations in a map, and axes in a data graph) shall be identifiable and discriminable by the user. The two most prominent techniques for providing cues for identification are labeling and symbols.

1. Labels shall be in close proximity to the object that they identify, but shall not obscure the element.

2. In addition to or in place of labels, symbolic coding (e.g., texture, color, or shape) shall be used when appropriate to aid users in identifying elements of graphical displays. Symbolic codes shall be accompanied by legends that provide the symbol and its referent.

9.6.2.6 Coding

{A}

9.6.2.6.1 Design Considerations for Coding

{A}

Coding is used for highlighting (i.e., to attract a user's attention to part of a display), as a perceptual indicator of a data group, or to symbolize a state or attribute of an object (e.g., to show a temperature level or for warning purposes).

a. Highlighting calls the user's attention to a feature of the display. Several highlighting methods are image reversal (reverse video), brightness/boldness contrast, color, underlining, blinking, flashing arrows, and changes in font.

1. If highlighting is to be used to attract the user's attention, the highlighting technique should be distinctive.

2. Highlighting of information should be minimized. A good rule of thumb for displays of nominal conditions is to

limit the maximum amount of highlighting to 10% of the display information.

b. Grouping is a powerful technique for representing the similarity or commonalty of data. Grouping can be accomplished by having similar data spatially close together in a display and/or by having similar data share a common perceptual attribute (e.g., color, shape, or size).

1. The use of perceptual grouping decreases search times and reduces confusability among stimuli; like elements are seen as belonging to the same group, even though they may be spatially close to confusable stimuli.

2. Displays with high information density should have an intermediate number of groups. If inherent functional groups of data exist, then they should be preserved. Displays should provide cohesive grouping of display elements so that users perceive large screens as consisting of smaller identifiable pieces or chunks.

3. Spatial distance should be used for redundant coding when possible. Limitations are physical screen size and amount of information to be displayed.

c. A symbolic code is used not simply to attract the user's attention or to indicate similarity, but to communicate the meaning of a display structure to the user. For example, the colors red and blue might be used to communicate heat and cold, respectively.

If potentially conflicting information must be presented, spatial distance should be used to separate the conflicting elements.

9.6.2.6.2 Design Requirements for Coding

{A}

a. Highlighting - Highlighting (display coding which serves only to call the user's attention to a feature of a display) shall be used only for important information (e.g., out-of-limit conditions) When conditions change and an item that was highlighted is no longer important (e.g., after an out-of-limits condition has been corrected), that item shall no longer be highlighted. The specific highlighting technique used (e.g., reverse video brightness contrast, boldness contrast, underlining, or blinking) shall not have a detrimental impact on the user's perception of the display.

b. Grouping - Coding shall be used to group functionally similar information and to indicate membership in a common group. Grouping allows users to perceive a large screen as consisting of smaller identifiable pieces. Spatial distance and shape coding are particularly powerful grouping techniques.

1. Grouping of information shall be accomplished by spatial distance, shape coding, lines, color coding or other means consistent with the application.

2. Displays with high information density shall have an intermediate number of groups. The preferred range for number of groups is 19-40.

c. Symbols - Coding by means of graphic symbols, shapes, or color shall be a key method used to communicate the specific meaning of an element of a display to a user. The choice of a symbol shall not contradict highly overlearned associations (e.g., the use of red as a symbol for stop or danger and the use of an octagonal shape for stop).

1. As a symbolic code, color shall be redundant with at least one other coding technique.

2. Users shall have access to the referent for every symbol.

9.6.2.7 Windows

{A}

9.6.2.7.1 Design Considerations for Windows

{A}

a. The default width for a generic window should cover from 67% to 100% of the full screen.

b. The default size for text windows should be at least four to seven lines of information. Beyond four to seven lines of information, the default window size should be a function of the amount of information to be displayed in the window.

c. Windows should have a rectangular shape. The window should be framed by a border of a single line. The frame should expand and contract with the window.

d. The title of a window should be positioned in a consistent and highly visible place (e.g., centered at the top of the window). The title should accurately and uniquely describe the contents of the window.

e. A variety of methods for maintaining a distinction between multiple active windows (and the inactive or closed windows associated with them) exists. The system might maintain a directory of windows, a schematic illustrating the relationship between windows, or a coding or highlighting system to identify windows in a hierarchy.

f. The Human-Computer Interface issues regarding use of multiple windows remains largely unexplored. Classification schemes other than those currently defined (open vs. closed, active vs. inactive) exist.

9.6.2.7.2 Design Requirements for Windows

{A}

a. Perceptual Characteristics of Windows - Windows are subdivisions of displays in which one functionally-related set of information is displayed. Windows shall be perceptuaaly distinct from the rest of the display.

b. Types if Windows - Users shall be able to distinguish among different types of windows based on the perceptual characteristics of the window. Window types can be organized in a hierarchy based on their function: Open vs.Closed windows, where thr user has perceptual and functional access only to the open window; Open windows can be Active or Inactive, where the active window contains an on-going activity; either user-maintained (e.g., a command language dialogue) or system-maintained (e.g., control of a Space Station Freedom subsystem by an expert system); Active windows can be an Interactive window (also known as the "listener") or a Non-interactive window, where the Interactive window is the one which user actions have their effect.

c. Window Titles - A brief, unique, and descriptive title shall be positioned in a conistent and highly visible location for each window. The user shall be able to use that title in accessing the window.

d. Multiple Windows - When multiple windows are open simultaneously, only caution & warning and task-relevant information shall overwrite the active window(s).

9.6.2.8 Format
{A}

9.6.2.8.1 Design Considerations For Format
{A}

a. Information Density - Information density should be held to a minimum in displays used for critical tasks.

b. Selectable data display - Only data essential to the user's needs should be displayed.

9.6.2.8.2 Design Requirements for Format
{A}

a. Consistency - Display formats shall be consistent within a system.

1. When appropriate for users, the same format shall be used for input and output.

2. Data entry formats shall match the source document formats when feasible and efficient for user performance.

3. Recurring data fields within a system shall have consistent names and shall have consistent relative positions within displays.

b. Standardization - The content of displays within a system shall be presentedin a consistent, standardized manner.

c. Information Density - A minimum of one character space shall be left blank vertically above and below critical information, with a minimum of two character spaces left blank horizontally before and after.

d. Selectable data display - The system shall permit the user to access any data at any time.

e. Readily Usable Form - Data presented to the user shallb e in a readily usable and readable form such that the user does not have to transpose, compute, interpolate, or mentally translate into other units, number bases, or languages.

f. Order and Sequences - When data fields have a naturally-occurring order (e.g., chronological), such order shall be reflected in the format organization of the fields.

g. Extended Alphanumerics - When five or more alphanumeric characters without natural organization are displayed, the cahracters shall be grouped in blocks of three to five characters, separated by a minimum of one blank space or other separating character, such as a hyphen or slash.

h. Comparative Data Fields - Data fields to be compared on a character-by-character basis shall be adjacent. Relative position shall maximize ease of comparison.

i. Labels and Title:

1. Each individual data group, message, or window shall contain a descriptive title, phrase, word, or similar identifier to designate the content of the group or message.

2. Labels and titles shall be located in a consistent fashion adjacent to their referent; the relation between the label or title and referent shall be clearly visible.

3. Labels and titles shall be emphasized to facilitate user scanning and recognition. The technique used for emphasis (e.g., highlighting, see Section 9.6.3.1.4a) shall be easily distinguishable from that used to highlight or code emergency or critical messages. Labels and titles shall not be confusable with data.

4. The physical features and wording of labels and titles shall be designed to avoid confusion as to whether the label is for a data entry field, a control option, a guidance message, or other displayed materials.

5. Labels and titles shall be unique to avoid confusions between labels.

6. When presenting a list of user options, the label shall be descriptive of the contents of the list and relevant to the task being performed by the user.

j. Identifying Location in Sequence of Displays - Cues shall be provided to the user to identify the currently displayed page and the total number of pages of a multiple page display (e.g., in a text file, the second page of a five page file might be labeled Page 2 of 5).

k. Abbreviations and Acronyms:

1. Information shall be displayed in plain concise text wherever possible.

2. Abbreviations and acronyms shall be standardized.

3. Abbreviations shall be distinctive to avoid confusion.

4. A single word shall have no more than one abbreviation.

5. No punctuation shall be used in abbreviations.

6. Where practical, definitions of all abbreviations, mnemonics, and codes shall be provided on-line at the user's request. If on-line capability is not provided, definitions shall be provided in hardcopy.

l. Number System - When numeric data are displayed or required, such data shall be in the decimal number system by default. Users shall have the ability to change the number system according to their task demands.

9.6.2.9 Information Display Rate

{A}

9.6.2.9.1 Design Considerations for Information Display Rate

{A}

a. The computer system should respond to user commands and requests in minimal time.

b. The variability of response times should be kept to a minimum. Response time deviations should not exceed more than half the mean response time (e.g. if the mean response time is 4 seconds, the variation should be limited to a range of 3 to 5 seconds).

c. A message should be displayed if response times are long and there is no indication to the user that the system is processing. Additionally, as the status of the system changes during a multiple-step task, the status message should change accordingly.

d. When the requirements of an operation-monitoring task dictate that current data changes be continuously viewed, the user should have the option of simultaneously viewing a freeze frame or "snapshot" and the continuous display.

9.6.2.9.2 Design Requirements for Information Display Rate

{A}

a. Information Display Rate - The information display rate shall not exceed human perception, comprehension, or response capabilities.

b. Update Rate:

1. The rate of update of information within a display shall be a function of both task requirements and user capabilities.

2. The rate of update of information shall not exceed the user's ability to perceive changes in values of parameters.

3. For slowly changing data, the system shall aid the user in attending closely to the display and in eliminating the need for extended fixation of the display.

4. Items requiring dynamic visual acuity on a graphic display shall not move faster than 60 degrees of visual angle per second, with 20 degrees per second preferred.

c. Display Freeze:

1. A display freeze mode shall be provided to allow close scrutiny of any selected display that is updated or advanced automatically by the system.

2. An option shall be provided to allow the user to either resume the update of information from the point at which the display was frozen or at the current real-time point.

3. An appropriate label or iconic symbol shall be provided to indicate to the user that the display is in the freeze mode.

d. System Response Time - Whenever possible, the time for the system to respond to a user command or request shall not exceed 2 seconds.

e. Keystoke Echo Response Time - Whenever possible, keystroke echo response time shall not exceed 0.1 second.

9.6.3 Real-Time Interaction

{A}

9.6.3.1 User-Computer Dialogues

{A}

9.6.3.1.1 Design Considerations for User-Computer Dialogues

{A}

a. All dialogue types should share a common framework, so that the user can learn the basic dialogue concepts and transfer those concepts between dialogue types.

b. Use - Direct manipulation should be the preferred dialogue techniques used for tasks.

9.6.3.1.2 Design Requirements for User-Computer Dialogues

{A}

a. Dialogue Type - The choice of the type of dialogue between the user and computer (e.g., command language, menus, data forms, direct manipulation) shall be compatible with user characteristics and task requirements. The human-computer dialogue for any task shall allow users to execute commands in terms of the functions to be performed without concern for internal computer data processing, storage, or retrieval mechanisms.

b. Multiple dialogues - To the greatest degree possible, users shall be able to input commands to the system using any of the available dialogue types and shall be able to switch between dialogue types within a task sequence.

c. User Viewpoint - User-computer dialogue techniques shall reflect the user's point of view such that the commands are logically-related to the user's conception of what is being done.

d. Feedback from commands:

1. When the completion of a command results in a consequence that is perceptible to the user, the completion of the commanded action shall be the only necessary feedback.

2. Rather than simply rejecting the entry, the system shall permit users to correct errors in commands, where feasible.

3. When the completion of a command results in a consequence that is not perceptible to the user, the system shall provide explicit feedback to the user that the command was completed. The feedback shall be in the form of a message that describes the actions that resulted from the command in simple, direct, positive language.

e. Arm-Fire Sequence for Critical Commands - Users shall have to confirm that they want to perform a critical, potentially hazardous, or potentially destructive command (includingd commands that would destroy stored data) before the system will execute it. The confirmation request from the system to the user shall be positive, simple, and direct.

9.6.3.1.3 Command Language

{A}

9.6.3.1.3.1 Design Considerations for Command Language

{A}

a. Command languages are the most concise, flexible and powerful of all dialogue types. The disadvantages are the training required to learn the correct commands and syntax, and the increased potential for errors.

b. Interpretation of the command language should not be affected by superficial characteristics of command statements such as letter case or spacing.

c. Users should be able to use a synonym for any command language term with minimal disruption of performance. Two approaches to the use of synonyms might be implemented; however, each approach has advantages and disadvantages.

1. The system might recognize and accept all probable synonyms for each keyword defined in the command language. Acceptable synonyms would be limited by the requirements of uniqueness and unambiguousness. An advantage is the ability to enter a wide variety of terms and have the system recognize and accept them, thereby reducing errors and saving time. A disadvantage is that users are generally inconsistent in their use of synonyms, either from time to time for a single person or across groups of people. Accordingly, acceptance of synonyms may create a tremendous burden for the system. In addition, accepting synonyms may increase the time required to learn the command language.

2. The system might recognize all probable synonyms for each keyword in the command language; but, rather than accepting the synonym, the system would provide the user with an error message which proposed the correct term. Advantages are that it may be less burdensome on the system and it would be more likely to help the user learn the command language. The major disadvantage is that error trials would be relatively time consuming.

d. Command Language Terms - To the greatest degree possible, the meaning of terms in the command language should correspond to English and be conveyed in a form such that additional resources are not required to interpret the message.

9.6.3.1.3.2 Design Requirements for Command Language

{A}

a. Use - All users shall always have access to the command language. Additionally, the command language is especially well suited for the following:

1. Tasks with an elaborate interaction between the user and system.

2. Highly trained, frequent system users.

b. Standardization - The functionality, design, and operation of the command language shall be standard. The standardization of the language shall include the lexicon, semantics, and syntax.

c. Command Language Terms - The terms in the command language shall describe actions or objects, and the attributes of actions or objects.

d. Command Language Syntax - The structure of the command language shall resemble the structure of English as closely as possible.

e. Distinctiveness - Command language terms shall be perceptually and semantically distinct from one another.

f. Punctuation - The command language shall contain a minimum of punctuation or other special characters.

g. Truncation - The user shall be able to enter the full command name or the system-specific truncated form. Truncated forms may consist of unique partial command terms, function keys, and command keystrokes.

h. Comman Area - Commands shall be entered and displayed in a standard command area in a consistent location on all displays.

i. Command Prompts - The user shall be able to request prompts, as necessary, to determine required parameters in a command entry.

j. Command Editing - Editing of commands shall follow the same rules as text editing.

k. Alternative Constructions - If users input alternativennonymous command language terms, the system shall aid the user in completing the command correctly.

l. Command recall - The user shall be able to easily recall a previously executed command, edit it, and then execute the edited version.

9.6.3.1.4 Design Requirements for Command Keystrokes

{A}

a. Uses - Command keystrokes (i.e., the use of a limited number of keystrokes combined with pressing a Command Key to access a command language term) shall be used primarily in cases where speed of command inputs is important. Other dialogue techniques shall be available, as appropriate.

b. Consistency across applications - The structure and meaning of keyboard commands shall be consistent across applications.

9.6.3.1.5 Design Requirements for Function Keys

{A}

a. Uses - Function keys shall command an action with a singular keypress and shall not require any other preceding or simultaneous keystroke (e.g., pressing a Command Key). Function keys shall be used for tasks with unique control entries or as an adjunct to other dialogue types for functions that occur frequently, that must be made quickly, and that must be made with minimal syntax errors.

b. Consistency across applications - The consequence of pressing a fixed function key shall be consistent across applications.

9.6.3.1.6 Menus
{A}

9.6.3.1.6.1 Design Considerations for Menus
{A}

a. Menus should be used when a user must select from several alternative options. The use of menus is beneficial for infrequent tasks, complex tasks or novice users. Depending on task and user requirements, menus can be fixed or user requestable (pull-down;pop-up).

b. Menus should be used when a command set is so large that users are not likely to be able to commit all of the commands to memory.

c. Menus are not the most efficient method of entering data and may prove too slow for experienced users.

d. Menus should be designed so that the function of the menu is evident to the user.

e. User-requested menus should be activated by only a specific user action (e.g., a press on the selection button). Menus should not appear simply because the cursor has passed over the menu title.

f. Menu items which are unavailable should be displayed, but made perceptibly different from the available items.

g. All menu items should be selectable by keyboard entry. The keystroke combination should be closely related to the menu item (e.g. the code might be the first letter of the option label). The keystroke combination should appear alongside the option label in the menu.

9.6.3.1.6.2 Design Requirements for Menus
{A}

a. Menu Item Selection:

1. The user shall be able to select a menu item with minimal activity.

2. When selection is to be accomplished by cursor placement on the to-be-selected item, the system shall aid the user in cursor placement. For example, for a permanent menu, the cursor would be placed on the most likely option, usually the first position.

3. Where design constraints do not permit cursor placement, a standard input area shall be provided for the user to key the selected option code.

b. Presentation of Menu Items - Menu items shall be presented in a list format. Each menu item, along with any associated information (e.g., selection codes and descriptors), shall be displayed on a single line.

c. Organization of Menu Items - Menu items shall be organized in a logical order (e.g., similarity of function, expected frequency of use, temporal ordering of the task). If no logical basis exists for ordering items, an alphabetical order shall be used.

d. Coding of Menu Items:

1. When users have the capability to select a menu item by means of a coded entry, the code associated with the menu item e display in close spatial proximity to the menu item.

2. Codes used to select menu items shall item so that users do not have to learn arbitrary codes.

3. If menu items are selectable by means of function keys, the arrangement of the function keys and menu shall be compatible.

e. Selectable Items Discriminable From Nonselectable Items - Menu items that are available to be selected by the user shall be visually different from menu items that are not available in a given application or step in a task.

f. Format Consistency - Menu formats shall be consistent throughout the system.

g. Menu Availability - Menus shall be readily available to the user at all times.

h. Movement Through Menu Hierarchies:

1. The user shall have the capability to traverse menu hierarchies forward and backward.

2. If several levels of menu hierarchy are presented, the user shall be able to move from one level to any other level without having to step through multiple menu levels.

3. The system shall provide visual cues that indicate the path that the user has travelled through a hierarchy of menus.

i. Feedback:

1. When a menu item is selected, an immediate indication that the intended item was selected shall be given. This indication shall not be confusable with other kinds of display coding.

2. When selection of a menu item results in a continuing condition (e.g., turning on a pump which stays on until commanded to be shut off), a visual indication, clearly associated with the specific menu item, shall be provided to the user during the time that the condition continues.

j. Types of Menus Menus shall be available either as permanent menus or as user-requested menus ("user-requresteed menus" are menus which are present only when the user specifically asks for them, e.g., pop-up or pull-down menus). The type of menu shall be a function of the task requirements.

9.6.3.1.6.3 Permanent Menus
{A}

9.6.3.1.6.3.1 Design Considerations for Permanent Menus
{A}

a. Permanent menus should not be removeable by the user.

b. There should be one standard design for the input prompt that is used for permanent menus across all applications, for example, "ENTER CHOICE:___". There should be a text prompt delimiter (e.g., a colon) as well as an underscored area representing the maximum input length.

c. The location of the prompt should be the same on all displays. This minimizes head/eye movement when the user is locating the appropriate key.

9.6.3.1.6.3.2 Design Requirements for Permanent Menus
{A}

Permanent menus shall be used when:

a. The user needs to see the menu items throughout a task.

b. The user needs to examine every option in detail.

c. The user does not have the ability to request that a menu be displayed (e.g., in the absence of a pointing device).

d. The use of a user-requested menu would obscure information needed for a task.

9.6.3.1.6.4 User-Requested Menus
{A}

9.6.3.1.6.4.1 Design Considerations for User-Requested Menus
{A}

a. Pull-down menus are generally used in conjunction with a menu bar (a specialized function area that displays categories of user response alternatives). A disadvantage of most current implementations (menu bar at the top of the display) is the travel time required to move back and forth to the menu bar.

b. Pop-up menus require some user action (e.g., the click of a pointing device button) to activate the display of the menu. A disadvantage of most current implementations is that the particular menu popped up depends upon the cursor location so the user must remember the arbitrary pairing of screen location and menu.

9.6.3.1.6.4.2 Design Requirements for User-Requested Menus
{A}

a. Use - User-requested menus shall be used when:

1. Display space is limited.

2. Users need to see the menu items only when selecting them.

3. Information required by the user would not be obscured by the menu.

b. Menu design:

1. The height of a menu bar (used to permit the user to request a menu) shall be sufficient to contain standard text characters which serve as the menu labels.

2. Menu labels on the menu bar shall be brief, descriptive of the contents of the menu, physically separated from other menu labels, and semantically distinctive from other menu labels.

3. Menu bars shall be placed in a consistent location in all displays.

4. The organization of categories across the menu bar shall be logical (e.g., according to function or frequency of use).

c. Activation - User-requested menus shall be displayed only after a single, specific action by the user. After the menu options' selection proce ss is complete, the menu shall revcert to its hidden state.

9.6.3.1.7 Direct Manipulation
{A}

9.6.3.1.7.1 Design Considerations for Direct Manipulation
{A}

a. In direct manipulation interfaces, the user's actions are direct and the results are clearly displayed (WYSIWYG; What You See Is What You Get). A system using direct manipulation usually contains a heavy visual component such as icons or pictorial representations that can be directly selected as commands to the computer system (e.g., an icon of a garbage can could be used for deleting files).

b. Two primary direct manipulation actions exist: selecting and dragging. Selecting should involve two steps: (e.g., (1) moving a pointing cursor to an icon or function area and (2) indicating to the system that the icon and its associated function are required through the performance of a specific, well-defined selection action by the user (e.g., "clicking" a control device cursor). Dragging should involve moving a selected icon or the cursor.

c. The consequences of dragging should be contingent on the nature of the object that is dragged and where the object is placed at the termination of dragging. For example, dragging a data file icon to a

"statistics" icon might cause the data to be analyzed; dragging the file icon to a disk icon might copy the file onto that disk; dragging with a drawing tool might draw a line; and dragging across text might mark the text for selection (a technique called "drag selection").

9.6.3.1.7.2 Design Requirements for Direct Manipulation

{A}

a. Philosophy of Direct Manipulation - In the direct manipulation interface, the user shall be able to manipulate data structures or objects directly by physically interacting with their graphical representation.

b. Features of Direct Manipulation - The direct manipulation interface shall have the following characteristics:

1. The objects of interest have continuous graphical representations (e.g., as icons and windows).

2. The users accomplish functions by means of physical actions with the objects instead of by language-based commands. Two primary physical actions are selecting an object and moving an object.

3. Operations are rapid, incremental, and reversible. The impact of an operation on the object of interest is immediately visible.

c. Use - Direct manipulation shall be among the dialogue techniques used for tasks.

1. Users have different languages.

2. The task objects and actions lend themselves to iconic representation.

3. Users are not highly practiced with the task.

9.6.3.1.7.3 Icons

{A}

9.6.3.1.7.3.1 Design Considerations for Icons

{A}

The visual features, meanings and specific uses of icons should be consistent within and between computer system applications. If users have to learn different associations between icons and the objects or actions that they represent for every different application or system, training times and errors will increase.

9.6.3.1.7.3.2 Design Requirements for Icons

{A}

a. Icon Design :

1. The icon shall pictorially represent the object or action. (An icon is a pictorial, pictographic, or other symbolic representation of a software object or an action by the system. A user's direct manipulation of the icon is equivalent to manipulating the software object or executing the system action.)

2. Icons shall be identifiable and discriminable.

3. Icons that the user can select shall be sufficiently large enough to minimize selection time and errors.

4. Icons shall be simple, closed figures.

5. Icons shall be accompanied by text labels which correspond to the term from the command language that describes the same object or action. The text label shall be clearly associated with the icon without obscuring the visual representation.

b. Consistency - Visual features, meanings, and specific uses of icons shall be consistent within and among applications.

c. Feedback - Selecting an icon shall be acknowledged by highlighting the icon in such a way that the icon is not visually obscured. The icon shall remain highlighted during the time that it is selected.

9.6.3.1.7.4 Design Requirements for Actions in the Direct Manipulation Interface

{A}

a. Movment and Selection - Users shall be able to move the pointing cursor to and select icons by the use of any available cursor control device (e.g., X-Y controllers and arrow keys).

b. Opening - shall be able to "open" a selected icon by a single unique action.

c. Inititating a Process - Users shall be able to initiate the process related to an icon (e.g., opening a file or launching an apnecting an object icon to an action icon; or selecting an icon and entering a command (e.g., via the command language, command keystrokes, or menu).

9.6.3.1.7.5 Interactions with Windows

{A}

9.6.3.1.7.5.1 Design Considerations for Interactions with Windows

{A}

a. Commands issued by the user should directly affect the interactive window.

b. Actions by the user should primarily affect the interactive window. However, actions in the interactive window may affect any other window (e.g., the user may use an inactive window as a display).

c. Window types should be perceptually distinct. Permitting changes in noninteractive and interactive windows must be done with great caution so that the changes are visible to the user in a layered window environment. For example, windows whose contents are changed by an action in another window might be brought to the front of the display.

d. Not all windows need necessarily have the full set of interactive capabilities. The capabilities present in a window should be a function of how the user will interact with the window. (For example, a window that simply presents a one-line status message might only need to have the ability to be closed.) It might not need to be resizable, movable, etc.

e. Users should have the capability to obtain information about any and all open windows. At a minimum, this information should include window name, type, and any process initiated through and displayed in that window.

f. The user should have the ability to scroll through the contents of a window both horizontally and vertically, if scrolling is required, or at any point in an application.

g. Users should be able to resize windows in two ways:

1. Resizing which does not change the size of the window contents.

2. Resizing in which the size of the window contents increases or decreases with the changes in the size of the window.

h. When resizing windows, maintain line lengths of 52 to 78 characters for continuously scrolling text. These line lengths have been found to produce the fastest performance.

i. Use windows which provide at least four lines of text. Windows sized smaller than this degrade performance.

j. When there are multiple windows, techniques to manipulate them include:

1. "Tiling" in which multiple windows on the same display abut, however do not overlap.

2. "Layering" in which multiple windows overlap and obscure the contents of the covered windows. As the number of windows increases in the tiled window environment, the sizes of the windows generally decrease. The window maintenance required in a layered environment generally increases time to complete a task. Thus, the choice of a windowing technique depends upon the task.

k. Users should have the capability to select between "tiling" and "overlapping" window environments.

l. In a layered window environment users should have the capability of moving a window to the front of or behind any or all other windows.

m. When a tiled window environment results in windows of a size that would reduce the user's ability to use the information in the window, a layered window environment should be employed. The layered windows can overlap and should be the default window size until resized by the user.

n. Users should have the ability to move tiled windows so that they overlap.

9.6.3.1.7.5.2 Design Requirements for Interactions with Windows

{A}

a. Control Over Window Dimensions- Users shall be able to change the horizontal and vertical dimension of windows independently by direct physical action on the window.

b. Control Over Window Location - Users shall be able to move windows to different locations on a display by direct physical action on the window. However, users shall not be able to move a window where it interferes with the user's ability to interact with the system or with caution and warning information.

c. Opening and Closing a Window - Users shall be able to open or close a window by direct physical action on the window.

d. "Popping" Windows - In a layered windowing environment, users shall be able to move a window in a stack to the prominent position in the stack so that its contents are visible (known as "popping" the window to the front).

9.6.3.1.8 Data Forms/Form Filling

{A}

9.6.3.1.8.1 Design Considerations for Data Forms/Form Filling

{A}

a. Forms should be used for tasks in which the user must make several data or control entries in a single step (e.g., choosing multiple control parameters).

b. Forms should be used for tasks in which the computer response time is slow.

9.6.3.1.8.2 Design Requirements for Data Forms/Form Filling

{A}

a. Use - The primary uses of data forms shall be for data entry and computer command tasks in which information needed by the user is displayed and the user has to complete a form.

b. Grouping - Displayed forms shall be arranged related items are grouped together.

c. Format and Content Consistency - If paper forms and computer-displayed forms are used in concert in a data entry task, the format and content of the two types of forms shall be compatible, within the constraints of the task and the differences in information format.

d. Distinctiveness of Fields - Fields or groups of fields shall be separated by lines or other delineation cues. Required fields shall be distinguished from optional fields.

e. Field Labels - Field labels shall be distinctively presented such that they can be distinguished from both data entry fields and data entered by the user. Labels for data entry fields shall incorporate additional cueing of data format where the entry is made up of multiple inputs [e.g., TIME (HH/MM/SS):(__/__/__)].

f. Cursor Placement - When the form is displayed, a displayed cursor shall be positioned by the system at the first data entry field to which the user has to provide input. Tor to the next datapleted entry of the current field. The user shall also have the ability to move the cursor to the next field, to the previous field, or, independently, to any field on the form.

g. Actions for Movement and Completion - Distinctly different actions shall be used for:

1. Movement of the cursor forward to the next field.

2. Movement backward to a previous field.

3. Placing the cursor in a noncontiguous field.

4. Indicating that the input to the form is completed.

h. Entry Length Indication - The maximum acceptable length for variable length fields shall be indicated on that field. However, when the item length is variable, the user shall not have to remove unused underscores.

i. Overwriting - When data entry by overwriting a set of characters in a field is used, clear designation of overwritten characters , by reverse video) shall be provided.

j. Dimensional Units - When a consistent dimensional unit is used in a given entry field, the dimensional unit shall be provided and displayed by the system.

k. User Omissions - When required data entries have not been input, the omission shall be indicated to the user, and either immediate or delayed input of the missing items shall be allowed. For delayed entry, the user shall be required to indicate to the system (e.g., by entering a special symbol in the field) that the missing item is delayed, not ovrlooked.

l. Non-Entry Areas - Non-entry (protected) areas of the display shall be designated. In the absence of authorization of the user, those areas shall be made inaccessible.

m. Prevent Entry of Inappropriate Characters - An attempt to enter an inappropriate character into a field (e.g., entering an alphabetic character into a field reserved for entry of numeric characters) shall result in feedback from the system (e.g., an auditory signal and/or an error message).

9.6.3.1.8.3 Design Requirements for Default Values for Data Forms

{A}

a. Default Values - Default values shall be used to redukload. Currently defined default values shall be displayed automatically in their appropriate data fields with the display of a form.

b . Default Modification - The user shall have the capability of changing default values and having those modifications retained by the system beyond that user interaction or session (i.e., until changed by another specific user action).

c. Default Substitution - The user shall be able to replace any default value during a given transaction without changing the default definition.

d. User Confirmation - If required, user acceptance of stored data or defaults shall be possible by a single confirming keystroke.

9.6.3.1.9 Question and Answer
{A}

9.6.3.1.9.1 Design Considerations for Question and Answer
{A}

Question and answer dialogues should be used when computer usage is infrequent and/or when users have received minimal training.

9.6.3.1.9.2 Design Requirements for Question and Answer
{A}

a. Use - The uses for question and answer dialogues shall include:

1. Highly constrained tasks in which each step of the task sequence has few choices available.

2. Routine data or command entry tasks in which the user needs explicit prompting.

b. Structure:

1. The system shall provide the user with a specific request for information. A question mark shall be the delimiter of the question from the system.

2. The system shall provide the user with contextual information (e.g., units of measurement used in the answer) required for answering the question.

3. The area in which the user can enter the answer shall be provided following the question as closely as possible.

4. The system shall accept as much information as is provided by the user. If the by the user is to be severely limited, a data form shall be used.

5. The system shall display related questns (and their associated answers) simultaneously. Unrelated questions (and their associated answers) shall be displayed separately.

9.6.3.1.10 User-definable Macros
{A}

9.6.3.1.10.1 Design Considerations for User-definable Macros
{A}

The human-computer interface issues regarding user-definable macros remain largely unexplored. One of the critical issues concerns the trade-off between the convenience and the user interface customization provided by macros and the disruption of commonalty introduced by macros.

a. Advantages of macros include:

1. The grouping of sequentialentries, which may reduce out-of-sequence or forgetting errors.

2. A more rapid means of making dialogue entries.

3. Increased flexibility.

b. Disadvantages of macros include a reduction of commonalty leading to:

1. Confusion errors.

2. Miscommunications among users.

9.6.3.1.10.2 Design Requirements for User-definable Macros
{A}

a. The system shall allow the user to group related or sequential control or command entries into one operation known as a user-definable macro.

b. The system shall not allow users to define system-level macros (i.e., macros that can be used across two or more applications). System level macros shall be defined only by software developers.

c. The system shall povide to the user a macro-defining option which would impose a common syntax on all command strings within macros.

d. The system shall prohibit a user from modifying a macro that was defined by a different originating user.

e. When a user creates a macro, the system shall not allow a user to duplicate macro names.

f. The system shall provide users with access to an index of macros and each macro's command listing.

9.6.3.2 Design Requirements for Movement Within User Interfaces

{A}

a. Users shall be able to move the locus of their input or attention within a display by means of a pointing cursor. A placeholding cursor shall be available for location of placement in a display used for input of alphanumeric characters.

b. Users shall be able to move displayed information from the same data file by scrolling (i.e., the continuous vertical or horizontal movement of displayed information) and paging (the discrete movement from one "page" to another in an information display).

c. Users shall be able to locate and move to specific information in a data file.

9.6.3.2.1 Design Requirements for Position Designation (Cursor)

{A}

a. Control - Systems employing cursors shall provide cursor control capability consistent with user speed and accuracy requirements.

b. Locating - All cursors shall be distinctive against all backgrounds and shall be easy to locate at any position on a display.

c. Tracking - The cursor shall be easy for the user to track as it is moved through the display.

d. Distraction - The cursor shall not distract or impair the user during the search of the display for information unrelated to the cursor.

e. Data Entry - An "enter" action for data items shall result in the entry of all appropriate items (e.g., all data input to a data form or all text written in a text file) regardless of the placement of the cursor. The user shall not be required to move the cursor to any arbitrary position on the display (e.g., the top left or bottom right of the display).

f. HomePosition - The home position for the cursor shall be consistent across similar types of displays.

g. Unique Shape - The shapes used for cursors shall be unique with respect to all other display structures. Cursors of different shapes shall be used for different purposes; the relation between a cursor shape and function shall be consistent across applications.

h. Types of Cursors - Users shall have access to two functionally different types of cursors -- a pointing cursor and a placeholding cursor.

9.6.3.2.1.1 Design Requirements for Pointing Cursor

{A}

a. Display Priority The pointing cursor shall be available to the user at all times. The pointing cursor shall obscure other characters unless this would interfere with user performance.

b. Visual Characteristics:

1. The pointing cursor shall not blink.

2. The pointing cursor shall maintain its size and image quality across all screen and display locations.

3. To the greatest degree possible, the pointing cursor shall be completely graphic and shall not contain a label.

c. Gross Movement:

1. The movement of the pointing cursor shall be systematically related to the movement of the cursor control device (e.g., a trackball, a joystick, a mouse, or cursor control keys).

2. The pointing cursor shall not move in the absence of input from the user.

3. The movement of the pointing cursor shall appear to be smooth and continuous with smooth and continuous movement of the cursor control device.

d. Fine Positioning - When fine positioning accuracy is required, the displayed cursor shall include an appropriate point designation feature (e.g., crosshairs).

9.6.3.2.1.2 Design Requirements for Placeholding Cursor

{A}

a. Non-Interference - The placeholding cursor shall not interfere with the reading of the character that it marks.

b.. Number of Placeholding Cursors - There shall be one and only one placeholding cursor in each window in which a user is entering alphanumeric characters.

c. Visual Characteristics:

1. The placeholding cursor shall assume e height or width of the alphanumeric characters adjacent to it.

2. If the placeholder cursor blinks, the default blink rate shall be 3 Hz. A user-selectable blink rate shall be within the range of 3 to 5 Hz.

9.6.3.2.2 Design Requirements for Scrolling

{A}

a. Method of Scrolling - Users shall be able to scroll by only one method within an application - either by "moving text" (i.e., the information in the display appears to move over a fixed display window) or by "panning" (i.e., a window appears to move over a fixed display of information. Panning shall be the preferred method.

b. Scroll Rate - The scroll rate shall allow the user to scroll in an increment of a line and shall provide the appearance of a smooth flow of text.

c. Direction of Scrolling - The direction that a user may scroll shall be evident before the user begins the scroll action (e.g., arrows might point in the direction that corresponds to the direction that scrolling will occur).

d. Numbering - Items continued on the next page (scrolled to) shall be numbered relative to the last item on the previous page.

9.6.3.2.3 Design Requirements for Paging

{A}

a. User Control - Users shall have control over paging by use of any of several

methods (e.g., dedicated paging function keys and a display-based paging icon).

b. Paging Increments - Users shall be able to move in increments of one or multiple pages.

c. Page Numbering - Each page of a multiple page display shall be numbered to identify the currently displayed page and the total number of pages.

d. Direction of Paging - The direction that a user may page shall be evident before the user begins to page (e.g., separate, labeled function keys might be used for paging forward and paging backward).

9.6.3.2.4 Design Requirements for Searching

{A}

a. Objects of Search - Users shall be able to search for and move to :

1. A specific line number.

2. A literal string of alphanumeric characters.

b. Multiple Occurrences - Users shall be able to find multiple occurrences of a literal string.

9.6.3.2.5 Hypertext

{A}

9.6.3.2.5.1 Design Considerations for Hypertext

{A}

Hypertext is a data retrieval, data input, and data management structure in which nodes of data are joined by links. As a method of gaining non-linear access to electronic information, Hypertext has a function similar to methods of non-linear access to hardcopy data. Hypertext nodes and links may be accessed through either browsing or authoring. In browsing systems users may search through a database to obtain information contained in the nodes, but may not alter this information. Authoring systems allow the user to create, modify or eliminate nodes, links and information.

a. Hypertext technologies are relatively new, and thus the user interface issues have not been fully documented.

1. Advantages include:

a) The organization of data into linear, non-linear and hierarchical structures which makes information retrieval and/or modification fast, easy and thorough.

b) Flexibility in that the same node can serve multiple purposes, increasing document customization and reducing redundancy.

2. Disadvantages include:

a) The loss of context (e.g., users may get "lost" in the complex structure.

b) The reliance on the untested basic assumption that the non-linear organization of data facilitates thinking and reading.

b. Hypertext tools should always have a context-sensitive help function, including an overview function that displays the entire hierarchy and a history function which tells the user which paths have been travelled.

c. Hypertext tools are not appropriate for editing tasks or tasks which are performed more poorly under interruption.

d. Hypertext browsing tools may be most appropriate for procedures that are complex and likely to be non-linear.

e. Hypertext authoring tools may be most appropriate for restructuring or organizing information, for tasks that aren't well structured, and for tasks that can be divided into relatively small components.

9.6.3.2.5.2 Design Requirements for Hypertext

{A}

Users shall onl have access to authring tools (i.e., tools that allow users to create modify, or delete the representation of information or links between information) if they need to have the power of those tools. Users that only need to browse (i.e., search through a database to obtain information contained in the nodes by following links between nodes), shall not have access to authoring tools.

9.6.3.3 Design Requirements for Manipulating Data

{A}

Data Manipulation - The user shall be able to manipulate data without concern for internal storage and retrieval mechanisms of the system.

9.6.3.3.1 Editing

{A}

9.6.3.3.1.1 Design Considerations for Editing

{A}

a. The user should be able to edit tables and graphics by multiple methods (e.g., by use of editing commands in the menu, commands and command keystrokes). All editing procedures should be consistent in the dialogue structure and syntax, independent of the type of information being edited.

b. The user should have the ability to change the physical characteristics of text. Example physical characteristics to put under the user's control include font type, size, capitalization; the ability to change the font style (e.g., by underlining, italicizing, and/or bolding characters), and/or to alter tab position in any part of a text file.

c. Users may need to have a double page size or the equivalent of a 14 x 17 page.

9.6.3.3.1.2 Design Requirements for Editing

{A}

a. Use - Users shall be able to edit only selected data files (e.g., files that they create and files specifically designated as read/write). Certain files shall be uneditable by the user. Editable files shall be clearly distinguishable from noneditable files.

b. Methods - For all editable files, the user shall be able to edit text, tables, graphics, and any other data by means of any of several methods (e.g., command language commands, command keystrokes, and menus).

c. Consistency of Procedures - All editing procedures shall be consistent in dialogue structure, independent of the type of information being edited.

d. Modifying Physical Features:

1. The user shall have the ability to change the physical characteristics of text (e.g., the font type and size, italics, underlining, boldness, and capitalization).

2. The user shall have the ability to set and modify the tab position for user-modifiable text files.

3. The user shall be able to set and modify the margins for user-modifiable text files.

e. Insert Mode vs Overstrike Mode - By default, the text editor shall operate in insert mode. Text shall be inserted moving to the right. However, the user shall be able to select text to be overstriken.

f. Selecting Data:

1. Users shall be able to select any editable data in any type of displayed data file (including text, tabular, or graphical) for specific editing functions (e.g., cutting, deletion, copying) with no more than two actions.

2. The selected data shall be visually distinct from non-selected data.

3. Users shall be able to remove selected data from the selected state with a single action.

g. Cutting Data:

1. Users shall be able to remove any editable data from a displayed data file by means of a "Cut" capability.

2. After the data are removed, the text or tabular display shall be reconstituted without a gap where the data were cut. Graphical displays shall be reconstituted with a gap where the graphical data were removed.

3. Users shall be able to place data that was most recently cut at any unrestricted location in any data file. Certain locations may be restricted from insertion of cut (or copied) data (e.g., menus or the system-originated parts of data forms).

h. Copying Data - Users sh be abta and replicate it at any unrestricted location in any data file.

i. Deleting Data - Users shall be able to deleteusly-selected data by simple actions ifferent from other editing functions (e.g., a dedicated "delete" command or function key).

1. Deletion of data shall be reversible for a limited period.

2. Deletion of critical data shall be protected by use of an "arm-fire" sequence, in which the user has to acknowledge that the system should delete the data.

9.6.3.3.1.3 Design Requirements for Graphics Editing

{A}

a. Editing Objects - Selection of a graphical object for editing shall be a function of the type of object: Icons shall be selected as a whole object; partial selection shall not be permitted for icons. For editable schematics, maps, flowcharts, data graphs and pictures, users shall be able to select for editing any object within the graphical display.

b. Moving - Users shall be able to move a previously selected object from one position on a display to another. An indication of the path of movement shall be provided to the user during the move.

c. User shall have te ability to increase and decrease the size of graphical objects that have previously been selected.

d. Users shall be able to rotayte objects taht have previously been selected. Users shall be able to rotate objects clockwise or counterclockwise. An indication of the path of rotation shall be provided to the user.

9.6.3.3.2 Saving

{A}

9.6.3.3.2.1 Design Considerations Saving

{A}

9.6.3.3.2.2 Design Requirements for Saving

{A}

a. Saving Data - The user shall have the save data entered into an editable data file:

1. While continuing to interact with that file .

2. While simultaneously exiting from that file. Two different simple actions shall be used for these two different types of saving data.

b. Exiting a File - The user shall be able to exit a file at any time without saving the changes to the file.

9.6.3.4 Design Considerations for User Guidance

{A}

Users sometimes need for the system with which they are working to guide them through their task. User guidance does not simply provide feedback about user errors, but also includes all feedback from the system that indicates the actions that are available to the user.

9.6.3.4.1 Design Requirements for Consistent Terminology

{A}

Consistent Terminology - On-line documentation, off-line documentation, and help instructions shall use consistent terminology.

9.6.3.4.2 User Feedback

{A}

9.6.3.4.2.1 Design Considerations for User Feedback

{A}

a. If the completion of the action commanded has a result that is visible to the user, feedback should be communicated by the completion of the commanded solution. If the completion of the command has no visible result, feedback should be communicated by a message.

b. The system should acknowledge a command that cannot be completed by a message indicating non-completion of the command and an appropriate error message.

c. The system should permit users to correct errors in command language rather than simply rejecting the command. The command in error should be displayed so that the user can correct and reenter it. Where possible, the incorrect portion of the command should be highlighted. Capabilities available for command revision within the command language should be consistent, in terms of user actions, with those used in other text editing functions in the system. However, the user should have the option of replacing the command with any other command.

d. During immediate execution mode, if the execution of a command statement will have adverse consequences, such as permanent loss of data, the command language should request confirmation prior to execution. The request should include a statement as to the exact nature of the consequences of executing the command statement.

9.6.3.4.2.2 Design Requirements for User Feedback

{A}

a. Use - Clear and corovide status information throughout the interaction.

b. Function Status - Feedback shall indicate actual function status.

c. Standby - If a system process (or processes) is time-consuming and causes the screen and input devices to be locked out, a progress message shall be displayed and updated, if possible, advising the user of the time remaining for the task or of the percentage of the task completed.

d. Process Outcome - When a control process or sequence is completed or aborted by the system, positive indication shall be presented to the user concerning the outcome of the process and the requirements for subsequent user action.

e. Input Confirmation - Confirmation of user input shall occur without removing the data display.

f. Highlighted Option Selection - Highlighting of data, a message, a menu item, an icon, or other display structure shall be used as feedback by the system to acknowledge that the user has selected the item.

g. User Input Rejection - If the system rejects a user's input, feedback shall be provided to indicate :

1. The reason for rejection.

2. The required corrective action.

3. Where appropriate, the location of the problem.

9.6.3.4.3 System Status Messages
{A}

9.6.3.4.3.1 Design Considerations for System Status Messages
{A}

a. Status messages that inform the user of an impending shut down of the system should interrupt the user's task-related interaction with the system.

b. Messages that inform the user of an important and timely but non-catastrophic event for the system should provide a unique signal, while not interrupting the user's ongoing interaction.

c. Status messages that are not timely should provide a unique signal that will not interrupt the user's ongoing interaction.

d. The system should automatically provide users with information about the current system status as it affects their work.

e. Status messages should be timestamped and users should have the capability to view messages by timestamp.

9.6.3.4.3.2 Design Requirements for System Status Messages
{A}

a. Operational Mode - The system shall inform the user of the current operational mode when the mode might affect the user's actions.

b. System Changes - The system shall inform users about system design or system operation changes only in those aspects that may affect the user's interaction with the system.

c. Characteristics of Status Messages:

1. Status messages shall be provided to the user in a consistent location on the display.

2. The message shall contain only the information needed by the user, and conveyed to the user in a form such that additional resources are not required to interpret the message, e.g.:

a) A description of the system state.

b) Directives for user action.

c) The consequences, if any, of failing to follow the directives.

3. If the user will not be able to look at a display, the message shall be presented by means of a voice production system and shall be repeatable.

4. If the user needs to be alerted that a status message is being displayed, status messages shall be accompanied by a consistent auditory signal. The auditory signal shall be redundant with the linguistic message.

9.6.3.4.4 Design Requirements for Error Handling

{A}

a. Error Correction - The system shall provide users with a simple and easy capability to correct errors in input. Users shall be able to correct individual errors in a command string, sequence of commands, or data file by replacing only the erroneous input without having to re-enter correct input.

b. Early Detection - A capability shall be provided to facilitate detection and correction of errors before they are entered into the system. In order to avoid disrupting the user, error checking shall occur at the earliest logical break in the user's command or data input (e.g., at the end of a data field or the end of a command).

c. Timing of Feedback - If a user makes an incorrect command or data entry, the system shall detect the error and notify the user within two seconds from command or data entry.

d. Internal Software Checks - User errors shall be minimized by the use of internal software checks of user entries for the validity of the item, the sequence of entry, completeness of the entry, and the range of the value.

e. Error Message Content:

1. Error messages shall be informative, brief and conveyed to the user in a form such that additional resources are not required to interpret the message.

2. The error message shall be self-contained: The user shall not have to refer to external documents in order to interpret the error message.

3. The error message shall be constructive and neutral in tone, avoiding phrases that suggest a judgment of the user's behavior.

4. To the greatest degree possible, the error message shall reflect the user's need for information and concept of the system, not those of the person who develops the message.

5. Error messages shall be appropriate to the user's level of training and shall be as specific as possible to the user's particular application.

6. Error messages shall explicitly provide as much diagnostic information and remedial direction as can be inferred reliably from the error condition.

f. Error Recovery and Process Change - The user shall be able to stop a process at any point in a sequence as a result of an indicated error. The user shall be able to return easily to any step in a multi-step process in order to nullify an error or to effect a desired change.

g. Correction Entry and Confirmation - When the user enters correction of an error, such corrections shall be implemented only by an explicit action by the user (e.g., actuation of an "Enter" key). All error correction by the user shall be acknowledged by the system, either by indicating that a correct entry has been made or by another error message if an incorrect entry has been made.

h. Spelling Errors:

1. Spelling and other common errors shall not produce valid system commands or initiate transactions different from those intended.

2. When possible, the system shall recognize, but not execute, common misspellings of commands. Computer-corrected commands, values, and spellings shall be displayed and highlighted for user confirmation prior to execution.

i. Errors in Stacked Commands:

1. To prompt for corrections of an error in stacked commands, the system shall display the stacked sequence with the error highlighted.

2. procedure shall be provided to correct the error and tack.

j. Location of Error Messages - Error messages shall be placed on the display close to the point of the error and/or in a designated, consistent area of the display.

9.6.3.4.5 Prompts

{A}

9.6.3.4.5.1 Design Considerations for Prompts

{A}

a. The system should provide prompts for the next sequential rigid test procedure in a task sequence. For example, if a STEP key should be pressed after the completion of a step in a task, the message area should display "Press STEP key to continue."

b. The system should provide prompts for entering data or command language inputs.

c. The location for data form prompts should be at the location of the required data. The location for prompts for data or commands on other types of displays should either be at the location of the data or command or in the message area.

d. If a prompt requires an input, as many features of that input as possible should be specified as part of the prompt. For example, the required input might be indicated by the use of a colon followed by underlining that extends for as many spaces as the input, as well as any necessary punctuation. For example, a prompt requesting the input of a date should be, "Please list the date of Event A (DD/MM/YY):__/__/__".

9.6.3.4.5.2 Design Requirements for Prompts

{A}

a. Use - Where appropriate, prompts and help instructions shaol be used to explain commands, error messages, system capabilities, display formats, procedures, and steps in a sequence

b. Standard Display - The location of prompts for data or commands shall be at the location of the desired input whenever possible. When the prompt cannot be placed at the location of the input, it shall be located in a standard message area.

c. Prompt Language:

1. Prompts shall be explicit, and the user shall not be required to memorize lengthy sequences or refer to secondary written procedural references.

2. Prompts shall be conveyed to the user in a form such that additional resources are not required to interpret the message. They shall not require reference to coding schemes, external documentation, or conventions which may be unfamiliar to occasional users.

9.6.3.4.6 On-Line Instruction

{A}

9.6.3.4.6.1 Design Considerations for On-Line Instruction

{A}

a. At the user's request, the Help function should provide the user with an index of command language commands that lists,

at a minimum, the full language command, any associated keystroke command or abbreviation, and any associated menu-based command.

b. The Help function should include information about system design and system operations that affect the users' interactions with the system.

c. The user should be able to access on-line documentation and descriptions of procedures.

d. Consideration should be given to displaying documentation and procedural data in a flowchart format. Evidence exists which suggests that flowcharts are more easily scanned for information.

e. When procedures must be displayed in a text format, the system should provide the user with contextual information indicating the current procedural step.

9.6.3.4.6.2 Design Requirements for On-Line Instruction

{A}

Access to ON-Line Documentation - Users shall have access to on-line documentation and descriptions of procedures.

9.6.3.4.7 On-Line Help

{A}

9.6.3.4.7.1 Design Considerations for On-Line Help

{A}

a. The design of the Help function should be consistent with system security restrictions.

b. The system should provide help to users both on request and, in certain conditions, automatically. A condition for automatic help might be frequent errors in a specific interaction with the system. However, users should be able to limit automatically - presented help displays with a single action.

c. Users should have multiple methods of requesting help. For example, a user might:

1. Select Help in a pull-down menu.

2. Type a "Help" command.

3. Press a Help Function key.

d. Users should be able to access Help at any point in their interaction with the system, including prior to logging on to the system, within the system security guidelines. Users should be able to access and read from the Help database as a form of on-line instruction about system functions and operating procedures.

e. A Help request from the user should elicit a task specific and context sensitive response from the system.

f. If the task in which the user is engaged cannot be identified unambiguously, the system should query the user to specify the data, message, menu item, or command that resulted in the request for help.

g. The Help Function should be displayed to the user in text and/or annotated graphics, as is appropriate to the topic on which Help has been requested. The text should be in simple sentence structure with proper punctuation. The text should be concise and should directly address the topic without digression.

9.6.3.4.7.2 Design Requirements for On-Line Help

{A}

a. Access to Help at Any Point in a Transaction - Users shall be able to access the Help function at any point in their interaction with the system. Access of help shall be by any of several methods, including

1. Help provided automatically by the system when users make repeated frequent errors.

2. Input of a command language request for help.

3. Actuation of a "help" function key.

4. Selection of a help option in a menu.

b. System Response to Help Request - A help request from the user shall elicit a task specific and context sensitive response from the system.

c. Levels of Help - The Help function shall provide information at a level of detail that matches the needs of the user. The user shall first receive summary information about the requested topic, then can request for additional detailed information in a specific subtopic or subtopics.

d. Definitions Available - A dictionary of abreviations, acronyms, and codes shall be available through the Help function, where feasible. Definitions of allowable options and ranges of values shall be displayed at the user's request where feasible.

e. Help about User Dialogues - At the user's request, the Help funciton shall provide the user with basic information about the semantics and syntax of any available user dialogue. Basic information shall include a structured listing containing each command, the associated keystroke commands and menu options, and the uses or consequences of the command.

f. Language of Help Messages:

1. Help messages shall be explicit, and the user shall not be required to memorize lengthy sequences or refer to secondary written procedural references.

2. Help messages shall be conveyed to the user in a form such that additional resources are not required to interpret the message.

3. Help messages shall not require reference to external documentation.

9.6.3.5 Design Requirements for Sequence Control

{A}

a. Hierarchical Process:

1. When hierarchical levels are used to control a process or sequence, the number of levels in depth in the hierarchy shall be minimized.

2. Display and input formats shall be similar within levels, and the system shall indicate the current positions within the sequence at all times.

3. Where it is appropriate for an experienced user to skip levels in a hierarchy, this capability shall be built in.

b. Interrupt:

1. User interrupts, processing aborts , and processing resumptions shall be allowed by the system. These actions shall not be .

2. The users shall be able to leave the system and store their work so that, on reentry at a later date, they can resume where they left off.

9.6.4 User Input

{A}

9.6.4.1 Design Considerations for User Input

{A}

a. Control ratios and dynamic features of all input devices should permit the user to perform both rapid, gross positioning and smooth, precise, and fine positioning

movements.

b. Independent of control device and monitor type, movement across the display should be smooth and continuous.

c. Selectable items or regions should be, at minimum, 5 mm on a side, but should not be so large that they waste screen space. Larger selectable items or regions may not be perceived as selectable.

d. Selectable items should be separated by at least 3 mm.

e. When the user is required to return to the origin or other specific screen location following an entry or read-out, automatic return of the cursor should be provided.

f. With multiple displays the location of the active cursor must be obvious to the user.

9.6.4.2 Design Requirements for User Input

{A}

a. Consistent Consequences of any user input shall be consistent:

1. For any individual user across time .

2. From user to user.

b. Relation of Input to Consequences - the consequences of the user's input shall be both logically and temporally linked to the input action so that the user can learn to predict what will happen following the input action.

c. Onput via a Variety of Devices - System design shall not impose on the user the use of a specific input device when other devices are available and appropriate. However, users shall not be required to switch among multiple devices to perform the same function within a task.

d. Computer Failure - In the event of computer failure, the program shall allow for orderly shutdown and establishment of a check-point so restoration can be accomplished without significant loss of computing performed to date.

9.6.4.3 Design Requirements for Data Entry Design

{A}

a. Learning - The requirements to learn mnemonics, codes, or acronyms are used to shorten data entry, they shall be distinctive and have a relationship or association to normal language or specific job related terminology.

b. Abbreviations, Mnemonics, Codes, and Acronyms - When abbreviations, mnemonics, codes or acronyms are used to shorten data entry, they shall be distinctive and have a relationship or association to normal language or specific job related terminology.

c. Length of Data Entries - The length of individual data items that are part of a required data input shall not be longer than is practicable, (e.g., difficult to remember while typing or tedious to edit).

d. Data Entry Rate - Data entry shall br paced by the user, depending on the user's application, criticality of the operation, and attention span, rather than by the system.

e . System Acknowledgment of Data Entry - The system shall provide a positive feedback to the user indicating the acceptance or rejection of a data entry and shall indicate to the user processing delays of more than 15 seconds.

f. Explicit Completion Action - Data entry shall require an explicit completion action, such as the depression of an ENTRY key after a string input.

g. Validation - Data entries shall be validated by the system for correct format, legal value, or range of values. Where data is entered inge of values, the entire data set shall be validated upon its completion.

h. Input Units - Data shall be entered in units which are familiar to the user.

i. Software-Availired to enter data already available to the software.

j. File Names - Names of files shall be distinctive and descriptive of the contents of the files to aid in locating files and deterring accidental selection or deletion of files which have similar names.

k. Originator Identification - For reference, the system shall automatically associate the originator of a data file , text file, or message with the file's name.

9.6.4.4 Design Requirements for Interactive Control

{A}

a. Simplicity - The relationship between data entry and displays shall be straightforward and explicit. Data entry actions shall be simple and direct.

b. Accidental Actuation - Provision shall be made to prevent accidental actuation of potentially destructive control actions, including the possibility of accidental erasure or memory dump.

c. Compatibility with User Skill, User Tasks - Controls for data entry shall accommodate the lowest anticipated user skill level.

d. Availability of Information - Information necessary to select or enter a specific control action shall be available to the user when selection of that control action is appropriate.

e. Minimized Keying - The amount of keying required shall be minimized by using numbered lists and abbreviations.

f. Physical Characteristics of Selectable Items - Selectable items or regions shall not be so large that they waste screen space or may not be perceived as selectable.

g. Multitasking/Multimonitor Considerations - In a multitasking environment with multiple monitors, controllers, or cursors, the location of the activer cursor shall be apparent to the user. If there are two pointing cursors -- one on each of two monitors -- the active cursor shall be apparent to the user. If there is a single cursor that moves between two monitors, its path shall be continuously trackable.

h. X and Y Outputs - With the exception of arrow keys other discrete step controllers, an XY controller shall be able to produce any combination of x and y output values.

i. X-Y-Z Control Outputs - With the exception of arrow keys or other discrete step controllers, an XYZ controller shall be able to produce any combination of x, y and z output values.

Table of Contents **Page**

10.0	**ACTIVITY CENTERS**	**10-1**
10.1	**INTRODUCTION**	**10-1**
10.2	**PERSONAL HYGIENE**	**10-1**
10.2.1	Introduction	10-1
10.2.2	Personal Hygiene Design Considerations	10-1
10.2.3	Personal Hygiene Design Requirements	10-2
10.2.3.1	Partial Body Cleansing Design Requirements	10-3
10.2.3.2	Whole Body Cleansing Design Requirements	10-3
10.2.3.3	Oral Hygiene Design Requirements	10-4
10.2.3.4	Hair Cutting Design Requirements	10-4
10.2.3.5	Grooming and Shaving Design Requirements	10-5
10.3	**BODY WASTE MANAGEMENT SYSTEM**	**10-5**
10.3.1	Introduction	10-5
10.3.2	Body Waste Management Facilities Design Considerations	10-6
10.3.3	Body Waste Management Facilities Design Requirements	10-9
10.3.3.1	Defecation and Urination Facilities Design Requirements	10-9
10.3.3.2	Facilities for Other Waste Products Design Requirements	10-11
10.3.4	Example Body Waste Management Facility Design	10-11
10.4	**CREW QUARTERS**	**10-11**
10.4.1	Introduction	10-11
10.4.2	Individual Crew Quarters Design Considerations	10-12
10.4.3	Individual Crew Quarters Design Requirements	10-14

10.5 GALLEY AND WARDROOM 10-15

10.5.1 Introduction 10-15

10.5.2 Galley and Wardroom Design Considerations 10-15

10.5.3 Galley and Wardroom Design Requirements 10-16

10.5.3.1 Overall Galley and Wardroom Layout Design Requirements 10-16

10.5.3.2 Food Selection, Prepartation, Consumption Design Requirements 10-17

10.5.3.3 Food Packaging and Stowage Design Requirements 10-17

10.5.3.4 Galley and Wardroom Cleaning Design Requirements 10-18

10.6 MEETING FACILITY 10-18

10.6.1 Introduction 10-18

10.6.2 Meeting Facility Design Considerations 10-18

10.6.3 Meeting Facility Design Requirements 10-21

10.6.4 Example Facility Design Solution 10-21

10.7 RECREATION FACILITY 10-21

10.7.1 Introduction 10-21

10.7.2 Recreation Facility Design Considerations 10-22

10.7.3 Recreation Facility Design Requirements 10-25

10.8 MICROGRAVITY COUNTERMEASURES FACILITY 10-25

10.8.1 Introduction 10-25

10.8.2 Microgravity Countermeasure Facility Design Consideration 10-25

10.8.3 Microgravity Countermeasure Facility Design Requirements 10-28

10.8.3.1 Microgravity Countermeasures Equipment/Supplies Design Requirements 10-28

10.8.3.1.1 Exercise Equipment 10-28

10.8.3.2.1 Exercise Countermeasure Environment Design Requirements . . 10-28

10.8.3.1.2.1 Resources 10-28

10.8.3.1.2.2 Additional Capabilities 10-28

10.8.3.2 Non-Exercise Countermeasures 10-28

10.8.3.2.1 Non-Exercise Countermeasures Design Requirements 10-28

10.8.3.2.1.1 Pressurized Countermeasures 10-29

10.8.3.2.1.2 Pharmacological Countermeasure 10-29

10.8.3.2.1.3 Space Motion Sickness Countermeasures 10-29

10.8.3.3 Microgravity Countermeasures Program Administration Design Requirements 10-29

10.8.3.4 Countermeasure Monitoring Design Requirements 10-29

10.8.3.5 Display Capabilities for Exercising Crewmembers Design Requirements 10-29

10.8.4 Example Microgravity Countermeasures Design Solution 10-30

10.9 SPACE MEDICAL FACILITY 10-30

10.9.1 Introduction 10-30

10.9.2 Space Medical Facility Design Considerations 10-33

10.9.2.1 Factors That Determine Health Care Needs Design Considerations 10-33

10.9.2.2 Functions of the SMF Design Considerations 10-33

10.9.2.3 Crewmember Skills Design Considerations 10-34

10.9.3 Space Medical Facility Design Requirements 10-34

10.9.3.1 Medical Communications/Computing Design Requirements 10-34

10.9.3.2 Equipment Requirements 10-34

10.9.3.2.1 Data Base and Communications Capability 10-34

10.9.3.2.2 Environmental Monitoring Equipment 10-34

10.9.3.2.3 Physiological Monitoring Equipment 10-34

10.9.3.2.4 Advanced Life Support 10-35

10.9.3.2.5 Laboratory 10-35

10.9.3.2.6 Diagnostic Imaging 10-35

10.9.3.2.7 Countermeasures 10-35

10.9.3.2.8 Surgery/Anesthesia Equipment 10-35

10.9.3.2.9 Dental Care Equipment 10-35

10.9.3.2.10 Intravenous Fluid Injection Supplies and Equipment 10-35

10.9.3.2.11 Hyperbaric Treatment Facilities 10-35

10.9.3.2.12 Pharmaceuticals 10-35

10.9.3.2.13 Central Supply 10-35

10.9.3.2.14 Physician's Instruments 10-36

10.9.3.2.15 Safe Haven Medical Design Requirements 10-36

10.9.3.2.15.1 Nominal Operation Design Requirements 10-36

10.9.3.2.15.2 Contingency Operation Design Requirements 10-36

10.9.3.2.16 Facilities For Processing and Storage of a Deceased Crew Member 10-36

10.10 LAUNDRY FACILITY 10-36

10.10.1 Introduction 10-36

10.10.2 Laundry Facility Design Considerations 10-36

10.10.3 Laundry Facility Design Requirements 10-37

10.11 TRASH MANAGEMENT FACILITY 10-38

10.11.1 Introduction 10-38

10.11.2 Trash Management Facility Design Considerations 10-38

10.11.3 Trash Management Facility Design Requirements 10-39

10.12 STOWAGE FACILITY 10-40

10.1.2.1 Introduction 10-40

10.12.2 Stowage Facility Design Considerations 10-40

10.12.3 Stowage Facility Design Requirements 10-41

10.0 ACTIVITY CENTERS
{A}

10.1 INTRODUCTION
{A}

The following section discusses the design and layout requirements for activity centers or off-duty crew stations for the Space Station Freedom. The on-duty crew stations, or workstations, which are defined as areas and/or associated equipment within a module dedicated to a specific on-duty crew activity, are covered in Section 9.0. The activity centers covered in this section include:

a. Personal hygiene facility.

b. Body waste management facility.

c. Crew quarters.

d. Galley and wardroom.

e. Meeting facility.

f. Recreation facilities.

g. Reduced gravity countermeasures.

h. Space medical facility.

i. Laundry facility.

j. Trash management facility.

k. Storage.

Many of these activity centers support crew health maintenance. The functional requirements for crew health maintenance are covered in Section 7.0, Health Management.

10.2 PERSONAL HYGIENE
{A}

10.2.1 Introduction
{A}

This section deals with the facilities required for personal hygiene. Personal hygiene includes:

a. Body washing (whole or partial).

b. Oral hygiene.

c. Hair cutting.

d. Grooming.

e. Shaving.

The section deals with the personal hygiene facility requirements only.

(Refer to Paragraph 7.2.5, Personal Hygiene, for information on personal hygiene and health care procedures.)

(Refer to Paragraph 7.2.5.3.6, Personal Hygiene Water Requirements, for information on water requirements for personal hygiene.)

(Refer to Paragraph 10.3, Body Waste Management Facilities, for information on facilities for handling body waste (urine, feces, menses, water, and vomitus).

10.2.2 Personal Hygiene Design Considerations
{A}

The following are considerations to be made in the design of a personal hygiene facility:

a. Psychological Effects - Good grooming can enhance self image, improve morale, and increase the productivity of the crewmember. Adequate and comfortable bathing and body waste management facilities have been high on the list of priorities of participants in various space missions. Some modification of personal hygiene practices and procedures may be necessary due to equipment design limitations and water supply restrictions. Too great a modification, however, could impact negatively on crew self image and productivity. It would be unwise to expect op-

timum performance unless optimum conditions are provided.

b. Odor - Objectionable body odors can rapidly build without adequate personal hygiene facilities. This is a predictable source of interpersonal conflict.

c. Ease and Comfort of Use - Experiences with the Skylab shower design has shown that personal hygiene facilities will be less frequently used if they are awkward, uncomfortable, or take an inordinate amount of time to use.

d. Privacy - It is desirable to have privacy for crewmembers for whole body and partial body cleaning (including donning and doffing of clothing).

e. Feedback - Unfamiliar and inadequate facilities and environment can result in crewmembers falling into patterns of substandard hygiene. The results are likely to be reduced productivity and interpersonal conflict. Provision of full length mirrors or other means of feedback can help to maintain personal image and hygiene habits.

f. Mission Duration - Shorter missions generally require less extensive personal hygiene facilities. Each of the facility design requirement paragraphs provide guidelines for determining facility requirements based on mission duration.

g. Microgravity Considerations:

1. Cleanup - In microgravity, water and debris, such as hair, do not fall to a fixed surface (such as the floor) as they do on Earth. Water and debris float. Water cannot be simply drained away and hair cannot be swept up. Collection of water and debris become both an engineering problem and an operational problem for the crewmember. Functions that require relatively little time on Earth, such as a shower, can require much more time and be less relaxing because of the cleanup requirements due to microgravity. This can impact negatively both on mission schedule and personal motivation to use the facilities. Designs should minimize the time and discomfort penalties resulting from microgravity.

(Refer to Paragraph 13.2, Housekeeping, for additional microgravity considerations.)

2. Restraints - Restraints should be provided so that the crewmember does not compromise the personal hygiene operations by having to stabilize him or herself. These restraints should be compatible with the personal hygiene operation. For example, foot restraints in a whole body wash facility should not be damaged when exposed to water.

h. Skin Infections - In Skylab, there were skin infections due to microbial buildup and cross contamination between crewmembers.

10.2.3 Personal Hygiene Design Requirements

{A}

The following requirements shall apply to all Personal Hygiene Facilities.

a. Easily cleaned, sanitized, and maintained.

b. One facility shall be supplied for every four crewmembers.

10.2.3.1 Partial Body Cleansing Design Requirements

{A}

Partial body cleaning facility requirements are listed below:

a. Necessity for Facility - Partial body cleaning facilities shall be provided on all missions that exceed 1 day. On missions of 30 days or more, one facility shall be provided for every four crewmembers. A partial body washing facility shall be provided to accomplish washing of selected body areas for the following functions as required:

1. Post-urination/defecation.

2. Post-exercise.

3. During medical/health maintenance.

4. Pre- and post experimentation or other work requiring specialized washing.

5. Pre- and post meals.

6. Accidental exposure to toxic substances.

b. Design Requirements - All partial washing equipment using water shall have the following design characteristics:

1. Method to allow application of water to the hands and face.

2. Method to remove excess water from the body and facility, and cleansing aids.

3. Means to control water temperature.

4. Means to control water flow/usage.

5. Means to prevent water from escaping into the module environment.

6. Compatibility with the use of soap, shampoo, and antiseptic solutions, and accommodation of hair and other similar substances which might commonly find their way into such an area.

(Refer to Figure 10.3.2-1 for rate of body waste generation.)

7. Means to prevent cross contamination among crewmembers.

8. Means for final drying of body part.

9. Appropriate body and equipment (e.g., towels) restraints for reduced gravity conditions.

10. A means to personally code crew hygiene items.

c. Cleansing Agents - Refer to Paragraph 10.2.3.2.d.

10.2.3.2 Whole Body Cleansing Design Requirements

{A}

Whole body cleansing facility requirements are listed below:

a. Necessity for Facility - A whole body cleansing facility shall be provided for all long duration missions.

b. Equipment Design - Whole-body cleaning equipment with the following design characteristics shall be provided:

1. Method to apply water directly to the body.

2. Method to remove excess water from the body and facility.

3. Means to control water temperature.

4. Means to control water flow/usage.

5. Means to prevent water from escaping into the module environment.

6. Compatibility with the use of soap, shampoo, and antiseptic solutions, and accommodation of hair and other similar substances that might commonly find their way into such an area.

(Refer to Figure 10.3.2-1 for rate of body waste generation.)

7. Means to prevent cross-contamination among crewmembers.

8. A means for final body drying after whole body cleaning.

9. Appropriate body and equipment (e.g., towels) restraints for reduced gravity conditions.

10. A means to personally code crew hygiene items.

11. Air temperature and flow in the whole body cleansing facility must be adjustable by the user from within the facility.

c. Privacy - Privacy shall be provided for whole body cleaning.

d. Cleansing Agents - Cleansing agents shall be provided which meet the following requirements:

1. Soap, shampoo, and other cleansing agents shall be chosen for their compatibility with a wide range of skin types in a low humidity environment.

2. Some range of personal selection of cleaning agents, perhaps including alternative off-the-shelf commercial brand name preparations, shall be permitted as long as all items are judged safe for use in the space module environment and are compatible with on-board water reclamation and/or water and solid waste disposal systems.

e. Dressing Area - The capability for private body drying and dressing and a dry area for clothes shall be provided adjacent to the whole-body cleansing facility. The area provided for body drying and dressing shall be temperature controlled.

f. Capacity - The whole body washing system shall have sufficient capacity to allow each crewmember to wash a minimum of three times a week.

10.2.3.3 Oral Hygiene Design Requirements

{A}

Oral hygiene facilities shall be provided for the crew and shall meet the following requirements:

a. Necessity for Facility - Oral hygiene facilities shall be provided for all missions that exceed 1 day.

b. Functional Requirement - Facilities shall allow the crew to daily maintain proper tooth, oral cavity, and gum cleaning and care.

c. Cross Contamination - The facilities shall prevent cross contamination among crewmembers.

d. Expectoration - Provide facility as necessary to allow the user to expectorate washing fluids and spittle.

10.2.3.4 Hair Cutting Design Requirements

{A}

The hair cutting facility shall meet the following requirements:

a. Necessity for Facility - A facility shall be provided as necessary to keep facial and head hair the length dictated by mission requirements and personal grooming preferences.

(Rate of hair growth is shown in Figure 10.3.2-1.)

b. Facility Design - The facility shall be sufficiently large to allow a crewmember to assist in hair cutting and trimming. The facility shall be equipped with appropriate storage areas, restraints, and mirrors.

c. Debris Containment - The facility shall ensure that hair is contained and does not escape into the space module environment.

(Refer to Section 5.1.3 Long-Term Mission Atmosphere Design Requirements, for further information on debris containment requirements.)

d. Lighting - Lighting shall be sufficient to see small details and shall be a minimum of 217 lux (20 fc).

(Refer to Paragraph 8.13, Lighting, for specific lighting requirements.)

10.2.3.5 Grooming and Shaving Design Requirements

{A}

Facilities shall be provided for the crewmember to maintain personal grooming. The facilities shall meet the following requirements:

a. Necessity for Facilities - A shaving and grooming facilities shall be provided for all missions that exceed 2 days.

(Refer to Figure 10.3.2-1 for the rate of generation of nails and hair.)

b. Debris Containment - The capability shall be provided for collection and containment of body hair and nails.

(Refer to Paragraph 5.1.3, Long-Term Mission Atmosphere Design Requirements, for further information on debris containment requirements.)

c. Supplies - Each crewmember shall have available a supply of items as required for skin care, shaving, hair removal (depilatory), hair grooming, nail care, and body deodorizing.

1. Grooming supplies, including soap, shampoo, and other cleansing agents, shall be chosen for their compatibility with a wide range of skin types in a low humidity environment.

2. Some range of personal selection of cleaning agents, perhaps including alternate off-the-shelf commercial brand name preparations, shall be permitted as long as all items are judged safe for use in the space module environment and are compatible with onboard water reclamation and/or water and solid waste disposal systems.

d. Facility Design - Grooming facilities shall consist of a designated space equipped with appropriate stowage areas, restraints, mirrors, and access to a water supply.

e. Lighting - Lighting shall be sufficient to see small details and shall be a minimum of 217 lux (20 fc). (See Paragraph 8.13, Lighting, for further lighting information).

10.3 BODY WASTE MANAGEMENT FACILITIES

{A}

10.3.1 Introduction

{A}

This section discusses the human factors design considerations and requirements for the collection and disposal of wastes generated by the human body. The body waste management facilities handle feces, urine, vomitus, diarrhea, menses, and other wastes. Transfer, storage, and processing of waste products are not covered in this section; only facilities that directly interface with the crew are covered.

(Refer to Paragraph 8.3, Crew Station Adjacencies, for information on the design of waste management facilities.)

(Refer to Paragraph 14.2.3.7, EVA Body Waste Management Design Requirements, for information on the EVA waste management system.)

10.3.2 Body Waste Management Facilities Design Considerations

{A}

The following considerations should be made in the design of the waste management system:

a. Reliability and Maintainability - System servicing and repair tasks are neither pleasant nor mission productive. Therefore, the system should be as reliable as possible and require a minimum of repair time. Scheduled maintenance and servicing times, including unloading and refurbishment, should be kept to a minimum.

b. Ease of Use - The system should be simple and quick to use. The system should readily be available for emergencies such as vomiting or diarrhea. As a design goal, the facilities should be used like and require approximately the same amount of time for use as equivalent Earth facilities.

c. Acceptance - The body waste management systems must be both psychologically and physiologically acceptable to the crewmembers. An unacceptable system can result in deliberate restriction or modification of the diet by the crew and possible nutritional deficiencies.

d. Microgravity Considerations - Gravity plays an important role in the removal of feces from the body during defecation in a 1-G environment. A substitute must be provided in a microgravity environment. Air flow has been used successfully in the past for the entrainment of both feces and urine in microgravity.

e. Post Defecation Cleansing - In microgravity, many more tissues are needed for cleansing the anal areas after defecation, because gravitational forces are not present to aid in separation of the feces from the body. Also, since settling does not occur, the uncompacted wipes occupy 1 1/2 to 3 times the volume that would be used in a 1-G environment.

f. Volume and Mass of Body Waste Products - The volume and mass of human body wastes are shown in Figure 10.3.2-1. Additional information is given below:

1. The normal feces bolus of a healthy adult varies in size from 100 to 200 mm (4 to 8 in) long by 15 to 40 mm (0.5 to 1.5 in) in diameter and weighs 100 to 200 grams (3.5 to 7 oz).

2. Urination time and rate of flow ranges are shown in Figure 10.3.2-2. Urine volumes tend to be larger in microgravity.

3. The maximum volume of expelled vomitus can be 1 liter (61 in^3) of solids and fluids. This is with a fully distended stomach. The average volume of vomitus is more likely to be 200 to 500 ml (12 to 31 in^3).

g. Anatomical Considerations - Dimensions of the body that should be considered for design of waste management facilities are shown in Figure 10.3.2-3. The body protuberances of the pelvis, ishial tuberoscities, support the seated body in one-G conditions. In reduced gravity conditions, seat contours and restraints can help the crewmember to locate the ishial tuberoscities and thereby properly position the anus and urethra in relation to the collection devices. If air flow is used for collection and entrainment of feces and urine, it may be necessary to minimize the opening size for sealing. It has been found in both 1-G and microgravity conditions that it is possible

Waste products	Mass (gm/person/day)	Volume (ml/person/day)
Hair growth	0.03 (0.3 to 0.5 mm per day)	
Desquamated epithelium	3	2
Hair — depilation loss	0.03	0.03
Hair — facial — shaving loss	0.3	0.28
Nails	0.01	0.01
Solids in sweat	3	3
Sebaceous excretion — residue	4	4.2
Solids in saliva	0.01	0.01
Mucus	0.4	0.4
Mensus (see note 1)	113.4	113.4
Flatus as gas	—	2000
Solids in feces	20	19
Water in feces	100	100
Solid in urine	70	66
Water in urine (note 2)	1630	1630

Reference: 19, Section DNK3, Page 2
142, Page 229
278, Sec. C-2-3, Page C-26

Notes:

1. Approximately once every 26 to 34 days and lasts 4 to 6 days, approximately 80% released during first 3 days.
2. Based on Skylab data

MSIS-215

Figure 10.3.2-1. Volume and Mass of Human Body Wastes

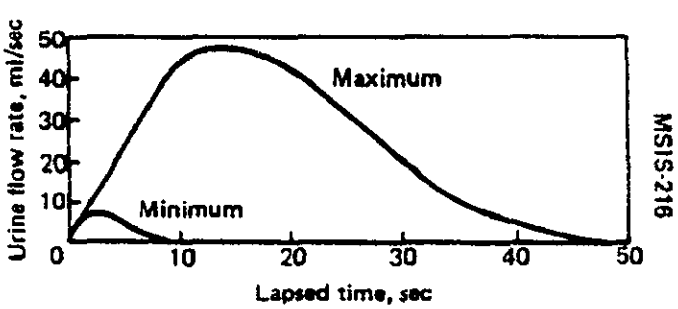

MSIS-216

Reference: 339, Figure 1, page 2

Figure 10.3.2-2. Urination Time and Flow Rates

Dimen-sion	Description	Dimension range cm (inches)	
		Male	Female
A	Lateral separation of ischial tuberosity	10 to 14 (4.0 to 5.5)	11 to 16 (4.3 to 6.2)
B	Width of perineal furrow	7.5 to 9 (3.0 to 3.5)	7.5 to 9 (3.0 to 3.5)
C	Anterior/posterior separation between tuberosities and exterior urethral opening	13 to 27 (5 to 10.6)	6 to 9 (2.5 to 3.7)
D	Anterior/posterior separation between anus and external urethral opening	15 to 30.5 (6 to 12)	9 to 11.5 (3.5 to 4.5)

Reference: 339, page 3
344, page 124

MSIS-217

Figure 10.3.2-3. Anatomical Dimensions for the Design of Body Waste Management Facilities

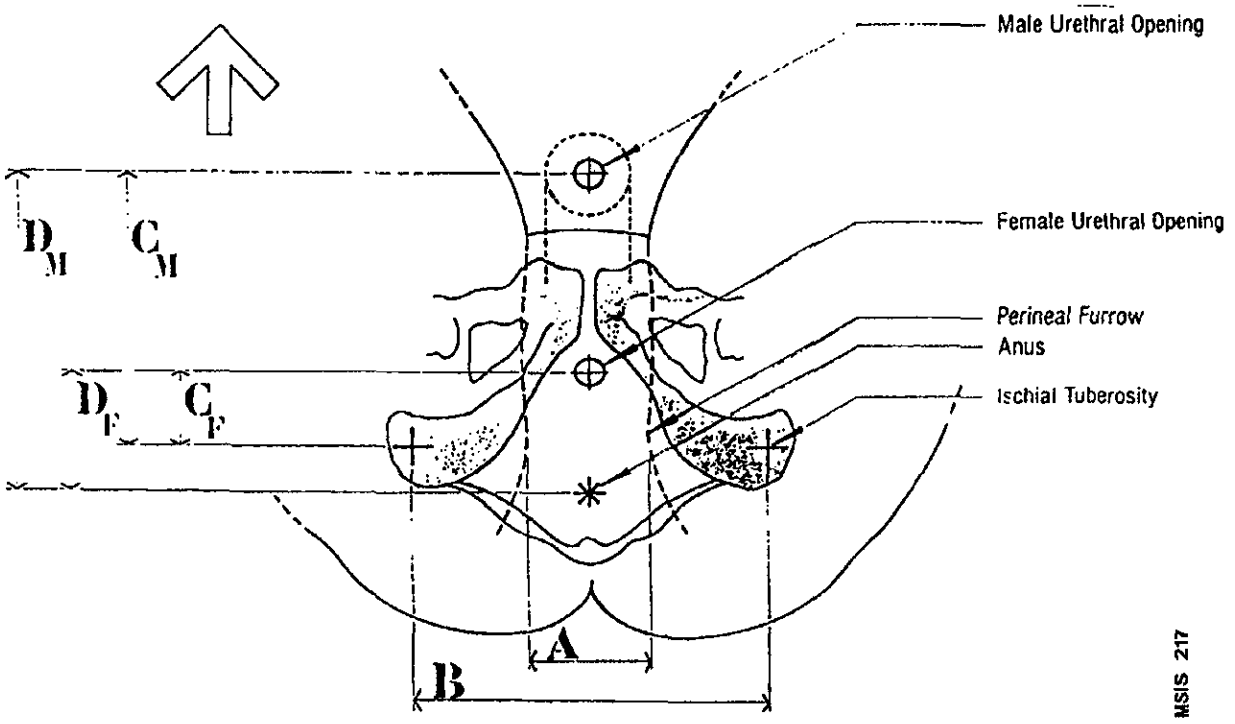

MSIS 217

References: 375 and 376

Diagram: Claudio Veliz, Architect

to defecate through a 10 cm (4 in) diameter opening, although significant problems have been noted with this small an opening.

h. Body Posture - The following are considerations for determining the body posture during body waste management functions:

1. Urination - There is no evidence to suggest that posture has any effect on facilitating the act of urination.

2. Defecation - The act of defecation involves the use of the stomach muscles. The body should be positioned so that these muscles are supported and not strained.

10.3.3 Body Waste Management Facilities Design Requirements

{A}

10.3.3.1 Defecation and Urination Facilities Design Requirements

{A}

The following are requirements for the design of crew defecation and urination facilities:

a. Use Accommodation - The collection module shall allow a male or female crewmember to defecate and urinate simultaneously while seated.

b. Vomitus Collection - Accommodations shall also be provided for vomitus collection within reach of the seated crewmember.

c. Ease of Urination - The urine receiver shall be located so that any crewmember may also urinate in the standing position without removing lower clothing.

d. Number of Facilities - One facility shall be provided for every four crewmembers.

e. Fecal Collection - Fecal collection facilities shall meet the following requirements:

1. The facilities shall provide crew interfaces to accommodate the collection of fecal solids, liquids, gases, particulates, and associated consumable material (e.g., wipes).

2. The facilities shall allow simultaneous urination and defecation while seated. In addition, accommodations shall be provided for vomitus collection within reach of the seated crewmember.

3. Capacity - The fecal collection system shall have the following capacity:

a) The average per person per day amount of fecal matter which the fecal collection devices shall accommodate shall be 142 grams (5.0 ounces) by weight and 142 ml (8.5 cubic inches) by volume.

b) The capability to accommodate a maximum of 1000 ml (61 cubic inches) of diarrhea discharge shall be provided.

c) The fecal collector shall accommodate a maximum BOLUS length of 330 mm (13 in).

d) Quantities in excess of these amounts shall not result in an unrecoverable condition.

f. Urine Collection - Urine collection facilities shall meet the following requirements.

1. The facilities shall provide crew interfaces to accommodate liquid capture and splash control, and disposal of associated consumable material (e.g., wipes).

2. The facilities shall capture, isolate, stabilize, and store all wastes and wipes generated during urination.

3. Capacity - The urine collection system shall have the following capacity:

a) The urine collection devices shall accommodate a maximum urine output volume of 4000 ml (244 cubic inches) per person per day.

b) The urine collection system shall be designed to accommodate urinary discharge up to 800 ml (49 cubic inches) in a single micturition at a delivery rate of 50 ml/sec (3 cubic inches per second).

c) Urine volumes in excess of these amounts shall not result in an unrecoverable condition.

g. Sanitation - The defecation and urination facilities shall meet the following sanitation requirements:

1. The facilities shall be designed to allow periodic cleansing and disinfection of crew interfaces and subsystems.

2. The facilities shall prevent cross contamination among the crewmembers.

3. The facilities shall not contaminate other areas of the space module.

h. Noise - A means shall be provided to control noise form the facility equipment and/or crewmembers when the equipment is in operation.

i. Odors - Odors from the facility and from storage and handling facilities shall be controlled.

j. Privacy - Defecation and urination facilities shall provide both visual and auditory privacy for the user.

k. Capacity - Sufficient urination and defecation facilities and capacity shall be provided to allow use by the crew within mission time and schedule constraints.

l. Contingency System - A contingency urination and defecation facility shall be provided in the event of primary system failure.

m. Restraints - Appropriate restraints shall be provided for facility user and post use cleanup.

n. Body Cleansing - Provision shall be provided in the urination and defecation facilities for inspecting and cleaning the body after use and the disposal of used materials.

o. Anatomical Accommodation - Urination and defecation facilities shall be provided to accommodate the physiological differences of male and female crewmembers and the anatomical size range of the crew. The crew interface hardware shall be appropriately designed to allow easy interface with other personal hygiene equipment, personal hygiene supplies, and crewmember clothing.

p. Handling of Feces and Urine - If a crewmember is required to handle urine or feces samples for transfer to another area, the following requirements apply:

1. Crewmembers shall be protected form direct contact with waste material.

2. Waste material odors shall be controlled.

3. Methods shall be provided to prevent escape of waste material into the environment.

4. Transfer containers shall be so constructed to prevent microbial escape during transfer.

g. Inspection - The capability shall be provided for a crewmember to visually inspect his or her fecal waste products.

10.3.3.2 Facilities for Other Waste Products Design Requirements

{A}

In addition to facilities for urination and defecation, the waste management facility shall have the following capabilities:

a. Vomitus - The waste management facility shall be able to collect, contain, transport, and treat vomit. The collection facility shall be readily accessible, particularly during the first few days of the mission.

b. Menses - A means of collection, treatment, and disposal of menstrual discharge and associated absorbant material shall be provided to female crewmembers. The facility shall be private.

c. Transfer Containers - Transfer containers, if required, shall be so constructed as to prevent microbial escape during transfer.

10.3.4 Example Body Waste Management Facility Design

{O}

The STS urination and defecation facility contains the following features which have proven successful:

a. Restraints - The following restraints are provided in the facility:

1. Spring loaded thigh bars that press the user against the opening used for defecation.

2. Footstraps to stabilize the body for clean up after defecation.

b. Urine collectors - Funnels at the end of a suction tube are used to collect urine only (without defecation). For males, a straight conical funnel approximately 7.6 cm (3 in) long and 5.4 cm (2-1/8 in) in diameter (at the large end) was selected as optimum. For females, an oval funnel was developed which had angled air inlet openings to give a vortex action to the airflow. Each crewmember has a personal collector.

c. Supplies - The compartment is arranged so that cleanup supplies can be readily accessed. These supplies should include gloves, dry and wet wipes, tissues, germicidal agents, etc. The overall layout is shown in Figure 10.3.4-1.

10.4 CREW QUARTERS

{A}

10.4.1 Introduction

{A}

This section covers design considerations and requirements for the design and layout of private activity and sleeping quarters for an individual crewmember. Although the quarters described are basically for use in a microgravity environment, most of the considerations and requirements listed are applicable to systems in any space environment.

(Refer to Paragraph 8.6, Envelope Geometry For Crew Functions, for volume envelope design considerations and requirements.)

(Refer to Paragraph 8.3, Crew Station Adjacencies, for information on crew quarters location considerations and requirements.)

(Refer to Paragraph 7.2.4, Sleep, for information on sleep and its relationship to health.)

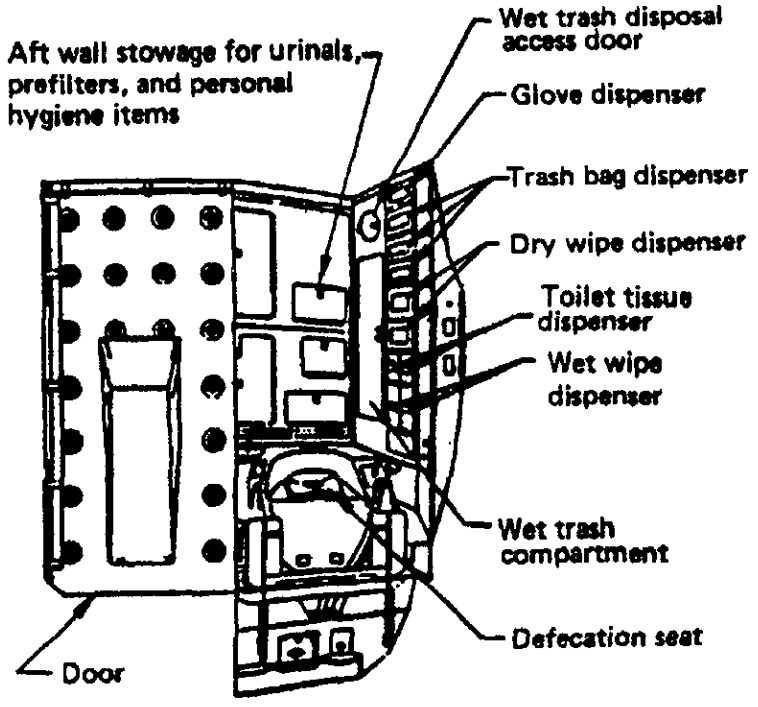

Reference: 312, page 882

MSIS-218

Figure 10.3.4-1. Overall Layout of the STS Waste Management Station

10.4.2 Individual Crew Quarters Design Considerations

{O}

The following design considerations apply to the design and layout of crew quarters.

a. Mission Duration and Privacy - The amount of volume required for each crewmember is dependent on the duration of the mission. As the mission becomes longer the need for privacy increases. Crewmembers sequentially occupying the same sleep space (hot-bunking) should usually be avoided. There are several design solutions for individual privacy. One of these solutions is described in this section: private quarters for individual recreation and sleeping. Other arrangements for privacy include:

1. Dormitory sleeping and private areas available to each crewmember.

2. Shared private quarters so that two crewmembers on different shifts share the same quarters.

3. Quarters for two individuals who want privacy (i.e., married couples).

4. Expanded function quarters which might include full body wash facility, waste management facility, office, private dining, or meeting facility.

b. Functional Considerations - The design and layout of the crew quarters depends on the functions that are to be performed. Figure 10.4.2-1 shows the functions that might occur in individual crew quarters and the design considerations to accommodate these functions.

Function	Design considerations	Reference paragraphs
Wake up	Alarm or annunciator	9.4.4
Dress	Adequate volume	8.6.2.3
	Privacy	8.6.2.4
	Restraints	11.7
	Clothes and personal items storage	10.4.3
Straighten/clean quarters	Bedding storage	
	Vacuum and wipe capability	13.2
Groom	Adequate lighting	10.2.3.5
	Mirrors	10.2.3.5
	Stowage for grooming supplies	10.2.3.5
	Proximity to personal hygiene facility	8.3.2.2
Exit	Lock for personal items	
	Properly configured door and path	8.8, 8.10
Enter	Properly configured door	8.8, 8.10
Relax	Communications with friends or family at home	10.7.2
	Entertainment materials: books, audio and video entertainment, games, etc.	
	Adjustable lighting	8.13
	Window	8.11, 11.11
	Ventillation and temperature control	5.8
	Restraint	8.9, 11.7, 11.8
	Snack storage and cleanup capability,	
	Aesthetically pleasing environment	8.12
Prepare for sleep	Clothing and bedding storage	10.10.3
	Proximity to personal hygiene and body waste management facility	8.3
	Privacy	
Sleep	Quiet	5.4
	Privacy	
	Adjustable lighting	8.13
	Bedding	
	Restraints	8.9, 11.7, 11.8
	Ventilation and temperature control	
	Stability (minimum vibration and acceleration)	5.5
Emergency	Alarm	9.4
	Two way communications with other crewmembers or ground control	9.4.3
	Emergency lighting	8.13
	Properly configured door and path	8.8, 8.10
Work	Privacy	
	Workstation	

MSIS-347

Figure 10.4.2-1. Individual Crew Quarter Functional and Design Considerations

10.4.3 Individual Crew Quarters Design Requirements

{A}

The following are design requirements for one-person individual crew quarters:

a. Communications - Two way audio/visual/data communications system shall be provided between the crew quarters and other module areas, and the ground. The system shall have the capability of alerting the crew quarters occupant in an emergency.

b. Environmental Controls - Independent lighting, ventilation and temperature control shall be provided in crew quarters and shall be adjustable from a sleep restraint.

(Refer to Paragraph 5.8.3, Thermal Environment Design Requirements, for thermal and ventilation requirements, and Paragraph 8.13.3, Lighting Design Requirements, for lighting requirements.)

c. Noise - The noise levels in the crew quarters shall be as defined in Paragraph 5.4.3.2.3.1.

(Refer to Paragraph 5.4.3.2.3.1, Wide-Band Long-Term Noise Exposure Requirements, for permissible noise levels.)

d. Movement - The vibration and acceleration of the crew quarters shall be minimized to the maximum extent possible.

(Refer to Paragraph 5.5.3.3.3, Reduced Comfort Boundary, for sleep area vibration limits.)

e. Stowage - Facilities shall be provided in the crew compartment for stowing the following items:

1. Bedding.

2. Clothing.

3. Personal Items.

f. Compartment Size - For long duration space missions, dedicated, private crew quarters shall be provided for each crewmember with sufficient integral volume to meet the following functional and performance requirements:

1. 1.50 m^3 (53 ft^3) for sleeping.

2. 0.63 m^3 (22 ft^3) for stowage of operational and personal equipment.

3. 1.19 m^3 (42 ft^3) for donning and doffing clothing.

4. Additional free volume, as necessary, for using a desk, computer/communication system, trash stowage, personal grooming, dressing/undressing convalescence, off-duty activities, and access to stowage or equipment without interference to or from permanently mounted or temporarily stowed hardware. The internal dimensions of the crew quarters shall be sufficient to accommodate the largest body size crewmember under consideration.

(Refer to Figure 8.6.2.3-1 for maximum 1-g unrestrained clothing don/doft envelope.)

g. Exit and Entry - The opening shall be sufficiently large to allow contingency entry by an EVA suited crewmember.

(Refer to Paragraph 8.10.3, Hatch and Door Design Requirements, for requirements on doors.)

(Refer to Paragraph 14.5.3.5, EVA Passageway Design Requirements, for minimum opening for EVA suited crewmember.)

h. Privacy - The individual crew quarters shall provide visual privacy to and form the occupant and acoustic privacy as defined in Paragraph 5.4.3.2.3.1.

i. Restraints - Restraints shall be provided as necessary for activities such as sleeping, dressing, recreation, and cleaning.

(Refer to Paragraph 11.7.2.3, Personnel Restraints Design Requirements, for requirements on restraints.)

j. Windows - Window accommodations shall be provided in individual crew quarters on long duration missions.

10.5 GALLEY AND WARDROOM

{A}

10.5.1 Introduction

{A}

This section discusses the galley and wardroom and the facilities in these areas for the storage, preparation, consumption, and cleanup of food and water. The section covers equipment requirements only.

(Refer to Paragraph 7.2.2, Nutrition, for information on nutritional requirements.)

The wardroom can be used for purposes other than an eating facility, including recreation or meetings.

(Refer to Paragraph 10.6, Meeting Facility, for a discussion of meeting facilities.)

(Refer to Paragraph 10.7, Recreation Facility, for a discussion of recreational facilities.)

10.5.2 Galley and Wardroom Design Considerations

{A}

The following are considerations for the design of the space module galley and wardroom:

a. Meal Selection - The specific meal selected by the crewmember will depend on a variety of factors. Any system designed to assist the crewmember in the selection and retrieval of the food should incorporate these factors. Factors which will influence meal selection are listed below:

1. Personal preference of the crewmember.

2. Food inventory.

3. Nutritional requirements of the crewmember.

4. Schedule and the time available for meal preparation and consumption.

5. Special nutritional studies.

b. Meal Preparation and Cleanup Method - The method of meal preparation and cleanup must be considered. If each individual is to prepare their own meal, then the galley must be sized to allow several crewmembers to work simultaneously (assuming a common meal shift). If one or two persons will be assigned to meal preparation and cleanup, then the galley could be smaller.

c. Type of Food and Food Packaging - Food type, packaging, and food preparation hardware must be compatible. Fresh food or food packaged in bulk form will require different preparation equipment than preprepared food in individual servings.

d. Food Serving Methods and Utensils - The type of equipment selected to serve and eat the food will impact the design of the galley. Preparation in disposable packages and consumption with disposable utensils will reduce the need for dishwashing facilities but may impact significantly the mass and volume of disposable biologically active trash.

e. Food Consumption Locations - Past space flight experience is indicated that a large percentage of food is consumed at work stations remote from the food preparation area. This strongly indicates

that provisions should be made for frequent consumption of food as efficiently and completely as possible at locations remote from the preparation area.

f. Human Productivity - The design of the galley should minimize crew time and effort and maximize acceptability of the food. Routine and onerous tasks should be eliminated or automated if possible.

g. Recreation/Enjoyment - Meals can do a lot to enhance the quality of the crewmembers' lives. In addition to satisfying hunger, mealtime can provide a chance to rest, socialize, and provide a familiar contact to normal Earth living. In addition to the boost in individual morale, there are advantages to be gained from the social aspects of mealtime. It has been suggested that space travelers should plan to share at least one meal a day together in order to help maintain a positive group feeling.

h. Microgravity Considerations - Some of the effects of microgravity that must be considered in galley and wardroom design are listed below:

1. Powdered or flaky foods will separate and float away. Sticky foods or foods held together with a semi-liquid substance (gravy or sauce) can remain in open containers without floating away.

2. Trash will tend to float and fill all available space in a trash container. Trash compaction is necessary.

3. Food preparation techniques, such as boiling and convection heating (without forced air), will not work in microgravity.

4. Spills, trash, and odorous particulates will not settle to the floor. Waste should be captured, contained, and stabilized.

(Refer to Paragraph 13.2, Housekeeping, for additional information.)

10.5.3 Galley and Wardroom Design Requirements

{A}

10.5.3.1 Overall Galley and Wardroom Layout Design Requirements

{A}

The following requirements apply to the overall layout of a space module galley and wardroom:

a. Traffic Flow - The galley and wardroom shall be configured to provide clear traffic paths for the crew to efficiently perform the following tasks:

1. Food selection and inventory control.

2. Food retrieval.

3. Food preparation.

4. Food consumption.

5. Clean up.

b. Size of Crewmembers - Galley and wardroom hardware shall be usable by international crews and by the full size range of crewmembers.

(See Paragraph 3.3.1, Body Size, for specific dimensions.)

c. Restraints - Restraints shall be provided for crewmembers, food, utensils, cooking equipment, and other loose items as necessary at galley and wardroom locations.

d. Lighting and Noise Conditions - The capability to adjust light levels and directionality shall be provided. Ambient noise levels shall be held below limits defined in Paragraph 5.4.3.2.3.1 as defined for work periods.

(Refer to Paragraph 11.7, Personnel Restraints Design Requirements, for specific restraint design requirements.)

10.5.3.2 Food Selection, Preparation, Consumption Design Requirements

{A}

The space module galley and wardroom shall provide the following facilities for food selection, preparation, and consumption:

a. Inventory Update and Review - The galley shall provide a system which allows for simple and rapid update and review of the food, beverage and water inventory.

(Refer to Paragraph 13.3.3, Inventory Control Design Requirements, for additional requirements.)

b. Identification - All food items shall be identifiable in terms of contents and method of preparation.

c. Accessibility - A pantry or immediately accessible stowage area for at least one day's food supply for the entire crew shall be provided in the galley.

d. Heating - A means shall be provided in the galley for heating food and liquids to at least 66° C (150 ° F) in less than 30 minutes and for maintaining that temperature.

e. Chilling - A means shall be provided in the galley for cooling food and liquids to 4° +/- 2° C (39° +/- 3°F).

f. Rehydration - A means shall be provided in the galley for injecting necessary potable water for rehydration of food.

(Refer to Paragraph 7.2.2.3.2, Potable Water - Design Requirements, for potable water requirements.)

g. Serving and Preparation Utensils - Area shall be provided in the galley for stowage of the following serving and preparation items:

1. Eating utensils.

2. Servicing equipment (trays, plates, containers, etc.).

3. Preparation tools and containers.

h. A table shall be provided for eating.

10.5.3.3 Food Packaging and Stowage Design Requirements

{A}

In addition to the general packaging design requirements given in Paragraph 11.12.3, all food packaging shall be designed to meet the following requirements:

a. Package Portions - Food shall be packaged in quantities optimally suited for ease of handling and rate of consumption.

b. Rehydration Provisions - For foods that require water for reconstitution, provision shall be made for the package to accept water directly from a probe without contaminating the probe and to hold the water and contents without spillage after removal of the probe.

c. Kneading Provisions - For foods that require in-package mixing, provision shall be made for kneading of the enclosed contents without spillage and with adequate visibility.

d. Integration With Food Preparation System - For foods that require heating, chilling, mixing, repackaging, etc., the food packaging and appropriate food preparation system(s) shall be compatible.

e. Minimum Spillage - Food packages and ancillary hardware shall be designed to facilitate eating with minimum spillage.

f. Toxicity - Food packaging materials shall be approved by the Food and Drug Administration Department of Health and Human Services.

10.5.3.4 Galley and Wardroom Cleaning Design Requirements

{A}

The following facilities shall be provided for galley and wardroom cleaning and sanitation:

a. Design for Cleaning - The surfaces in the galley and wardroom shall be easily accessible for cleaning and sanitation. The surface texture shall be capable of being wiped clean. Closeouts shall be provided to preclude contamination in areas that are inaccessible.

b. Cleaning Supplies and Equipment - Cleaning supplies and equipment shall be readily available to the galley and wardroom. The equipment and supplies shall be capable of the following:

1. Sanitizing the galley and wardroom.

2. Collection, containment, and stabilization (as necessary) of debris, spills, and odors.

3. Washing and sanitizing of reusable utensils, serving equipment, and preparation equipment.

c. Trash Collection - A trash collection point shall be provided in the galley and wardroom for both wet and dry trash. Trash shall be kept out of sight and odors shall be controlled so that the trash collection points are not aesthetically objectionable to the crew.

(Refer to Paragraph 13.2.3, Housekeeping Design Requirements, for specific requirements.)

10.6 MEETING FACILITY

{A}

10.6.1 Introduction

{A}

This section discusses the considerations and requirements for the design of a meeting facility within the space module. The wardroom can be used as a meeting facility.

10.6.2 Meeting Facility Design Considerations

{A}

The following considerations should be made for the design of a meeting facility:

a. Capacity - The meeting facility must comfortably and safely accommodate the expected number of meeting participants. This includes the passageways to meeting facility, the size of the entry and exit, and the volume of the room.

b. Location - If a meeting facility is to be used often, then it should be located centrally to the space module where transit times for the participants can be minimized. The following are additional location considerations:

1. Waste management facility - It is desirable to have waste management facilities near the meeting facility if the meetings last more than 1 to 2 hours.

2. Galley - It is desirable to have availability of refreshment during extended meetings.

3. Sleeping or other areas sensitive to noise, light, and vibration - The activities in a meeting may be disturbing to adjacent functions. The meeting facility location should be selected with this in mind.

(Refer to Paragraph 8.3, Crew Station Adjacencies, for more information on adjacencies.)

c. Location of Meeting Participants - Participants should be positioned to facilitate the various types of meetings to be conducted. This requires flexibility in the location of the furnishings and seating or restraint placement (in the case of

microgravity conditions). The following arrangements are possible:

1. Full crew interactive discussions; large table

2. Small group interactive discussions.

3. Several small group interactive discussions.

4. Auditorium presentation.

Guidelines for arrangement of interactive meeting places in 1-G or partial gravity conditions are shown in Figure 10.6.2-1. In microgravity conditions, the neutral body posture should be accommodated in the size and arrangement of the meeting facility. Figure 10.6.2-2 gives information on the arrangement of an auditorium for screen viewing. This information applies to all gravity conditions.

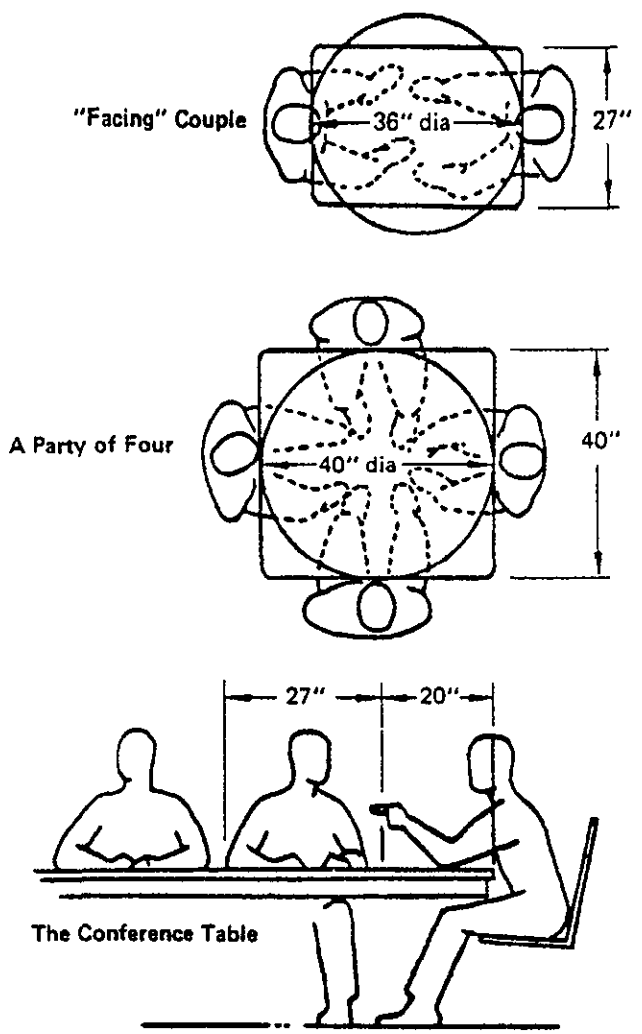

Reference: 111, page 694

MSIS-342

Figure 10.6.2-1. Guidelines for Arrangement of Interactive Meetings: Partial or One Gravity Conditions

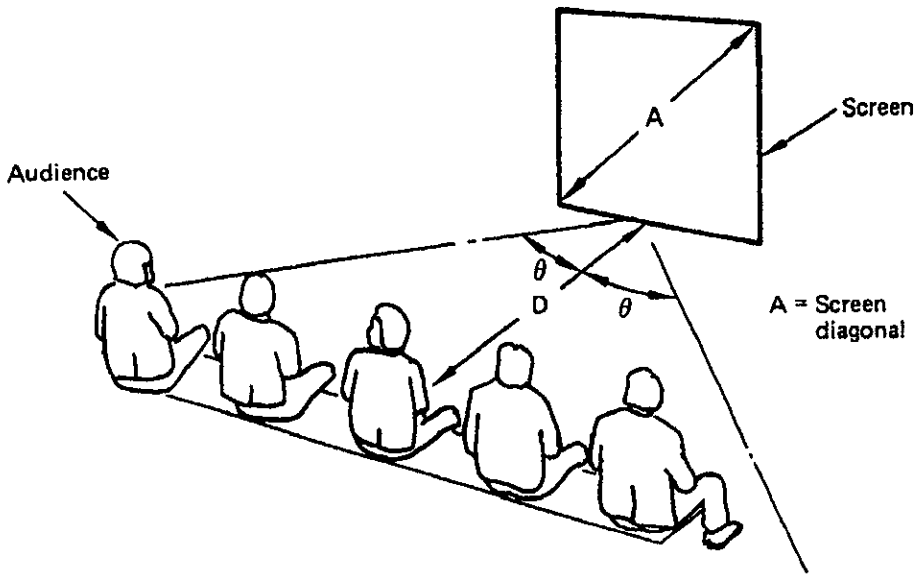

Factor	Optimum	Preferred limits	Acceptable limits
D Viewing distance to the screen	4 x A	3 x A to 6 x A	2 x A to 8 x A
θ Angle off centerline	0 deg	20 deg	30 deg

MSIS-343

Reference: 2, page 46

Figure 10.6.2-2. Auditorium Arrangement for Viewing Large Screen Displays

(Refer to Paragraph 8.6.2.3, Body Envelope Design Considerations, for the neutral body posture envelope, and Paragraph 3.3.4, Neutral Body Posture, for neutral body posture limb angles.)

d. Environmental Factors - The following are environmental considerations for design of a meeting facility:

1. Noise - The noise level must be sufficiently low to conduct meetings.

(Refer to Paragraph 5.4.3.2.2.1, Direct Voice Communications Noise Exposure Requirements, for noise level requirements.)

2. Temperature and ventilation - The temperature and ventilation control system will have to accommodate several different group sizes.

(Refer to Paragraph 5.8.3, Thermal Environment Design Requirements, for temperature and ventilation requirements.)

3. Lighting - The meeting facility lighting must allow viewing of both projected or self-illuminated displays and non self-illuminated displays.

(Refer to Paragraph 8.13.3, Lighting Design Requirements, for additional information.)

e. Equipment Requirements - The meeting facility should provide equipment and equipment storage areas necessary for conduct of meetings. The design of the meeting facility should consider accommodation of the following equipment items:

1. Projection system.

2. Screen or central display area.

3. Means for meeting participants to record proceedings of the meeting.

4. Microphone and speakers.

5. Two way communication facilities for participation of persons outside the module.

6. Audio and visual recording and playback equipment.

10.6.3 Meeting Facility Design Requirements

{A}

The following are design requirements for the meeting facility:

a. Size - The meeting facility shall accommodate a meeting of the entire space module crew.

b. Physical Arrangement - The meeting facility furnishings, seating, and restraints shall be easily repositioned for various meeting formats.

c. Acoustics - The acoustic environment of the meeting facility shall meet the requirements of Paragraph 5.4.3.2.2.1, Direct Voice Communication Noise Exposure Requirements.

d. Lighting - The lighting controls shall be capable of providing variable intensity lighting.

(Refer to Paragraph 8.13.3, Lighting Design Requirements, for requirements on specific lighting levels.)

e. Multi-Use - Meeting facilities which are to be utilized for other functions (e.g., dining) shall be carefully designed such that none of the intended uses shall be degraded through incorporation of the additional use capabilities.

(Refer to Paragraph 8.2.3.2., Dedicated Vs. Multipurpose Architectural Design Requirements for further multipurpose space requirements.)

10.6.4 Example Facility Design Solution

{O}

The Skylab wardroom table shown in Figure 10.6.4-1 served as a desk for paperwork and as a convenient meeting place (in addition to an eating surface). The wardroom table was approximately 100 cm (39 in) high and 120 cm (47 in) in diameter. Skylab crewmembers averaged approximately 50th percentile in most dimensions. It was found that the there was sufficient room to accommodate three crewmembers around the table. Crew members complained, however, about the height of the table. They felt that it should be raised to their chest level for both meeting and eating purposes.

10.7 RECREATION FACILITY

{A}

10.7.1 Introduction

{A}

This section covers the design of a space module recreation facility. The recreation facility considered in this section is a central facility for the full crew of the space module to use.

(Refer to Paragraph 10.4.2, Individual Crew Quarters Design Considerations, for information on recreational facilities in the individual crew quarters.)

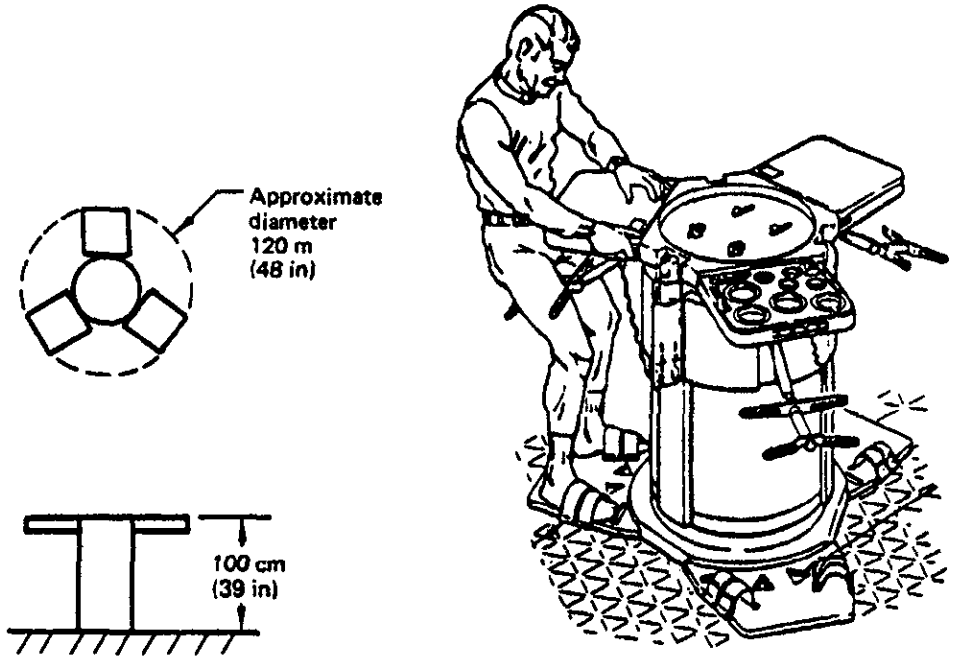

Reference 131, page 11

MSIS-344

Figure 10.6.4-1. Skylab Wardroom Table

10.7.2 Recreation Facility Design Considerations

{A}

The following are considerations to be made when designing a recreation facility for a space module:

a. Storage - There should be a location near the recreation facility for storage of games, books, audio-visual materials, and other recreational items. This storage location should have an inventory of the contents and instructions for the use of the recreational materials.

b. Size and Configuration - The exact size and configuration of the recreation facility will depend on the type of recreation scheduled. Figure 10.7.2-1 shows possible recreation activities and the impact of these activities on the facility design.

c. Selection of Recreation - The following are considerations for determining the type of recreation the facility will accommodate:

1. Antarctic studies - Studies made on the leisure activities of members of isolated Antarctic research station members are summarized in Figure 10.7.2-2.

2. Past space missions - Some of the favorite leisure activities of space mission crews are listed below:

a) Communications with friends and relatives on Earth.

b) Looking out a window at space and the Earth.

c) Listening to music.

Recreation activity	Design considerations	Reference paragraphs
Reading	Restraints or seating in isolated locations	8.13, 9.4.2.3.1.1
	Adequate illumination at reading surface	
	Quiet for concentration	5.4.3.2.3
	Storage area for books or other reading material	
Conversation	Comfortable furnishings arranged to promote social interaction	8.6.2.4
	Noise level below speech interference level	5.4.3.2.3
	Reduce illumination	8.13
	Proximity to galley	10.5
Observation	Proximity to windows	8.11
	Image enhancements (binoculars, telescope)	
	Reduced illumination	8.13
Visual entertainment (movies, tapes, etc.)	Variable illumination	8.13
	Visual entertainment equipment, storage areas, power supplies	
	Arrangement of restraints or seating for visibility	10.6.2
Games—active	Proximity to personal hygiene facilities	10.2
	Adjustable ventilation and thermal controls to accomodate increased activity	5.8
	Clear area and furnishing storage area	
	Padding	
	Storage area for games equipment (including personal protective gear)	
	Acoustical and dynamic isolation from sensitive areas of the module	5.4, 5.5, 8.3
Music listening	Audio generation equipment, storage location, power	
	Musical selecitons, storage location	
	Speakers (room or individual)	

Figure 10.7.2-1. Recreation Facility Design Considerations Based on Recreation Activity

Activity	Seabee Early	Seabee Late	Technical Administrative Early	Technical Administrative Late	Civilian Early	Civilian Late
Movies	1	1	1	1	1	1
Bull sessions (present job)	2	2	4	4	4	4
Bull sessions (past job)	5	4	5	3	6	7
Bull sessions (general)	12	12	10	10	8	8
Reading fiction	14	9	12	6	7	6
Reading biographies	20	17	20	16	20	15
Reading religious literature	16	18	17	20	16	19.5
Reading technical magazines	7	6	9	8	5	5
Studying courses	10	7.5	7	7	9	9
Ham radio	9	14	8	9	11.5	11
Writing letters	13	16	13	18	10	18
Physical exercise	19	15	15	12	15	10
Painting and drawing	17	20	16	17	17	19.5
"Happy Hour"	11	7.5	14	15	14	13
Cards	15	11	18	14	19	17
Chess or checkers	18	19	19	19	18	14
Pool or billiards	8	10	11	11	11.5	16
Classical music	6	13	6	13	2	3
Popular music	4	3	3	2	3	2
Western-country music	3	5	2	5	13	12
N	91	84	75	70	101	81

Reference: 316, page 133

Scale 1 to 20 with "1" denoting greatest preference

MSIS-346

Figure 10.7.2-2. Leisure Activities Among Antarctic Research Station Members. Rank Order of Activity Preference by Occupational Groups for Both Early and Late in the Mission

3. Crew preferences - The crew should be allowed to select their leisure activities from a wide variety of possibilities.

4. Microgravity games - Consideration should be given to providing supplies for game invention and experimentation in a microgravity environment. These games can boost crew morale and act as a motivator for exercise countermeasures.

d. Environmental Control - Active game areas will produce heat, perspiration, and debris. Ventilation and heating must control temperature and odor. In microgravity conditions this can become a complex problem. Heat will not dissipate from the body through thermal convection. Forced ventilation must be used. Perspiration and debris will not fall to the ground but must be collected and contained. Clothing might be used to collect perspiration. Debris such as hair and lint might have to be controlled through ventilation and filtration.

10.7.3 Recreation Facility Design Requirements

{A}

The following are the design requirements for a space module recreation facility:

a. Size - The facility shall be sufficiently large to accommodate all crewmembers scheduled for leisure activities.

b. Flexibility - The facility shall be capable of accommodating a wide range of recreational activities with a minimum of conversion and setup time. This includes rearrangement of furnishings, setup of recreational equipment, and adjustment of environmental controls.

c. Location - Recreational facilities shall be located where they do not conflict or restrict the activities of other space module functions and, conversely, they shall be located where the planned recreational activities are not compromised by other space module activities.

(Refer to Paragraph 8.3.3, Crew Station Adjacencies Design Requirements, for further requirements.)

d. Window - Where feasible, an outside viewing window shall be provided for recreational purposes.

e. Environment - Capability shall be provided to maintain the thermal environment within the requirements defined in Paragraph 5.8.3, Thermal Environment Design Requirements. A system shall be available to control debris and odors generated during recreational activities.

10.8 MICROGRAVITY COUNTERMEASURE FACILITY

{O}

10.8.1 Introduction

{O}

This section discusses the facilities used in a microgravity environment to combat the harmful effects of microgravity on the human body. The requirement for a microgravity countermeasure facility assumes that the mission duration will be 10 days or longer. The functional requirements and goals of the microgravity countermeasure facilities are discussed in Paragraph 7.2.3, Reduced Gravity Countermeasures.

(Refer to Paragraph 4.9, Strength, and Paragraph 4.10, Workload, for additional information on the detrimental physiological effects of microgravity.)

10.8.2 Microgravity Countermeasure Facility Design Consideration

{O}

A summary of the effects of microgravity on the human body, possible countermeasures, and considerations for the design of facilities to support these countermeasures is shown in Figure 10.8.2-1. The following is a further discussion of these considerations:

a. Mission Duration - This section assumes a mission duration of at least 10 days. For missions less than 10 days, an exercise facility is desirable for crew morale and well-being. The anticipated physiological decrements of a short mission can be countered by compensatory conditioning programs prior to the mission.

b. Multi Facility Function - The effects of microgravity can be counteracted in a number of different facilities in the space module, if such are equipped with appropriate countermeasures exercise equipment. The primary function of the microgravity countermeasure facility would be to serve as an area for exercise specific to countermeasure capability and for storage of this equipment.

Zero gravity effect	Possible countermeasures	Facility and equipment	Notes
Cardiovascular deconditioning	Low resistance, high freq. exercise of large muscle groups (aerobic exercise)	•Exercise device (aerobic ergometer) •Heart rate and metabolic monitoring system •Adequate ventilation, cooling •Timer •Diversion from boredom •Post exercise body wash	• Need volume for storage and use Heart rate and metabolic monitoring systems could be part of Space Medical Facility (see Para. 10.9). Heart rate monitoring should be routine; metabolic monitoring could be periodic (weekly). • (See Para. 10.2, Personal Hygiene)
		•Athletic games •Game equipment •Adequate ventilation, cooling •Post game body wash	• Could be in Recreation Facility (see Para. 10.7) • (See Para. 10.2, Personal Hygiene)
Fluid loss	Fluid loading prior to I-G entry	•Storage area for fluids and fluid administration supplies	•Could be part of Galley (see Para. 10.5) or Space Medical Facility (see Para. 10.9)
	Pharmaceuticals	•Storage area •Inventory system	•Would be part of Space Medical Facility (see 10.9)
Bone mineral loss	Skeletal loading through low frequency, high resistance exercise (anaerobic exercise)	•Exercise equipment •Centrifuge	•Need volume for storage and use •Considerable impact on vibration, dynamics, volume, and cost
	Pharmaceuticals	•Storage area •Inventory system	•Would be part of Space Medical Facility (see Para.10.9)
Disorientation; space adaptation syndrome; neuromuscular patterning not adapted to micro gravity; loss of one gravity neuro-muscular patterning Loss of muscle mass, strength and endurance	Psycho-motor exercise	•Padded surfaces •Mobility aids and restraints for practicing body movements and placement •Visual orientation cues	•Could be part of Recreational Facility (see Paragraph10.7)
	Pharmaceuticals	•Storage area •Inventory system	•Could be done in Health Facility (see Para. 10.9)
	Exercise of specific muscle groups; 1. Low frequency, high resistance anaerobic exercise. 2. High frequency, low resistance aerobic exercise (primary exercise)	•Exercise devices (both isotonic and isokinetic devices)	•Need volume for storage and use

Reference: 208, pages 265-280

MSIS-183 REV. A

Figure 10.8.2-1 Micro-Gravity Countermeasures Facility Design Considerations

c. Scheduling Capability - The microgravity countermeasure facility should have means to control the type and quantity of countermeasures administered to each crewmember. This would include a means to track the effects of the countermeasure and provisions for revising the countermeasure protocol and/or schedule.

d. Boredom and Crew Productivity - Microgravity countermeasures such as exercise may be boring because of a lack of mental stimulation. The following are ways in which a facility may reduce the boredom and increase the productivity of the crewmember:

1. Recreation facilities - Provide supplemental facilities for listening to music, news, video entertainment, etc.

2. Social interaction - Locate fixed countermeasure facilities near each other or near points where people are congregated to allow social interaction.

3. Workstation facilities - Add compatible workstation facilities to the countermeasure facilities so that the crewmember can perform productive work while undergoing countermeasure activities.

4. Mobile facilities - Some countermeasure facilities can be made mobile (such as the elasticized body suit) so that they may be used at other crew stations.

e. Facility Location - The following considerations should be made when locating a fixed facility within the space module:

1. Vibration and noise - Some exercise equipment is noisy and causes vibration. This equipment should be isolated from sensitive areas such as crew quarters or sensitive workstations.

2. Personal hygiene area - Post exercise whole or part body washing facilities should be close to the countermeasure facility.

3. Galley or potable water dispenser - Liquids should be available for crewmembers during strenuous exercise.

(Refer to Paragraph 8.3, Crew Station Adjacencies, for further information.)

f. Microgravity Considerations - The design of the countermeasure facilities should account for the effects of microgravity. Some of these considerations are listed below:

1. Drying of perspiration - Perspiration will not drip from the body but will pool on the body and then float into the atmosphere. Methods of eliminating perspiration before it has a chance to contaminate the module, such as absorptive clothing or a high flow level or dry air, should be investigated.

2. Convection cooling - In 1-G, warm air around the body will rise providing cooling. In microgravity this will not occur. Ventilation for cooling must be provided through forced air.

3. Debris containment - Debris, such as hair and lint, will not fall to the floor where it can be swept up. There must be a means, such as a vacuum system, to collect such material.

10.8.3 Microgravity Countermeasure Facility Design Requirement

{O}

The following equipment and facilities shall be available for all long duration missions in microgravity conditions.

10.8.3.1 Microgravity Countermeasures Equipment/Supplies Design Requirements

{O}

The microgravity countermeasure facility shall support the following countermeasure modalities:

a. Cardiovascular (aerobic and anaerobic exercise)

b. Muscle Performance (strength, power, and endurance of upper arm, forearm, thigh, lower leg, trunk).

c. Skeletal Maintenance

d. Non-Exercise Countermeasures:

1. Pressurized Countermeasures (i.e. LBNP).

2. Pharmacologic Countermeasures (i.e. oral rehydration and other pharmacological countermeasures).

3. Space Motion Sickness Countermeasures (i.e. prophylactic medicine).

10.8.3.1.1 Exercise Equipment

{O}

a. Strength Equipment - An isotonic strength mechanism (probably an ergometer), capable of imposing resistive forces of from 45 to 1335 N (10 to 300 lb), so that crewmembers can perform weight-lifting type exercises, shall be included

b. Aerobic Equipment - A minimum of one piece of aerobic exercise equipment shall be provided.

c. Anaerobic Equipment

d. Skeletal Muscle Equipment

10.8.3.1.2 Exercise Countermeasure Environment Design Requirements

{O}

The space module shall provide the following capabilities for the exercise facilities.

10.8.3.1.2.1 Resources

{O}

Cooling and Ventilation Capabilities to handle increased metabolic rates during exercise.

10.8.3.1.2.2 Additional Capabilities

{O}

The space module shall provide the following additional capabilities.

a. Noise and Vibration Control

b. Boredom/Motivation - Subsystems to minimize boredom and provide motivation.

c. Monitoring and Recording - Facilities for monitoring the extent of countermeasure utilization, the effects of the countermeasure, and the condition of the crewmembers.

d. Schedule and Prescription Adjustment - A means to adjust the countermeasure schedule and prescription based on the status of the crewmembers.

10.8.3.2 Non-Exercise Countermeasures

{A}

10.8.3.2.1 Non-Exercise Countermeasures Design Requirements

{O}

The following capabilities shall be provided:

10.8.3.2.1.1 Pressurized Countermeasures

{O}

a. Lower Body Positive Pressure - Lower body positive pressure devices for gravity protection during 1-g entry and landing.

b. Lower Body Negative Pressure - Lower body negative pressure device for use in microgravity in the prevention of orthostatic intolerance upon 1-g entry and landing and maintenance of overall cardiovascular conditioning

10.8.3.2.1.2 Pharmacological Countermeasure

{O}

a. Oral rehydration (fluid loading) to increase total fluid volume of the body, just prior to 1-g entry.

b. Other pharmacological countermeasures.

10.8.3.2.1.3 Space Motion Sickness Countermeasures

{O}

Prophylactic medications shall be provided for space motion sickness countermeasures.

10.8.3.3 Microgravity Countermeasures Program Administration Design Requirements

{O}

The following facilities shall be provided for administration of the countermeasure program:

a. Protocol - Provide the crewmembers with a protocol for application of the countermeasures.

b. Monitoring and Recording - Provide facilities for monitoring the extent of countermeasure utilization, the effects of the countermeasures and the condition of the crewmembers.

c. Schedule and Protocol Revision - Provide a means to adjust the countermeasure schedule and protocol based on the status of the crewmembers.

10.8.3.4 Countermeasure Monitoring Design Requirements

{O}

The following capabilities shall be provided for monitoring the microgravity countermeasure program.

a. Link With Medical Facility - Exercise devices shall have a real-time data link with the onboard medical facility.

b. Routine monitoring - The capability shall be provided to monitor the following parameters on a routine basis:

1) Heart rate.

2) Duration of exercise period.

3) Power output from instrumented exercise device.

c. Periodic monitoring - The capability shall be provided to monitor the following parameters on a periodic basis:

1) Electrocardiograph output - 12 Lead ECG.

2) Blood pressure - Automated indirect systolic and diastolic blood pressure.

3) Maximal and submaximal oxygen uptake ($V0_2$).

4) Muscle strength - Muscle strength measurement of major muscle groups.

10.8.3.5 Display Capabilities for Exercising Crewmembers Design Requirements

{O}

The following display capabilities shall be provided for exercising crewmembers:

a. Exercise Parameters - Display of exercise parameters (heart rate, elapsed time, power input).

b. Trend Data - Trend analysis comparisons of crewmember performance over time.

c. Text and Video Entertainment (crewmember choice).

10.8.4 Example Microgravity Countermeasures Design Solution

{O}

The following are example design solutions to the microgravity exercise requirements.

a. Strength Exercises - Several devices that utilize an electromagnetic brake or hydraulic mechanism to impose resistance equivalent to those of a 1-G environment have been developed. With a cable/pulley system and proper positioning, all major muscle groups of the body could be exercised (see Figure 10.8.4-1). The exercises include leg extensions, military press, bench press, sit-ups and back extensions, plus leg curls, and arm curls; these exercises constitute a workout for the major muscle groups of the body and should maintain the strength of the arm extensors and leg flexors (which the programs during Skylab 4 failed to do) as well as the arm flexors and leg extensors which were adequately maintained during Skylab 4. The abdominals and back extensors are included because of their importance as antigravity muscle groups for maintaining an erect posture in a 1-G environment. These are not adequately stressed by the natural body position assumed during microgravity exposure.

b. Aerobic Exercise Equipment - A bicycle ergometer similar to that used in the Skylab series (Reference 343) will provide aerobic exercise. It could be modified to include a video display terminal and computer programs (both commercially available) to simulate bicycle touring in Earth environments (e.g., through Yellowstone Park, coast-to-coast, hilly terrain, etc). Data storage, allowing each crewmember to keep performance and status records, should be included. These modifications, while not essential to the physiological performance, will greatly enhance the motivation to exercise and adherence to prescribed regimens.

c. Skeletal Loading Exercises - A treadmill similar to that used on Skylab 4 and the Shuttle could be provided as an adjunct to the other exercise equipment. Its principal attribute is as an impact device to potentially counter mineral loss in the long bones of the leg. Some crewmembers may prefer it over the bicycle ergometer for aerobic exercise. One is fully described in Reference 343.

10.9 SPACE MEDICAL FACILITY

{A}

10.9.1 Introduction

{A}

This section deals with the design of a Space Medical Facility (SMF). An SMF is any area that is set aside primarily for medical treatment of crew members. The requirement for an SMF assumes that the mission duration will be long term (in excess of 2 weeks) and that medical treatment outside the module is not immediately available. The information in this section applies to any gravitational environment, although some areas emphasize microgravity conditions and will so state. This section addresses both the environmental and physical requirements of the SMF.

(Refer to Paragraph 7.3, Medical Care, for information on the functional requirements and goals of an SMF.)

(Refer to Reference 363 for definitions of medical terms used in this section.)

Bench Press and Military Press

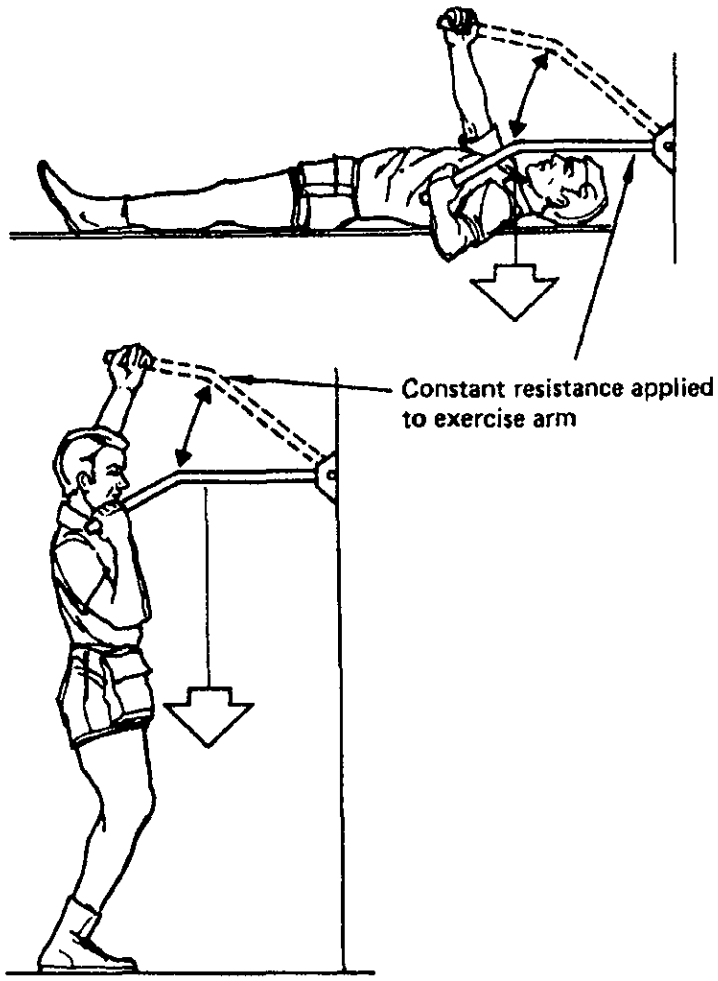

Leg Press

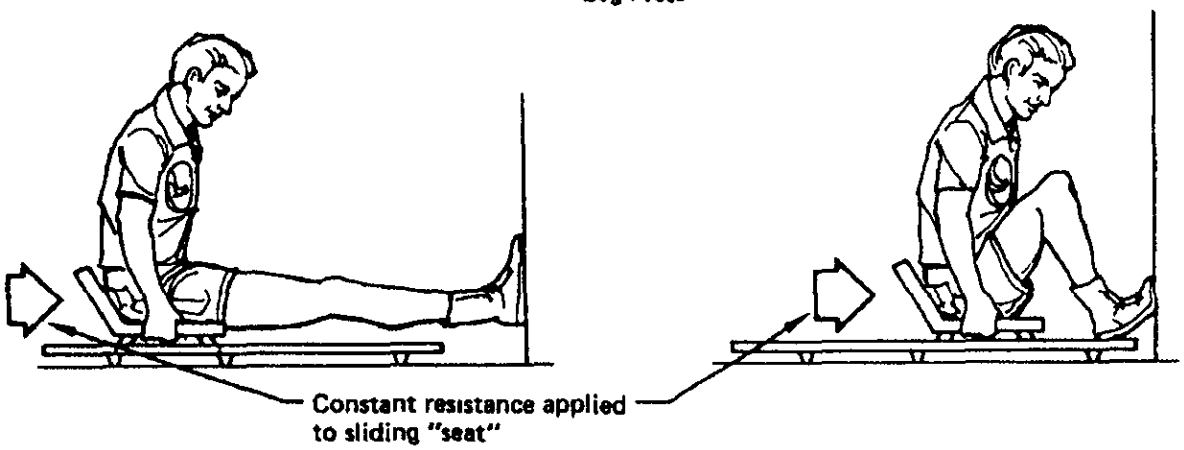

References: 241, all
351

MSIS-255
1 of 2

Figure 10.8.4-1 Example Muscular Strength Exercises (Continued)

Sit-Ups and Back Extensions

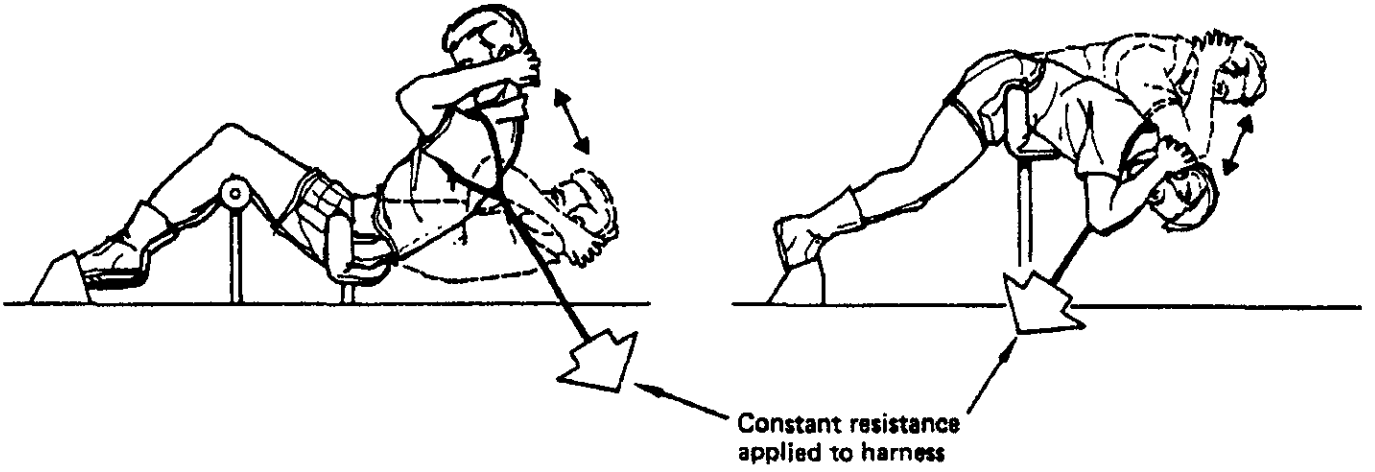

Lateral Pull and Variation

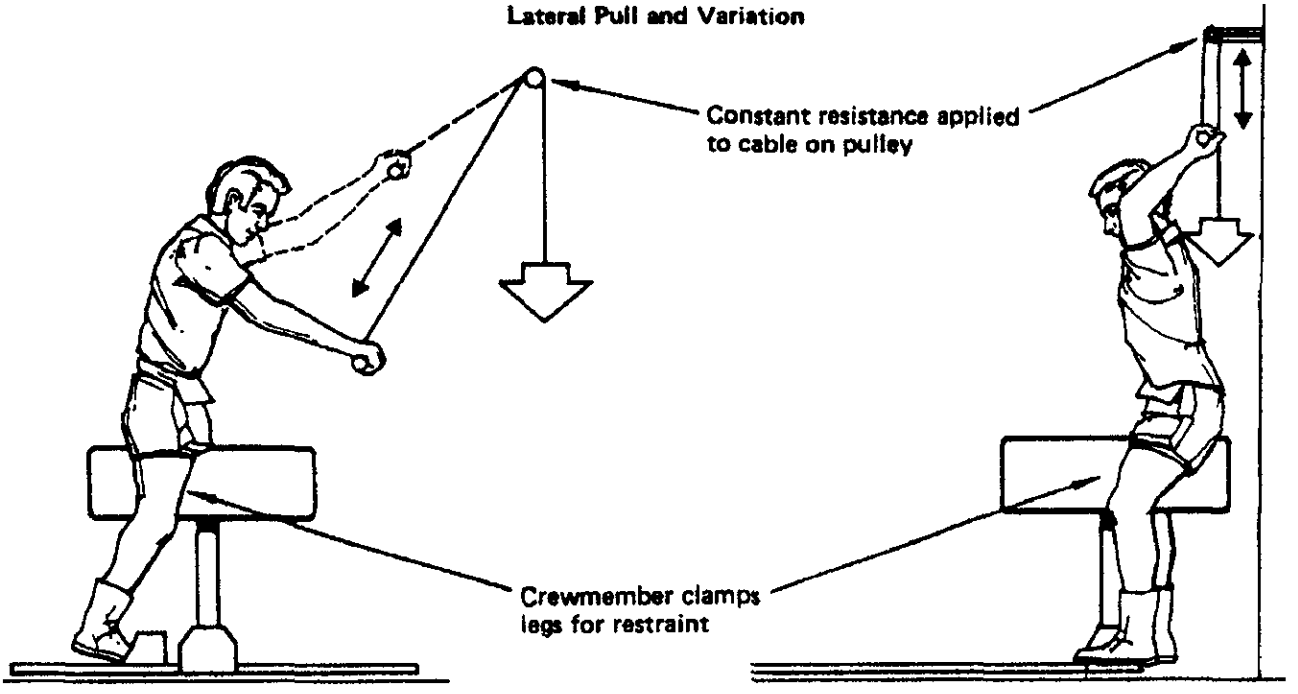

References: 241, all
351

MSIS-255
2 of 2

Figure 10.8.4.1-1 Example Muscular Strength Exercises (Concluded)

10.9.2 Space Medical Facility Design Considerations
{A}

10.9.2.1 Factors That Determine Health Care Needs Design Considerations
{A}

Prior to the design of the SMF the following information must be determined:

a. Duration of the Mission.

b. Crew Statistics - The health status, age, and number of crewmembers.

c. Mission Activities - The nature of the activities required during the missions.

d. Medical Support - The availability of medical support outside the module.

This information, together with historical data on the nature and frequency of illness and injuries, will determine the size of the SMF and the specific types of equipment required. Once these decisions are made, the detail design process can begin.

10.9.2.2 Functions of the SMF Design Considerations
{A}

The SMF must provide the equipment and supplies to perform the following functions:

a. Prevention.

b. Diagnosis.

c. Therapy.

Some of the equipment and supply items support two or all three of these functions. The relationship of the medical functions and the equipment/supplies is shown in Figure 10.9.2.2-1.

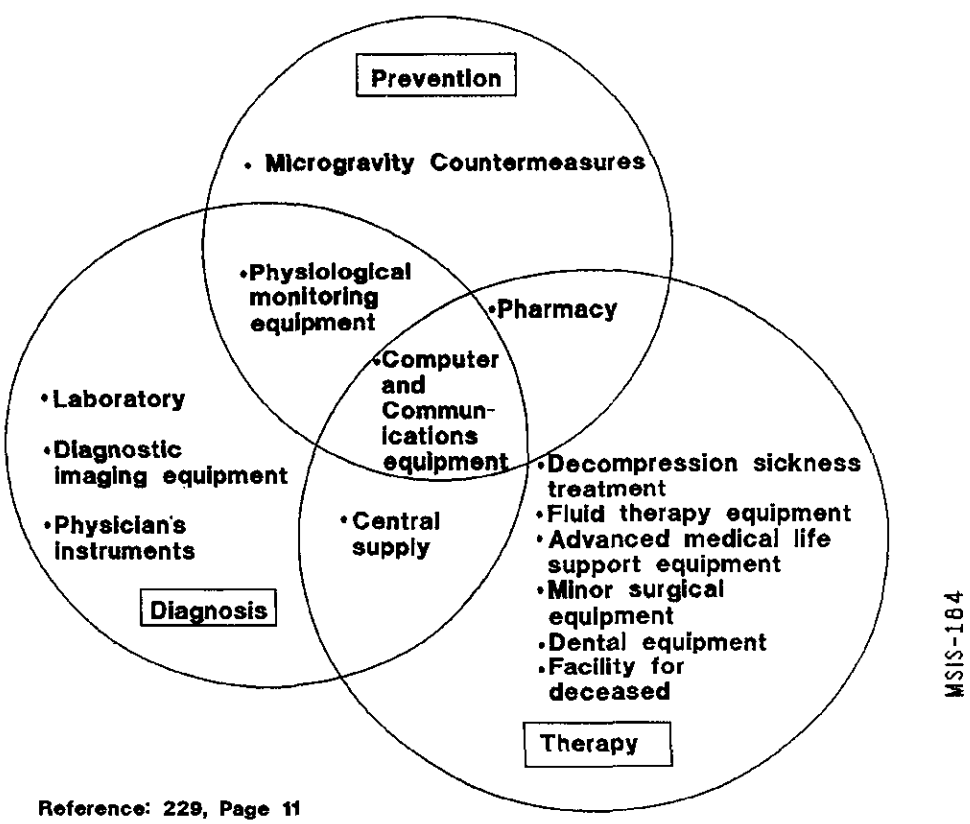

Figure 10.9.2.2-1 Functions and Equipment Related to the Space Facility

10.9.2.3 Crewmember Skills Design Considerations

{A}

The equipment in the SMF must be operable by the crewmembers. The final selection and design of the SMF equipment must be consistent with the medical training of the crew.

10.9.3 Space Medical Facility Design Requirements

{A}

A SMF is a dedicated space module area that shall be set aside primarily for medical treatment of crewmembers on long term missions. Some or all of the following capabilities will be required in any given program, and specific elements will be determined by mission duration, crew size and flight characteristics.

10.9.3.1 Medical Communications/Computing Design Requirements

{A}

The SMF shall meet the following environmental requirements:

a. Cleanliness - shall be capable of being cleaned and sanitized.

b. Lighting - shall meet requirements of 8.13.3.1.2-1 for specific medical tasks.

c. Privacy - shall be visually separable from the remainder of the space module.

d. Noise - noise levels shall meet the requirements defined in section 5.4.3.

10.9.3.2 Equipment Requirements

{A}

The SMF equipment shall be capable of the medical functions of diagnosis and monitoring, therapy, and prevention. Listed below are the equipment requirements.

10.9.3.2.1 Data Base and Communications Capability

{A}

A system shall be provided which can:

a. Manage and store medical information and crew health records.

b. Inventory of medical supplies and pharmaceuticals.

c. Two way voice and visual communications between the module and supplemental medical support facilities outside the module.

10.9.3.2.2 Environmental Monitoring Equipment

{A}

The SMF shall have the ability for real-time or near real-time monitoring for:

a. Particulate substances .

b. Microbial contamination of air, water, and surfaces.

c. Volatile contaminants of the atmosphere.

d. Potential water supply contaminants (Paragraph 7.2.2.3.2)

e. Module and biological radiation exposure.

10.9.3.2.3 Physiological Monitoring Equipment

{A}

The SMF shall have the following physiological monitoring capabilities:

a. Cardiovascular.

b. Pulmonary.

c. Metabolic.

d. Renal.

e. Muscular and skeletal.

f. Body Fluids.

10.9.3.2.4 Advanced Life Support

{A}

The SMF shall be capable of medical life support until definitive medical treatment can be administered or until stable or dead. Mechanical ventilator/respiratory support and pulmonary assessment equipment shall be included with the medical life support equipment.

10.9.3.2.5 Laboratory

{A}

The SMF laboratory shall be capable of monitoring and analyzing the following areas:

a. Hematology.

b. Clinical Chemistry.

c. Urine Analysis.

d. Microbiology.

10.9.3.2.6 Diagnostic Imaging

{A}

The SMF shall provide both a radiographic and nonradiographic imaging capability.

10.9.3.2.7 Countermeasures

{A}

The SMF shall provide the equipment necessary to counteract the effects of reduced gravity on the body. The countermeasures shall include:

a. Exercise equipment.

b. Physiologic monitoring equipment.

c. Pharmaceuticals.

d. Pressure devices to counteract the effect of fluid shifts in zero gravity.

(Further details on the microgravity countermeasure facilities are in Paragraph 10.8)

10.9.3.2.8 Surgery/Anesthesia Equipment

{A}

The SMF shall provide supplies and equipment to perform minor surgery.

10.9.3.2.9 Dental Care Equipment

{A}

The SMF shall contain equipment and supplies used to treat dental anomalies of a complexity up to and including tooth removal.

10.9.3.2.10 Intravenous Fluid Injection Supplies and Equipment

{A}

The SMF shall provide equipment for preparation and measured injection of:

a. Sterile water.

b. Fluids containing medications, electrolytes, or nutritional substances.

c. Blood or blood products.

10.9.3.2.11 Hyperbaric Treatment Facilities

{A}

The SMF shall have an air lock designed for compression therapy at up to 6 Atmospheres for treatment of decompression sickness and air embolism.

10.9.3.2.12 Pharmaceuticals

{A}

The SMF shall have sufficient pharmaceuticals and facilities for their stowage.

10.9.3.2.13 Central Supply

{A}

Miscellaneous medical equipment such as bandages, burn treatments, intravenous fluids, etc. shall be provided at a readily accessible central point.

10.9.3.2.14 Physician's Instruments

{A}

The SMF shall contain a transportable package of physician's instruments sufficient for the conduct of a routine diagnostic exam.

10.9.3.2.15 Safe Haven Medical Design Requirements

{A}

An area to which the crew can retreat and await rescue in the event of an emergency (safe haven) may be required for the space module. If a safe haven is required, the following are medical requirements that apply to the safe haven.

10.9.3.2.15.1 Nominal Operation Design Requirements

{A}

The safe haven shall have the following minimum operational capabilities for medical support while awaiting rescue:

a. Pharmacy.

b. Central supply.

c. Diagnostic exam.

d. Emergency airway equipment.

e. Mechanically powered intravenous production.

f. Administration capability.

g. Single deployable nonpowered exercise device (to be used only if primary exercise devices are not operational).

10.9.3.2.15.2 Contingency Operation Design Requirements

{A}

In the event the module containing the health care system is evacuated, and if time permits, transportable components of the health care system shall be capable of being relocated to the safe haven.

10.9.3.2.16 Facilities For Processing and Storage of a Deceased Crew Member

{A}

The facilities shall be humane and hygienically acceptable and shall be large enough to accommodate at least one crew member in an EVA suit.

10.10 LAUNDRY FACILITY

{A}

10.10.1 Introduction

{A}

This section discusses a facility to launder clothing, personal equipment (such as bedding), and rags, towels and washcloths for reuse. The section covers IVA clothing and equipment only.

(Refer to Paragraph 11.13.1, Clothing, for a discussion of clothing.)

10.10.2 Laundry Facility Design Considerations

{A}

The following are design consideration for space module laundry facilities:

a. Crew Productivity - Laundry processing is a potentially significant use of crew time and every effort should be made to reduce level of crew involvement. The following are means of reducing crew time:

1. Elimination of the need for pressing laundry.

2. Elimination of the need to sort laundry prior to washing due to different processing requirements.

3. Automation of the collection, processing, and distribution functions.

4. Use of disposable clothing.

5. Location of collection points in areas where the crew will normally change clothing.

b. Laundry Collection, Processing, and Distribution System - There are a number of different options for laundry collection, processing, and distribution. Each of these options require different human factors considerations. Some of the options and their human factors implications are listed below:

1. Central collection, processing, and distribution laundry area - This might save overall module volume but could result in loss of crew time to making daily trips to the laundry area.

2. Several small collection points and central processing and distribution area - This would increase module volume devoted to the laundry function but may improve crew efficiency. An automated transfer of dirty laundry (through conveyor or piping system) would further increase crew efficiency.

3. Several small collection, processing, and distribution areas - Would save crew time in collection and distribution but may require more volume and more crew time in actual laundry processing.

c. System Capacity - Clothing types and laundering frequency rates are estimated in Figure 10.10.2-1. These rates and the size of the crew can be used to estimate the required capacity of the laundry system. Additional laundry capacity will be required for towels, washcloths, bedding, etc. Laundering of these items will depend on the design of the personal hygiene facility, use of disposable materials, housekeeping techniques, etc. Once the system is sized, procedures will have to be established to ensure the laundering frequency does not exceed the system capacity.

d. Noise - Laundry facilities are a potential source of high noise levels. They must be isolated or insulated as required to ensure that the noise requirements in Paragraph 5.4 are met.

10.10.3 Laundry Facility Design Requirements

{A}

The laundry facility shall meet the following design requirements:

a. Cleaning Solvents and Soaps - The laundry cleaning solvents and soaps shall comply with the following requirements:

1. Facilities and processes shall ensure that cleaning solvents and soaps shall not endanger or irritate the crew in any manner.

2. Cleaning solvents and soaps shall be compatible with space module waste processing and recycling systems.

Item	Estimated mass grams (oz)	Estimated laundering frequency
Shirt	110 (4)	1 per 2 days
Jacket	370 (13)	1 per 14 days
Trousers	370 (13)	1 per 7 days
Shorts or panties	57 (2)	1 per day
T-shirt of brassiere	40 (1.5)	1 per day
Socks	14 (.5)	1 per day
Handkerchief	7 (.25)	1 per 2 days
Sleep/gym shorts	85 (3)	2 per 7 days
Sleep/exercise shirt	110 (4)	2 per 7 days
Slipper socks	85 (3)	1 per 90 days

Reference: 107, pages 6-3 & -4
139, page B-17

MSIS-219

Figure 10.10.2-1. Estimated Laundering Frequency for Clothing Items

3. If water is used as a solvent, it shall meet the quality requirements of personal hygiene water as shown in Figure 7.2.5.3.6-1.

b. Methods shall be provided to extract cleaning solvents from the laundered items.

c. Disinfection - The capability for disinfection of laundry shall be provided.

d. Receptacles - Receptacles for items to be washed shall be well ventilated to minimize the accumulation of odor and growth of micro-organisms.

e. Distribution of Laundered Items - Laundry collection and distribution systems shall provide a system to properly track, sort, and distribute laundered items.

f. Human Interface - The facility shall be designed to be operated by the full size and strength range of the space module crew.

(Refer to Paragraph 3.3.1.3, Body Size Data and Paragraph 4.9.3, Strength Design Requirements.)

g. Contamination - The laundry facility shall incorporate features to prevent contamination of the module atmosphere from by-products such as soaps, water, lint, etc.

h. Restraints - Appropriate restraints shall be provided for use in microgravity conditions.

(Refer to Paragraph 8.9.3, Mobility Aids and Restraints Design Requirements, and Paragraph 11.7.3, Equipment Restraints, for specific restraint requirements.)

10.11 TRASH MANAGEMENT FACILITY

{A}

10.11.1 Introduction

{A}

This section discusses the design of the space module trash management facility and equipment. In this document includes both biologically active and inactive materials. It does not include metabolic/body wastes. Body waste management is discussed in Paragraph 10.3, Body Waste Management Facilities.

(Refer to Paragraph 13.2, Housekeeping, for related information.)

10.11.2 Trash Management Facility Design Considerations

{A}

The following are considerations for the design of the space module trash management facilities.

a. Quantity and Nature of Trash - The amount and nature of the trash will depend on the nature of the mission and the design of the space module. All wrappings, etc., should be minimized and disposables chosen for maximum efficiency and minimum residual. Some of the variables are listed below:

1. Number of crewmembers.

2. Disposable versus reusable items (clothing, utensils, etc.).

3. Mission duration.

4. Type of work performed (experimentation, processing, manufacturing, etc.).

b. Separation - The system may require separation of biologically active and inert trash in order to facilitate stowage and disposal. The crew may have to participate in this function.

c. Location of Trash Receptacles - The selection of trash receptacle types and locations must consider crew productivity. Several small throughout the module may initially save crew time but will cost time if the crew must gather the trash from the receptacles and transport it to a central receptacle.

d. Productivity - Trash management is not a productive crew function. Every effort should be made to automate trash management, reduce volume by compaction, and reduce manual manipulation.

e. Human Interface - The following considerations should be made when designing the trash collection devices and receptacles:

1. All equipment should be operable by the full range of crewmember size and strength.

2. Appropriate restraints should be available in microgravity conditions.

3. All trash handling supplies (wipes, bags, wrapping tape, labels, etc.) should be located so that they are easily accessible.

4. Noise generation equipment (e.g., compactors) should be insulated or isolated from noise sensitive areas.

10.11.3 Trash Management Facility Design Requirements

{A}

The following are the design requirements for trash management from the source to the disposal area:

a. Trash Sorting - Where it is necessary to sort trash before depositing in a receptacle, the following requirements shall be met:

1. Receptacle labeling - Each of the receptacles shall be appropriately labeled defining acceptable and non-acceptable trash.

2. Transfer package labeling - If trash must be transferred from one receptacle to another, there shall be a method of identifying the trash so that it is placed in the proper receptacle.

3. Human error - The system shall be capable of recovery in the event that trash is inappropriately placed in a receptacle.

b. Trash Receptacles:

1. Identification of receptacles - All trash receptacles shall be clearly identifiable.

2. Receptacle location - The location of trash receptacles shall meet the following requirements:

a) The location shall effectively reduce trash in the crew stations.

b) The location shall minimize crew trash handling time.

c) The location shall not interfere with crew movement.

c. Odor and Contamination Control - The following requirements apply to control of odor and contamination:

1. Trash handling equipment shall be designed to preclude module contamination during introduction of trash.

2. Trash storage areas shall preclude contamination of the living environment by harmful microorganisms or odor.

3. The trash management equipment area shall be capable of being cleaned and sanitized.

4. There shall be a safe means for disposal of any harmful chemical or radioactive wastes.

d. Operation - All trash collection, handling, and disposal equipment shall be capable of being operated by the full size and strength range of the defined crewmember population.

(Refer to Paragraph 3.3.1, Body Size, and Paragraph 4.9.3, Strength Design Requirements, for additional requirements.)

e. Receptacle Capacity - Crewmembers shall be capable of easily determining the level of trash (in relationship to capacity) in each of the trash receptacles.

10.12 STOWAGE FACILITY

{A}

10.12.1 Introduction

{A}

This section covers the overall layout and location of dedicated stowage facilities inside the space module. A storage facility can be integrated with a crew station or may be a separate area apart from the normally occupied areas.

Discussion of stowage hardware can be found in the following paragraphs:

11.3, Drawers and Racks

11.4, Closures

11.5, Mounting Hardware

11.6, Handles and Grasp Areas

11.9, Fasteners

11.12, Packaging

10.12.2 Stowage Facility Design Considerations

{A}

The following are considerations for the design of a stowage facility.

a. Facility Type and Location - Items should be stored in an area as close as possible to where they are used. The following is a list of crew stations and the type of equipment that should be stored adjacent to these stations:

1. Individual crew quarters - Clothing, personal equipment and belongings, personal hygiene supplies (see Paragraph 10.4).

2. Workstation - Writing equipment, film, camera equipment, recording equipment, emergency equipment (extinguisher, first aid equipment, etc.).

3. Personal hygiene facilities - Tissues, wipes, towels, soaps (see Paragraph 10.2).

4. Galley and wardroom - Food, recipes, utensils, wipes, tissues (see Paragraph 10.5).

5. Recreation facilities - Games, reading materials, audio-visual equipment (see Paragraph 10.7).

6. Meeting facility - Writing materials, presentation aids (see Paragraph 10.6).

7. Space medical facility - Medical equipment, pharmaceuticals, dispensary supplies (see Paragraph 10.9).

8. Microgravity countermeasure facility - Exercise and countermeasure equipment (see Paragraph 10.8).

9. Body waste management facility - Wipes, specimen containers (see Paragraph 10.3).

10. Trash Management - (See Paragraph 10.11).

b. Environment - The environment of the storage area must not only be compatible with the stored items, but should be habitable by a crewmember that must unstow, restow, stock, and maintain the facility.

c. Flexibility - The stowage facility must change as the module mission and size changes. Features of the stowage facility that will accommodate change are listed below:

1. Standardized container and container cover size and design.

2. Adjustable shelving and racks.

3. Bolted or strapped storage racks and containers.

4. Inventory management system that can be easily updated. (See Paragraph 13.3).

5. Provisions for stowage facility installation throughout the space module.

d. Security - Some stowage areas such as sensitive experimentation will require security measures. The designer should consider the incorporation of locks and security systems.

e. Central Storage Versus Distributed Storage - Ideally items would be stored adjacent to their use point. There are cases however where this is impractical. A central storage point for some items makes inventory tracking a simpler task. This might include low use items or items which are used in many different stations. In many cases a central storage and distributed storage system can be combined. This might occur in the galley where food for a single meal is stored in a pantry but the entire food supply is stored in a central facility.

(Refer to Paragraph 13.3, Inventory Control, for additional information.)

f. Facility Entrance and Exit - The entrance and exit to the stowage facility should be designed for the crewmember carrying the stowed items. The following considerations should be made:

1 . Size - The size of the door or hatch opening should allow passage of the crewmember plus the stored items. This includes quantities required to restock the facility.

2. Controls and Retaining Devices - Environmental controls such as light switches and storage clamps and straps should be operable by a crewmember carrying the stowed items.

10.12.3 Stowage Facility Design Requirements

{A}

The following are design requirements for space module stowage facilities:

a. Location - The following are requirements for the location of stowage areas:

1. Proximity - Items shall be stored as close as possible to their point of use.

2. Safety - Hazardous items shall be stored away from heat or ignition sources and away from crew congregation areas.

3. Interference - Stowage facilities shall not interfere with normal or emergency crew operations.

b. Accessibility :

1. Stored items shall be accessible by the defined size range of the space module crew.

(Refer to Paragraph 3.3.1, Body Size, for additional information.)

2. Removal of a stored item shall not require removal of another, unrelated item.

c. Labeling and Coding - Stowage locations and items shall be coded to allow for location, replacement, or inventory of items. The coding system shall allow modification.

(Refer to Paragraph 9.5.3, Labeling and Coding Design Requirements, for additional requirements.)

d. Environment:

(Refer to Section 5.0, Natural and Induced Environments, and Paragraph 8.13.3, Lighting Design Requirements, for habitability and lighting requirements of stowage areas that require human occupation.)

e. Hand Operation - Stowage retainers shall be designed to be operated by hand; no tools shall be required.

f. Commonality - Latching devices, containers, and container covers shall have design commonalty throughout all space module stowage facilities.

g. Inventory Management - The stowage facility shall be compatible with the space module inventory management system.

(Refer to Paragraph 13.3.3, Inventory Control Design Requirements, for additional information.)

h. Retention Devices - Stowage items shall be secured within the container such that the item remains in the container/enclosure when the container is opened. Removal of retention devices shall not release other items which are not required.

Table of Contents

		Page
11.0	**HARDWARE AND EQUIPMENT**	**11-1**
11.1	**INTRODUCTION**	**11-1**
11.2	**TOOLS**	**11-1**
11.2.1	Introduction	11-1
11.2.2	Tool Design Considerations	11-1
11.2.2.1	Power Tools Design Considerations	11-2
11.2.2.2	Body Stabilization When Using Tool Design Considerations	11-2
11.2.3	Tool Design Requirements	11-3
11.2.3.1	Hand and Tool Integration Design Requirements	11-3
11.2.3.1.1	Tool Handgrip Size and Shape Design Requirements	11-3
11.2.3.1.2	Tool Handedness Design Requirements	11-3
11.2.3.1.3	Tool Actuation Forces and Direction of Action Design Requirements	11-4
11.2.3.2	Tool Commonality Design Requirements	11-4
11.2.3.3	Tool Tethering/Retention Design Requirements	11-4
11.2.3.4	Tool Stowage Design Requirements	11-5
11.2.3.5	Tool Labeling and Identification Design Requirements	11-5
11.2.3.6	Tool Access Design Requirements	11-5
11.2.3.7	Special Tool Features Design Requirements.	11-7
11.2.4	Example Tool Design Solutions	11-7
11.2.4.1	Example Manual Tools	11-7
11.2.4.2	Example Power Tools	11-9
11.3	**DRAWERS AND RACKS**	**11-9**

11.3.1 Introduction 11-9

11.3.2 Drawer and Rack Design Considerations 11-9

11.3.3 Drawer and Rack Design Requirements 11-13

11.3.3.1 Drawer and Rack Interfacing Requirements 11-13

11.3.3.2 Design Requirements Common to Both Stowage and Equipment Drawers 11-15

11.3.3.3 Stowage Drawer Design Requirements 11-16

11.3.3.4 Equipment Drawer Design Requirements 11-16

11.4 CLOSURES AND COVERS 11-16

11.4.1 Introduction 11-16

11.4.2 Closures and Covers Design Considerations 11-17

11.4.3 Closures and Covers Design Requirements 11-17

11.4.4 Example Closures and Covers Design Solutions 11-18

11.5 MOUNTING HARDWARE 11-18

11.5.1 Introduction 11-18

11.5.2 Mounting Hardware Design Considerations 11-18

11.5.3 Mounting Hardware Design Requirements 11-18

11.5.3.1 General Mounting Design Requirements 11-18

11.5.3.2 Alignment Devices Design Requirements 11-19

11.5.4 Example Mounting Hardware Design Solutions 11-20

11.6 HANDLES AND GRASP AREAS (FOR PORTABLE ITEMS) 11-20

11.6.1 Introduction 11-20

11.6.2 Handle and Grasp Area Design Considerations 11-21

11.6.3 Handle and Grasp Area Design Requirements 11-22

11.6.3.1 General Handle and Grasp Area Design Requirements 11-22

11.6.3.2 Handle and Grasp Area Location Design Requirements 11-22

11.6.3.3 Nonfixed Handles Design Requirements 11-22

11.6.3.4 Handle Dimensions Design Requirements 11-23

11.7 RESTRAINTS 11-24

11.7.1 Introduction 11-24

11.7.2 Personnel Restraints 11-24

11.7.2.1 Introduction 11-24

11.7.2.2 Personnel Restraints Design Considerations 11-24

11.7.2.3 Personnel Restraints Design Requirements 11-25

11.7.2.3.1 General Personnel Restraints Design Requirements 11-25

11.7.2.3.2 Foot Restraint Design Requirements 11-25

11.7.2.3.2.1 General Foot Restraint Design Requirements 11-25

11.7.2.3.2.2 Foot Restraint Donning/Doffing Design Requirements 11-26

11.7.2.3.2.3 Foot Restraint Loads Design Requirements 11-26

11.7.2.3.2.4 Foot Restraint Durability and Color Design Requirements 11-27

11.7.2.3.3 Body Restraint Design Requirements 11-27

11.7.2.3.3.1 Body Restraint Donning/Doffing Design Requirements 11-27

11.7.2.3.3.2 Body Restraint Loads Design Requirements 11-27

11.7.2.3.3.3 Body Restraint Finish and Color Design Requirements 11-28

11.7.2.3.3.4 Body Restraint Dimensional Design Requirements 11-28

11.7.2.3.4 Sleep Restraints Design Requirements 11-28

11.7.2.4 Example Personnel Restraint Design Solutions 11-28

11.7.3 Equipment Restraints 11-31

11.7.3.1 Introduction 11-31

11.7.3.2 Equipment Restraint Design Considerations 11-31

11.7.3.3 Equipment Restraint Design Requirements 11-31

11.7.3.4 Example Equipment Restraint Design Solutions 11-33

11.8 MOBILITY AIDS 11-35

11.8.1 Introduction 11-35

11.8.2 Personnel Mobility Aids 11-35

11.8.2.1 Handhold and Handrail Design Considerations 11-35

11.8.2.2 Handhold and Handrail Design Requirements 11-35

11.8.2.2.1 Handhold and Handrail Dimensions Design Requirements 11-35

11.8.2.2.2 Handhold and Handrail Coding Design Requirements 11-36

11.8.2.2.3 Handhold and Handrail Finish Design Requirements 11-36

11.8.2.2.4 Handhold and Handrail Design Loads Design Requirements 11-37

11.8.2.2.5 Handhold and Handrail Temperature Design Requirements 11-37

11.8.2.2.6 Handhold and Handrail Mounting Design Requirements 11-37

11.8.3 Equipment Mobility Aids 11-37

11.8.3.1 Equipment Mobility Aid Design Considerations 11-37

11.8.3.2 Equipment Mobility Aid Design Requirements 11-38

11.8.3.3 Example Mobility Aids Design Solutions 11-38

11.9 FASTENERS 11-38

11.9.1 Introduction 11-38

11.9.2 Fastener Design Considerations 11-39

11.9.3 Fastener Design Requirements 11-42

11.9.3.1 General Fastener Design Requirements 11-43

11.9.3.2 Hand-Actuated Fastener Design Requirements 11-44

11.9.3.3 Tool-Actuated Fastener Design Requirements 11-45

11.9.3.4 IVA Fastener Design Requirements 11-45

11.9.4 Example Fastener Design Solutions 11-46

11.10 CONNECTORS 11-46

11.10.1 Introduction 11-46

11.10.2 Connector Design Considerations 11-46

11.10.3 Connector Design Requirements 11-47

11.10.3.1 Fluid Connectors Design Requirements 11-47

11.10.3.2 Electrical Connectors Design Requirements 11-47

11.10.3.3 Structural Connectors Design Requirements 11-48

11.10.3.4 Optical Connectors Design Requirements 11-48

11.10.3.5 Connector Identification Alignment Design Requirements 11-48

11.10.3.6 Connector Arrangement Design Requirements 11-49

11.10.4 Example Connector Design Solutions 11-51

11.11 WINDOWS 11-53

11.11.1 Introduction 11-53

11.11.2 Window Design Considerations 11-53

11.11.2.1 Optical Characteristics Design Considerations 11-53

11.11.2.2 Visual Protection Design Considerations 11-53

11.11.2.3 Physical Protection Design Considerations 11-54

11.11.2.4 Window Maintenance Design Considerations 11-54

11.11.3 Window Design Requirements 11-54

11.11.3.1 General Viewing Window Requirements 11-55

11.11.3.1.1 Window Size 11-55

11.11.3.1.2 Surface Reflections 11-55

11.11.3.1.3 Optical Characteristics 11-55

11.11.3.1.4 Optical Density 11-55

11.11.3.1.5 Surface Quality 11-55

11.11.3.1.6 Bubbles, Seeds 11-56

11.11.3.1.7 Visual Protection Design Requirements 11-56

11.11.3.1.8 Physical Protection Design Requirements 11-56

11.11.3.1.9 Window Maintenance Design Requirements 11-57

11.11.3.2 Scientific Window Design Requirements 11-57

11.11.3.2.1 Window Glass Requirements 11-57

11.11.3.2.1.1 *Materials Requirements* 11-57

11.11.3.2.2 Optical Requirements 11-57

11.11.3.2.3 Transmittance 11-58

11.11.3.2.4 Reflectance 11-58

11.11.3.3 Visual Protection Design Requirements 11-58

11.11.3.4 Physical Protection Design Requirements 11-60

11.11.3.5 Window Maintenance Design Requirements 11-60

11.11.3.6 *Window Glass Systems* 11-61

11.11.3.6.1 Other Windows 11-61

11.11.4 Example Window Design Solutions 11-61

11.12 PACKAGING 11-61

11.12.1 Introduction 11-61

11.12.2 Packaging Design Considerations 11-61

11.12.3 Packaging Design Requirements 11-62

11.13 CREW PERSONAL EQUIPMENT 11-63

11.13.1 Clothing 11-63

11.13.1.1 Introduction 11-63

11.13.1.2 Clothing Design Considerations 11-64

11.13.1.2.1 Preliminary Clothing Design Considerations 11-64

11.13.1.2.2 Disposable vs Reusable Clothing 11-64

11.13.1.2.3 Frequency of Clothing Change 11-64

11.13.1.3 Clothing Design Requirements 11-64

11.13.1.3.1 General Clothing Design Requirements 11-64

11.13.1.3.2 Clothing Packaging and Storage Design Requirements 11-65

11.13.1.4 Example Clothing Design Solutions 11-66

11.13.2 Personal Ancillary Equipment 11-66

11.13.2.1 Introduction 11-66

11.13.2.2 Personal Ancillary Equipment Design Considerations 11-66

11.13.2.3 Personal Ancillary Equipment Design Requirements 11-66

11.13.2.4 Example Personal Ancillary Equipment Design Solutions 11-67

11.14 CABLE MANAGEMENT 11-67

11.14.1 Introduction **11-67**

11.14.2 Cable Management Design Considerations 11-67

11.14.3 Cable Management Design Requirements 11-67

11.14.4 Example Cable Management Design Solutions 11-68

11.0 HARDWARE AND EQUIPMENT
{A}

11.1 INTRODUCTION
{A}

This section provides the design considerations, requirements, and examples for the following hardware and equipment:

Tools Paragraph 11.2

Drawers and Racks Paragraph 11.3

Closures and Covers Paragraph 11.4

Mounting Hardware Paragraph 11.5

Handles and Grasp Areas Paragraph 11.6

Restraints Paragraph 11.7

Mobility Aids Paragraph 11.8

Fasteners Paragraph 11.9

Connectors Paragraph 11.10

Windows Paragraph 11.11

Packaging Paragraph 11.12

Crew Personal Equipment Paragraph 11.13

Cable Management Paragraph 11.14

11.2 TOOLS
{A}

11.2.1 Introduction
{A}

This section includes the criteria for manual and power tools. It provides tool design requirements for normal operations and for planned and unplanned/contingency maintenance activities. Launch, entry, and temporary tool stowage requirements are also included along with examples of tool design solutions.

(Refer to Paragraph 14.6.2, EVA Tools, for EVA-unique tool considerations and requirements.)

(Refer to Paragraph 12.3.2, Testability Design Requirements for information relevant to electronic and analytical test tools.)

11.2.2 Tool Design Considerations
{A}

Development of inflight maintainable spacecraft systems must include consideration of tool selection, transport, stowage, ease of use, and criticality.

A satisfactory tool complement for future missions should include consideration of the following factors:

a. Tool Kit Contents - A tool kit should contain all the tools normally found in a tool collection for comprehensive usage as well as special tools required for special aerospace hardware. A standard tool kit should be developed that is based on known system requirements as well as past experience. This tool kit should include multi-purpose/multi-size tools. Despite the urge to reduce tool kit weight by not including sockets, wrenches, etc., that have no identified requirements, crewmembers have requested that all sizes be included as there are always unexpected needs that arise for the tool that was left behind.

b. Tool Transfer/Retention Device - A tool caddy should be provided to carry/translate tools from place to place and should be easily secured at the workstation. Transparent materials would be desirable so that the tools can be seen inside the caddy. Internal retention provisions are necessary to allow the crewmember to temporarily stow and retrieve small parts and equipment while the work is being done since containing and locating this equipment is a problem in microgravity.

c. Tool Commonality/Cost-effectiveness - A survey of previous tool development activities should be conducted prior to initiating costly tool development for suitable tools that are already in the inventory.

d. Tool Stowage Location - The stowage location of tool kits should be optimized for accessibility to workstations and maintenance workbenches.

e. Tool Unit Standards - Both English and metric standards must be accommodated in the tool kits. Some coding system on the tool should be used to readily distinguish English from metric.

f. Tool Inventory Control - Tools should be identifiable by the automated inventory control system.

(Refer to Paragraph 13.3, Inventory Control for specific inventory control design considerations and requirements.)

11.2.2.1 Power Tools Design Considerations

{A}

Power tools must meet the same design requirements as manual hand-tools regarding operability. Power tools should be used to accomplish repetitive manual tasks, such as disengaging captive fasteners or operating mechanical drive systems. Use of power tools offers enormous returns in reduced crewmember time and effort and ease of operation.

(See Paragraph 14.6.2, EVA Tools, for design considerations pertaining to power tools used in an EVA environment.)

Power tools subject the crewmember to specific hazards and stresses that should be considered. Specific considerations include rotating components, electrical shock, heat generation, flying particles or sparks, inadvertent power activation, and hazards to the non-operating hand. Power tool design should avoid the use of brush type motors since they may create hazardous EMI (electromagnetic interference) and provide an ignition source.

(Refer to Paragraph 6.4, Electrical Hazards, for electrical safety design considerations and requirements.)

Some types of tools create unique problems. Typical of these are soldering tools, which can cause burns if the operator touches a tip that is still hot or lays the tool on flammable materials.

It should be noted that the standard practice has been to accept many of the above hazards as part of the job and to place the burden of protection on users, i.e., to recommend wearing eye protectors, using special electrical grounding devices, wearing gloves, etc. In many cases these are the only methods available to reduce the hazard potential. However, the designer should, in each new tool design, review such hazards and attempt to remove them whenever possible in the design. When this cannot be accomplished, the designer should assume the responsibility for providing appropriate warning labels on the tool and/or include properly worded warning instructional materials with the tool. The designer should know better than anyone else what hazards a new tool presents.

(Refer to Paragraph 6.2, General Safety, for more detailed safety design considerations.)

For rechargeable battery-powered tools, the inventory of spare power packs and the location of recharge stations are important design considerations.

11.2.2.2 Body Stabilization When Using Tool Design Consideration

{A}

Previous orbital missions have indicated that, when properly restrained, the crewmembers can perform most manipulative operations on orbit using standard tools as effectively as these operations can be performed in an Earth environment. In many

in-space maintenance operations, this adequate restraint was not anticipated in the design of the equipment. This led to a lot of wasted time and crew frustration. Therefore, it is very important that adequate interface designs (i.e., designing the payload for EVA and IVA servicing), adequate body restraints, and a moderate complement of hand tools be provided so space system servicing requirements can be met.

(Refer to Paragraph 12.0, Design for Maintainability, for general and specific requirements for designing payloads for servicing.)

(Refer to Paragraph 9.2.4.2.3, Workstation Restraints and Mobility Aids, and to Paragraph 14.4.3, EVA Workstations and Restraints, for specific requirements related to integrating restraints and workstations.)

11.2.3 Tool Design Requirements

{A}

The tool design requirements in the following subsections apply to tools that are intended to be used to activate, operate, maintain, and deactivate manned and unmanned equipment in both EVA and IVA environments.

(Where there are EVA-unique tool design requirements, they are so noted with reference to Paragraph 14.0.)

11.2.3.1 Hand and Tool Integration Design Requirements

{A}

11.2.3.1.1 Tool Handgrip Size and Shape Design Requirements

{A}

Power and manual hand tools shall comply with the following handgrip size and shape requirements:

(Refer to Paragraph 6.5.3, Touch Temperature Design Requirements for specific touch temperature criteria.)

a. Gripping Surface - Hand gripping surfaces that minimize abrasion to the EVA glove material shall be provided on handles of tools.

b. Sleeve Type Adapters - If sleeve-type handle cover adaptors are used, they shall be adequately secured so they will not slip, rotate, or come off.

c. Orientation - Tool handles shall be oriented to allow the operator's wrist to remain in the most natural position while force or guidance inputs are applies.

d. Auxiliary Controls - If an auxiliary control on the tool must be manipulated while the operator is holding the tool, the control shall be located where:

1. The thumb or finger of the holding hand can manipulate the control without disturbing the tool/fastener holding position.

2. Unintentional or inadvertent control operation is impossible.

11.2.3.1.2 Tool Handedness Design Requirements

{A}

The following requirements apply to handheld manual tools and handheld power tools:

a. Tool Operation - All general purpose hand tools shall be one-handed operable in-so-far as practical.

b. Tool Installation/Alignment - One hand only shall be required for tool installation and alignment.

c. Tool Handle Design - Tool handles shall be designed to allow the operator to use either the left or right hand.

11.2.3.1.3 Tool Actuation Forces and Direction of Action Design Requirements

{A}

All hand tools shall comply with the following:

a. Actuation Force - Hand tools shall require an actuation force of less than 89N (20 lbs) or a torque of less than 15 Nm (11 ft-lbs).

b. Throw Angles - Ratcheting tools shall be capable of providing torque with a minimum throw angle of 45 degrees.

c. Plier-Type Tools - Plier-type tools shall be spring-actuated in the open direction to permit one-handed operation.

d. Driver-Type Tools - Driver-type hand tools shall not require a push force to maintain tool engagement while providing torque.

11.2.3.2 Tool Commonalty Design Requirements

{A}

To ensure that the tool complement is kept at a minimum, the following requirements shall apply:

a. Tool Quantity - The number of different types of tools shall be minimized.

b. Standard Attaching Hardware and Fasteners - Size and type of attaching hardware and fastener head configurations shall be standardized throughout the vehicles to limit the number and kind of tools required to perform maintenance tasks.

(Refer to Paragraph 11.9, Fastener Design Requirements, for specific fastener-to-tool interface requirements.)

c. Special Tools - The number of different and special tools required for maintenance shall be minimized.

d. For every type and size of fastener used onboard, a corresponding tool(s) shall be available for removal/replacement.

(Refer to Paragraph 11.9.3.1 l., Fastener Design Requirements for specific considerations and requirements).

11.2.3.3 Tool Tethering/Retention Design Requirements

{A}

The following tool tethering and tool retention requirements shall be apply:

a. Tool Restraints - A means shall be provided on all tools for restraining the tool during use.

b. Tool Transporter Devices - Tool carriers shall be provided to transport tools and to retain these tools during the maintenance activity.

c. Retention of Small Parts - Tool carriers/transfer devices shall provide a means of retaining small parts and attaching hardware. Items retainable in this manner shall be visible for retrieval.

d. Tool Restraint During Translation - Tools shall be restrained in the tool carrier/transfer device with sufficient force to prohibit detachment during translation.

e. Tool Carrier Attachment - Tool carriers and tool retention devices shall have provisions to attach the device to the crewmember or to adjacent structure or equipment.

(See Paragraph 11.7.3.3, Equipment Restraint Design Requirements, for other applicable restraint requirements.)

f. Inadvertent Tool Disassembly - A means shall be provided to prevent inadvertent tool disassembly while installing, using, removing, or transporting the tool.

11.2.3.4 Tool Stowage Design Requirements

{A}

Tool stowage must allow for ease of retrieval, retention, identification, and replacement. To accomplish this, the following requirements shall apply:

a. General - A systematic approach shall be used in stowing tools and maintenance aids throughout the space module.

b. Stowage Provisions - Provisions for launch, entry, and temporary inflight stowage shall be provided.

c. Stowage Location:

1. Specialized tools shall be stowed in areas which correspond to their functional applications.

2. All general-purpose tools shall be grouped in one specific area.

d. Tool Stowage List - A tool summary or listing of the entire tool inventory, including stowage locations, shall be available onboard the space module.

e. Tool Arrangement in Stowage Container - A systematic approach shall be used in the arrangement of tools in the tool kit.

f. Temporary Stowage at Work Area - A systematic approach and a methodical layout of tools at the work area shall be required.

(Refer to Paragraph 10.12.3, Stowage Design Requirements, for other specific stowage requirements.)

11.2.3.5 Tool Labeling and Identification Design Requirements

{A}

Tool and tool stowage labeling and identification requirements shall comply with the following:

(Refer to Paragraph 9.5.3, Labeling and Coding Design Requirements for detailed labeling and coding requirements.)

a. Selection of Names for General Tools - Tool names shall be identical to those names called out on the tool/ tool label and, in all cases, will be the most common definitive name recognizable by the crewmembers.

b. Selection of Names for Specialized Tools - Specialized tool nomenclature shall describe the specific task it is intended to accomplish and shall not be identified with the equipment it is servicing.

c. Identification of Specialized Tools - When special tools are absolutely necessary, they shall be coded and/or marked to indicate intended use.

d. Tool Labels - Prominent labels shall be provided adjacent to each tool in the stowage container/kit if the tool is not readily recognizable.

e. Tool Metric/English Identification - All tools shall be labeled or coded to indicate whether the tool is sized in metric or English units.

f. Tool Inventory Control Labeling - Tools shall be tracked by an automated inventory control identification system.

(Refer to Paragraph 13.3.3, Inventory Control Design Requirements, for specific requirements.)

g. EVA Tool Compatibility - IVA tools that are EVA compatible shall be so identified.

11.2.3.6 Tool Access Design Requirements

{A}

The following tool access volume and operational constraints requirements are applicable to both IVA and EVA hardware design (refer to Figure 11.2.3.6-1 for IVA requirements and Paragraph 14.6.2.3 for EVA requirements):

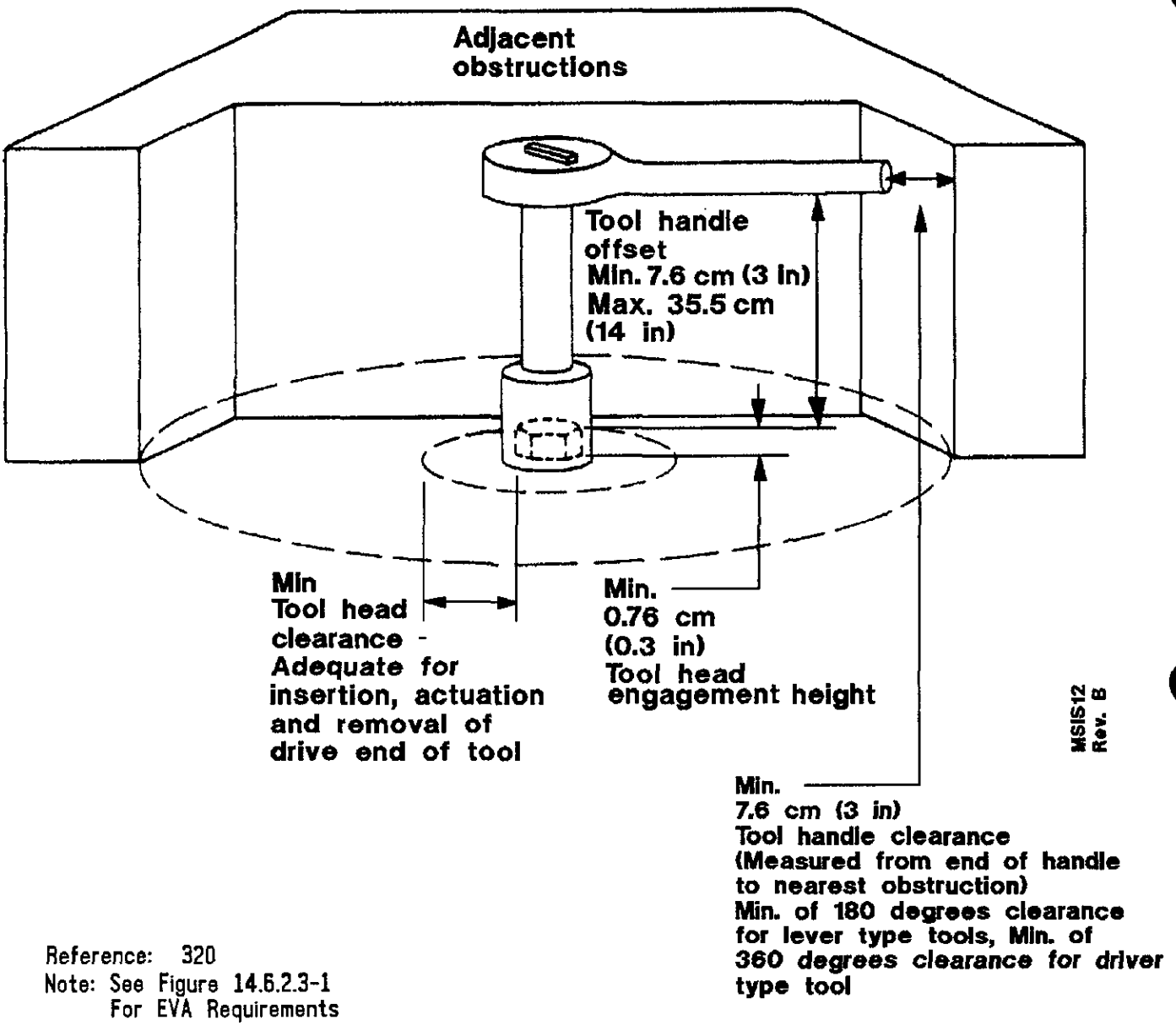

Reference: 320
Note: See Figure 14.6.2.3-1
For EVA Requirements

Figure 11.2.3.6-1 Tool Access Requirements (IVA)

a. Tool Head Clearance - Where only tool access is required, clearance shall be provided around the fastener or drive stud for insertion, actuation, and removal of the drive end of the tool.

b. Tool Handle Clearance - A minimum of 7.6 cm (3 in.) shall be provided for clearance between a tool handle engaged on a fastener or drive stud and the nearest piece of hardware. The tool handle should be able to maintain this clearance through a full 180 deg. swept envelope.

c. Tool Head-to-Fastener Engagement Height - The tool socket/fastener head engagement height shall be sufficient to lower the bearing loads on the fasteners and tool below the failure limits of the materials.

d. Tool Handle Offset - The maximum tool offset between the tool handle and the tool head shall be 35.5 cm (14 in.).

e. Access for Tools - Minimum tool access clearance for hand tool actuation is given in Figure 11.2.3.6-2.

11.2.3.7 Special Tool Features Design Requirements

{A}

Compliance with the following special features shall be required when designing or providing tools for IVA servicing and maintenance tasks:

a. Nonsparking Tools - Nonsparking materials shall be required for general purpose tools.

b. Nonconductive Tools :

(Refer to Paragraph 6.5.2, Touch Temperature Design Requirements, when tools are to be used in extremely hot or cold temperature areas.)

(Refer to Paragraph 6.4.3, Electrical Hazards Design Requirements, for requirements for insulation protection against electrical hazards.)

c. Finish - Tools shall be capable of being refinished in flight in order to remove burrs.

(Refer to Paragraph 6.3.3, Mechanical Hazards Design Requirements, for burrs, corners, edges, and protrusion design requirements.)

d. Battery Pack :

1. Power tools shall be designed so the battery packs can be replaced at the worksite.

2. Power tools using battery packs shall have a level-of-charge indicator or an indication as to when a battery pack is required to be replaced or recharged.

3. Hazards associated with charging and stowage of rechargeable batteries (such as toxic or flammable offgassing, leakage of corrosive electrolytes or high temperatures) shall be addressed and controlled.

11.2.4 Example Tool Design Solutions

{A}

Examples of previously used IVA tools are included in this section to illustrate how tools are constructed, stored, identified, transferred, tethered, or restrained at work locations. These proven examples should be considered when developing new tools and maintenance aids for future missions.

(Refer to Paragraph 14.6.2.4, Example EVA Tools Design Solutions, for description of EVA tools.)

11.2.4.1 Example Manual Tools

{A}

The following IVA tools have flown successfully on STS missions:

(Refer to Reference 150 for complete details on STS tools.)

Opening dimensions		Task
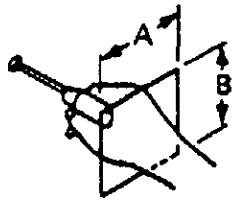	A 117 mm (4.6 in) B 107 mm (4.2 in)	Using common screw-driver with freedom to turn hand through 180°
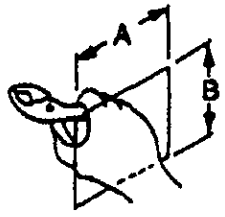	A 133 mm (5.2 in) B 115 mm (4.5 in)	Using pliers and similar tools
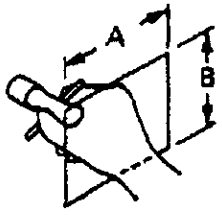	A 155 mm (6.1 in) B 135 mm (5.3 in)	Using T-handle wrench with freedom to turn wrench through 180°
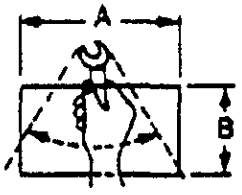	A 203 mm (8.0 in) B 135 mm (5.3 in)	Using open-end wrench with freedom to turn wrench through 62°
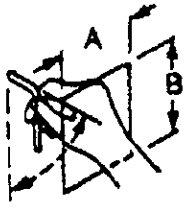	A 122 mm (4.8 in) B 155 mm (6.1 in)	Using Allen-type wrench with freedom to turn wrench through 62°

MSIS-27 REV A

Reference: 1, Table 4.4-7

Note:
1. Also refer to Figure 12.3.1.2-1 for other hand and arm access hole dimensions
2. Also refer to Figure 11.2.3.6-1

Figure 11.2.3.6-2. Minimal Clearance for Tool-Operated Fasteners

a. Off-the-Shelf STS IVA Tools - Examples of off-the- shelf IVA tools, stowage, and identification methods are shown in Figure 11.2.4.1-1, -2 and -3.

b. Stowage Provisions - Stowage provisions are shown in Figures 11.2.4.1-1, -2, and -3. Tool trays include provisions for individual hand tools in the trays by providing cushions fabricated from white foam with a fine cell structure. Very accurate cuts were required to provide adequate retention for launch, inflight, and enter environments. Tools were individually identified at each location. The foam is coated with a fire-retardant seal material.

c. Tool Kits and Tool Pouches - Tool kits and tool pouches (Figure 11.2.4.1-3) were used to retain small tool packages to worksites. These kits or pouches had provisions (snaps, straps, Velcro, etc.) for attaching the units to the worksite structure.

11.2.4.2 Example Power Tools
{A}

The vacuum cleaner is an example of an IVA power tool used on Skylab, Shuttle and Spacelab missions. The vacuum cleaner is a tool which is presently used for cleaning intake screens to black box cooling fans, orbiter air filters, and spacelab Environmental Control System (ECS) filters. The unit is also used for general housekeeping chores.

(Refer to Paragraph 13.2 Housekeeping, for housekeeping design considerations and requirements.)

Another example of IVA power tools is the "EVA Power Tool" utilized to remove panel fasteners in an IVA mode.

(Refer to Paragraph 14.6.2.4.2, Example EVA Power Tool Design Solutions, for a description of this STS EVA power tool.)

11.3 DRAWERS AND RACKS
{A}

11.3.1 Introduction
{A}

This section provides the design considerations and requirements for **drawers** and **racks**. This includes the definition of size, interfaces, operating mechanisms, location relative to workstations and traffic patterns, ease of use, restraints, and utility connections.

Stowage drawers are a specific type of stowage compartment.

(Refer to Paragraph 10.12, Stowage Facility for general and specific stowage design considerations and requirements that are also applicable to drawers.)

Equipment drawers are a specific type of equipment mounting hardware that are designed to facilitate equipment replacement and maintenance.

(Refer to Paragraph 12.0, Design for Maintainability, for general and specific maintainability design considerations and requirements that are also applicable to equipment drawers.)

11.3.2 Drawer and Rack Design Considerations
{A}

There are two types of drawers that are used in space modules: storage drawers and equipment drawers. Stowage drawers and equipment drawers are similar in that both are mounted in racks, cabinets, or housings; they are designed to slide out to provide the user with access to their contents; they stay in the open position until pushed back into the stowed position; and they can be removed from the housing/cabinet by some secondary unlatching operation. They are distinguished from each other by the fact that stowage drawers are used to stow normally removable contents, whereas equipment drawers are

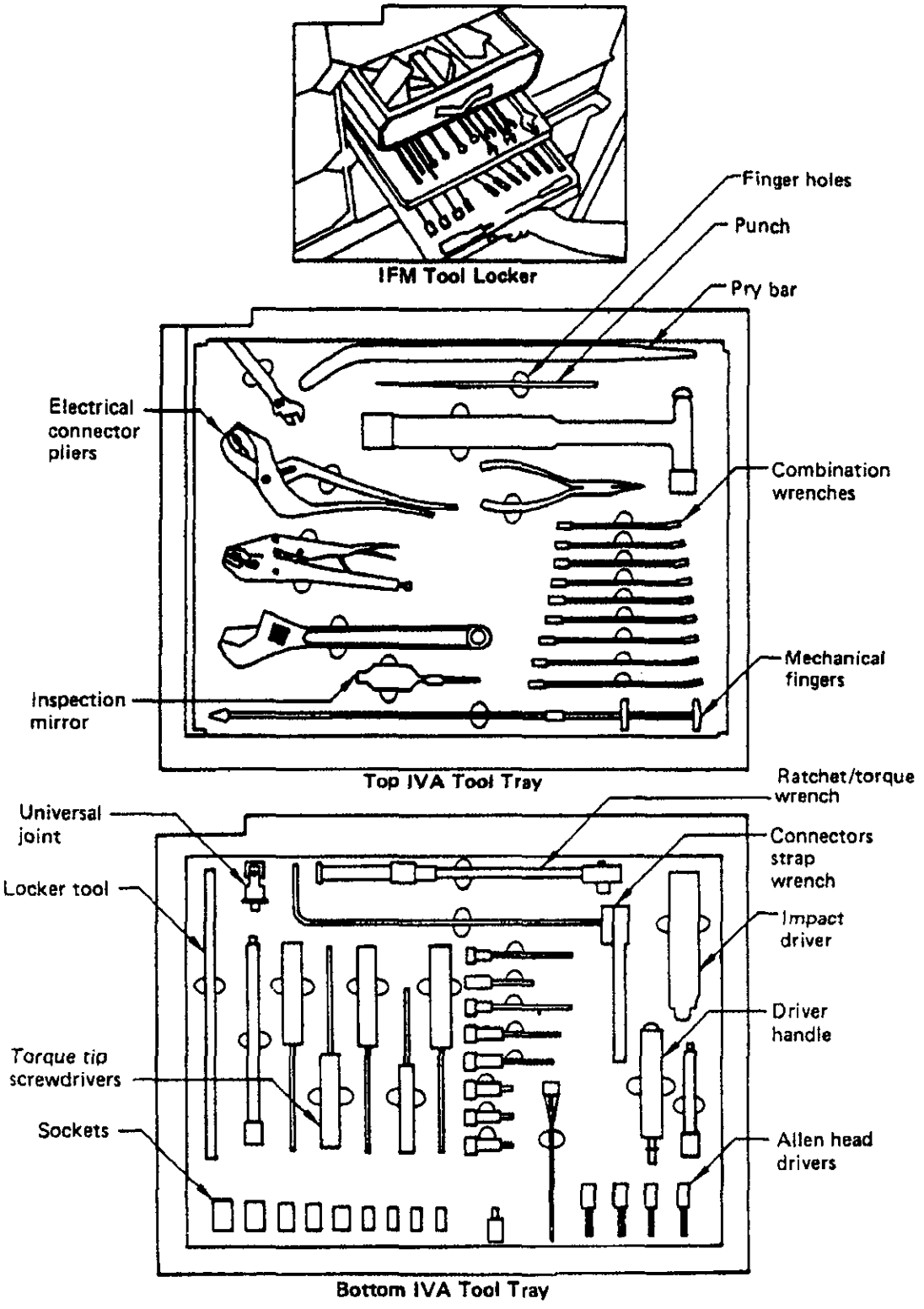

Reference: 150, page 3.23-10

Figure 11.2.4.1-1. Examples of IVA Hand Tools, Stowage, and Identification

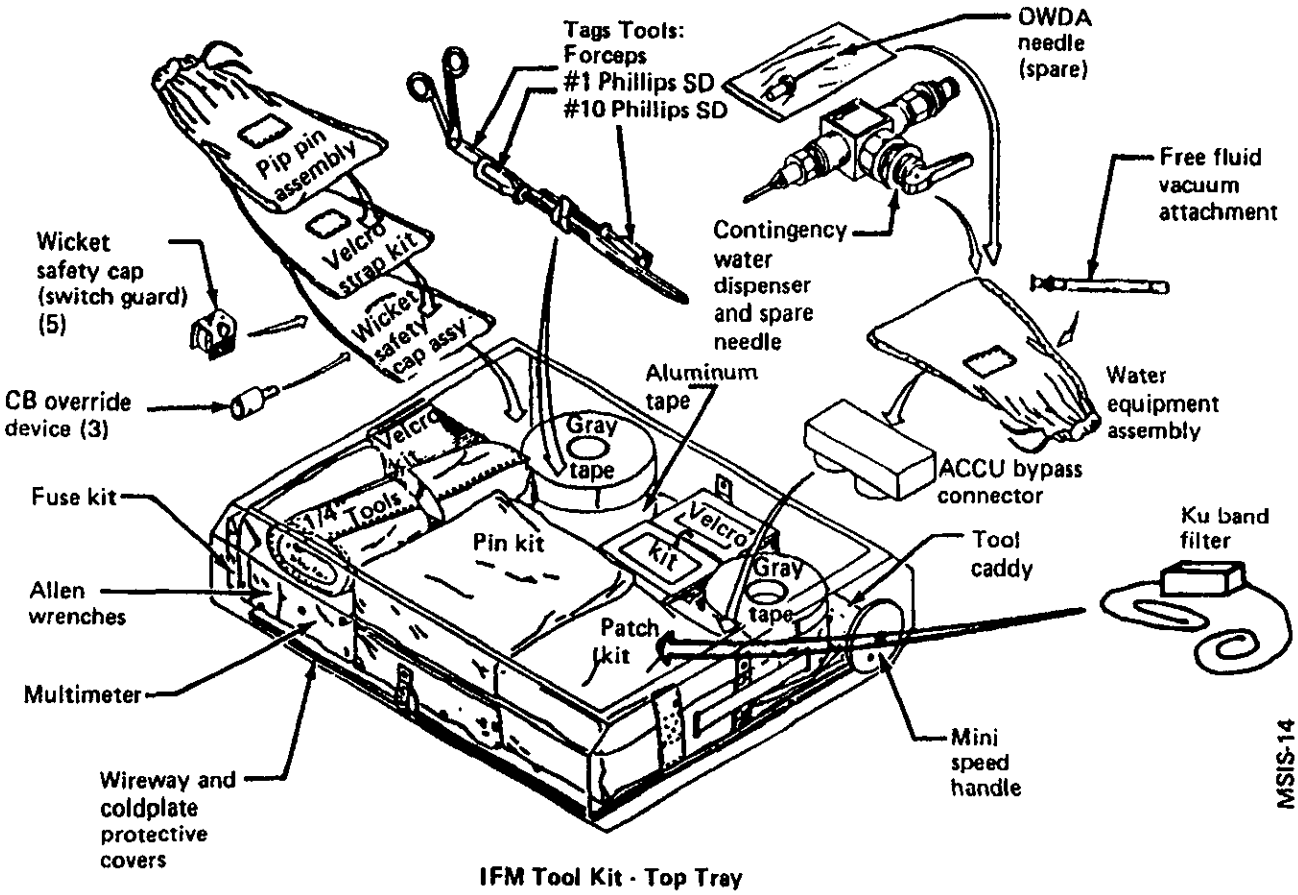

IFM Tool Kit - Top Tray

Reference: 150, Figure 3.23-14

Figure 11.2.4.1-2. Miscellaneous IVA Tool Stowage Examples

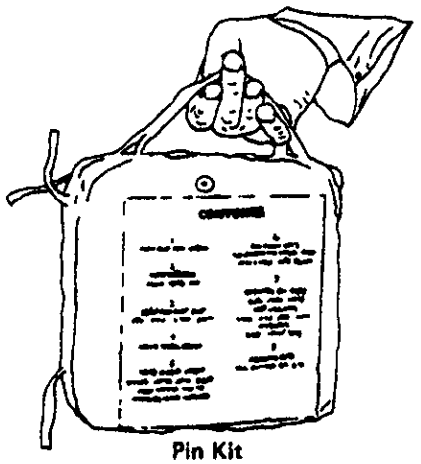

Pin Kit

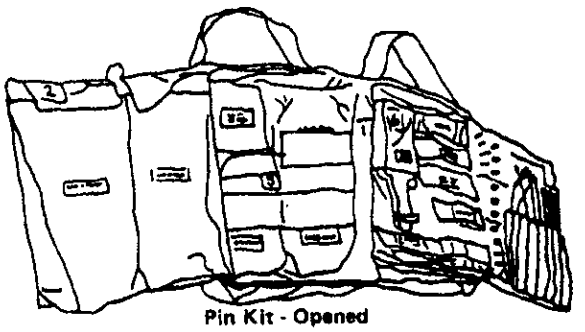

Pin Kit - Opened

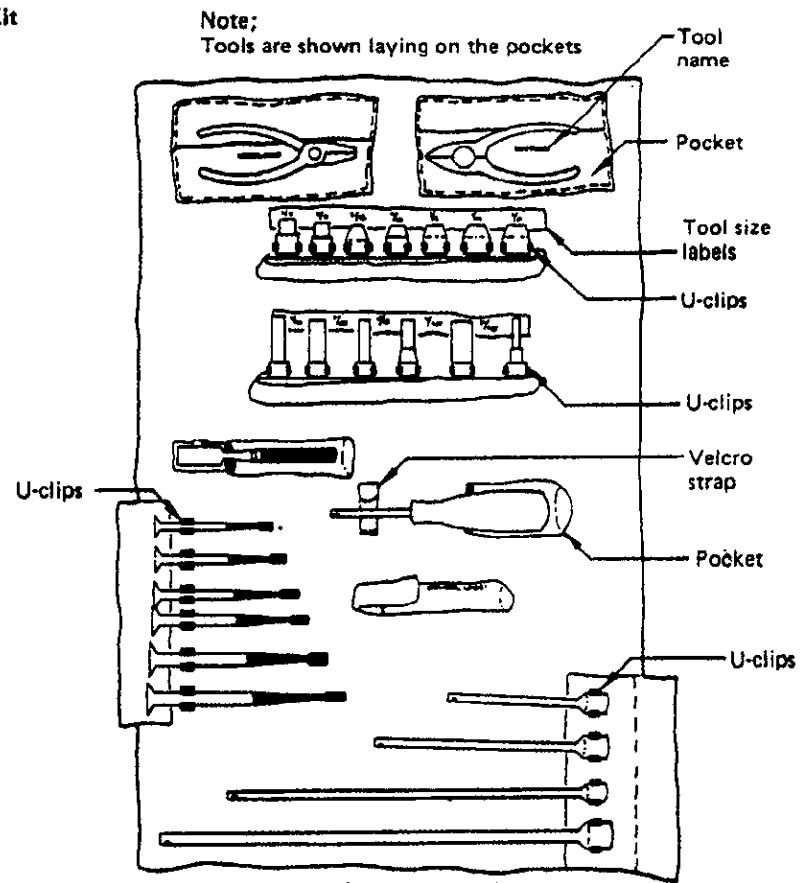

Tool Pouch - Opened

MSIS-15

Reference: 150, Figure 3.23-16 and -18

Figure 11.2.4.1-3. Tool Translation and Retention Pouch Examples

used to mount subsystem components. The contents of a stowage drawer can be removed or replaced easily as the contents are restrained by "soft" restraints (e.g., foam cutouts, elastic bungee cords, etc.) which can be easily manipulated by hand without using any tools. The contents of an equipment drawer, on the other hand, usually need to be removed or replaced using a hand tool. Equipment drawers always have utility connections(such as power and thermal control), whereas stowage drawers generally have none.

Because of their similarities, stowage and equipment drawers need to be designed with many of the same design considerations and requirements.

The drawer becomes a workstation when the crewmember has a need to access its contents. This requires adequate crewmember restraint while using it, handles and latches that are designed for one-handed operation, ease of access to the contents, restraint of the drawer/rack in the opened position, Commonalty with other drawers/racks, etc.

Racks are structural housings into which equipment drawers and other types of equipment mounting hardware are installed. The racks are either single-wide units (i.e., they are designed to mount a single stack of equipment drawers) or they are double-wide units (i.e., they are designed to mount a side-by-side stack of equipment drawers so they can house a double-wide equipment drawer). The racks generally have built-in utility (e.g., thermal, power, data) distribution systems which are designed to provide interfaces with each of the installed equipment drawers. The rack's utility system interfaces with the space module's utilities distribution system at standardized locations.

In the closed position, drawers should be designed to contain particulates, liquids, or gaseous matter. Drawer opening and closing mechanisms should incorporate some form of motion damping to prevent disturbance of the micro-g environment and to hold the drawer at intermediate positions for zero-g operations. The use of magnetic latches on drawers and doors should be avoided if at all possible.

11.3.3 Drawer and Rack Design Requirements

{A}

11.3.3.1 Drawer and Rack Interfacing Requirements

{A}

Stowage drawers, equipment drawers and racks shall be designed to provide the following interfacing features:

a. Size :

1. Unless prohibited by functional needs, all racks shall be designed to house single-wide drawers (and other types of equipment mounting hardware) that shall be 48.26 cm (19.00 in) wide or double-wide drawers that shall be 96.52 cm (38.00 in) wide.

(Refer to Paragraph 2.3.2, Standardization Design Requirements, for the general standardization requirements.)

2. If equipment is intended to be launched and returned in the Shuttle stowage lockers, it shall be sized per Figure 11.3.3.1-1.

b. Location Related to Traffic Patterns - Racks that require frequent drawer deployment shall be located in areas that do not have high traffic.

(Refer to Paragraph 8.7.3, Traffic Flow Design Requirements, for general and specific requirements related to blocking traffic patterns.)

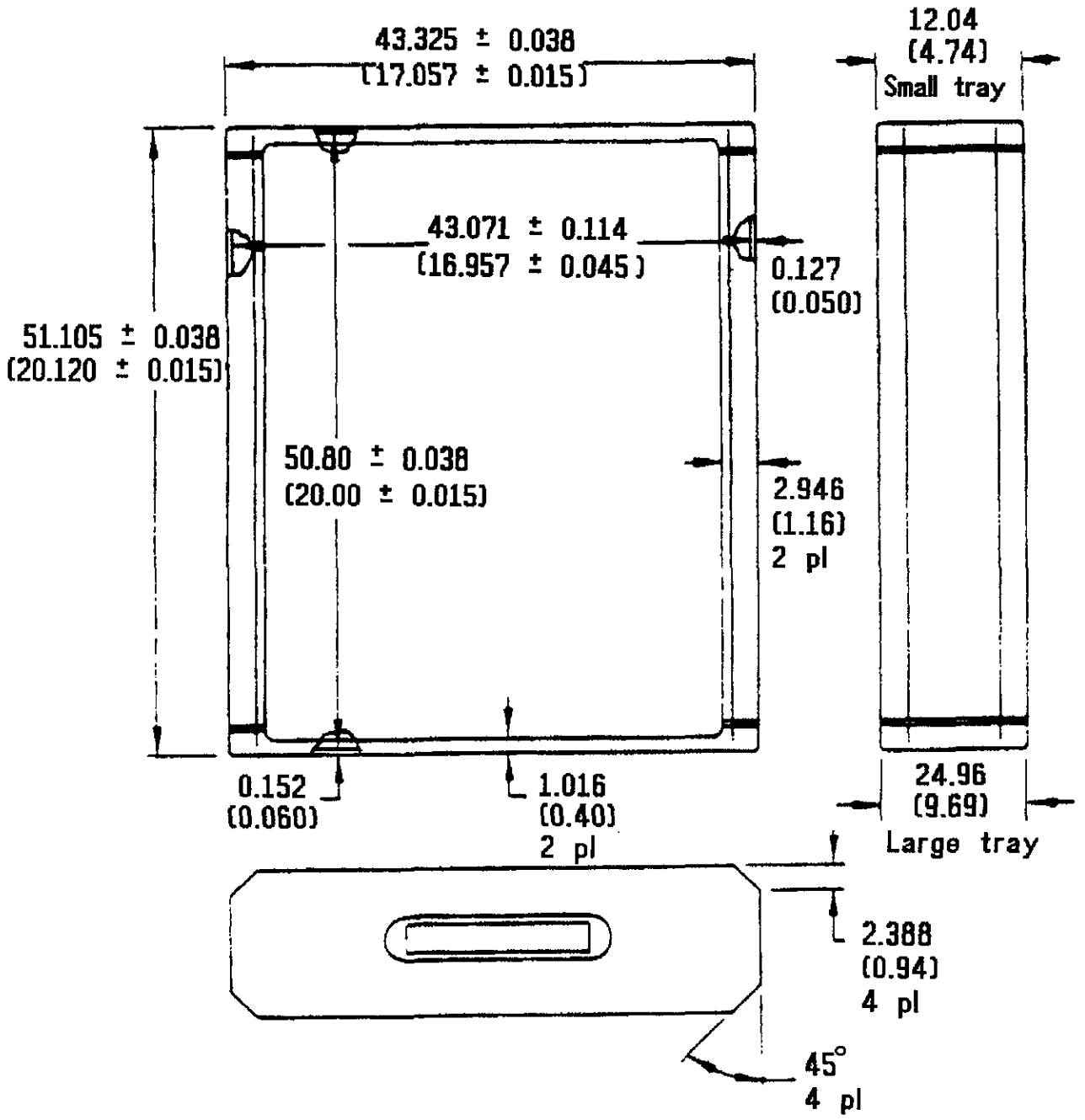

Reference: 350, Figure 4 and 5

Tolerances: 0.0002 (0.0001) Small tray
0.0005 (0.0002) Large tray

Dimensions are cm (in)

MSIS 229

Figure 11.3.3.1-1 Shuttle Stowage Locker Dimensions

c. Unobstructed Volume for Use - Provide adequate clearance such that the drawers can be opened, removed, and replaced without obstructions from adjacent hardware.

d. Easily Removable - Rack and drawer interfaces shall be designed such that the drawers can be removed from their rack or cabinet along a continuous straight or slightly curved path without using tools.

e. Limit Stops :

1. Provide limit stops that will prevent the drawer from being unintentionally pulled out of the rack.

2. The limit stops shall be designed to hold the drawer in the full open position.

3. The limit stops shall be capable of being disengaged without using a tool to enable drawer removal.

f. Drawer Movement Forces - Drawer opening/closing or removal/installation shall not require a force greater than 156 N (35 lbs).

(Refer to Paragraph 4.9.3, Strength - Design Requirements, for crewmember strength requirements.)

g. Alignment Guides - Provide guide pins or equivalent to aid in alignment when replacing a drawer into its rack or cabinet.

(Refer to Paragraph 11.5.3.2, Alignment Devices Design Requirements, for detailed requirements.)

h. Shuttle Compatibility - If equipment is intended to be launched/returned within the Shuttle, it shall be designed for compatibility with the Shuttle stowage system.

i. Stowage Trays

1. Provide limit stops that will prevent the tray form being unintentionally pulled out of the drawer.

2. The limit stops shall be designed to hold the tray in the 3/4 open position.

3. The limit stops shall be capable of being disengaged without using a tool.

11.3.3.2 Design Requirements Common to Both Stowage and Equipment Drawers

{A}

In addition to the requirements given in Paragraph 11.3.3.1, all stowage and equipment drawers shall be designed to provide the following features:

a. Latches/Handles/Operating Mechanisms - All latches, handles, and operating mechanisms shall be designed to be easily latched/unlatched and opened/closed with one hand by the entire crewmember population without having to use any operating instructions.

(Refer to Paragraph 3.3, Anthropometrics and Biomechanics-Related Design Data, for crewmember population anthropometrics.)

(Refer to Paragraph 4.9.3, Strength Design Requirements, for crewmember strength capabilities.)

(Refer to Paragraph 11.6.3, Handle and Grasp Area Design Requirements, for handle and grasp area configuration requirements.)

b. Latch/Unlatch Status - The design shall be such that it is obvious when the drawer is not fastened/locked when in the closed position.

11.3.3.3 Stowage Drawer Design Requirements

{A}

In addition to the requirements given in Paragraphs 11.3.3.1 and 11.3.3.2, stowage drawers shall be designed to meet the following requirements:

a. Restraint of Contents :

1. Drawer contents shall be restrained in such a way that the items shall not float free when the drawer is opened, or jam the drawer so it cannot be opened or closed.

2. Drawer contents shall be restrained in such a way that the contents can be removed/replaced without using a tool.

(Refer to Paragraph 11.7.3, Equipment Restraints, for specific restraint requirements.)

b. Arrangement in Housing/Cabinet - Drawers shall be arranged within their housing/cabinet such that the most frequently accessed drawers are in the most accessible locations.

c. Access to Contents - The contents of drawers shall be arranged such that the contents are visible and accessible when the drawer is in the open position.

d. Identification of Contents - In the stowed position, the contents of drawers shall be identified by labeling.

(Refer to Paragraph 9.5.3, Labeling and Coding Design Requirements, for specific requirements.

11.3.3.4 Equipment Drawer Design Requirements

{A}

In addition to the requirements given in Paragraphs 11.3.3.1 and 11.3.3.2, equipment drawers shall be designed to meet the following requirements:

a. Utility Connections :

1. The utility connections shall be designed to be easily disconnected/connected when the drawer is in the fully opened position.

(Refer to Paragraph 11.10.3, Connector Design Requirements, for general and specific connector design requirements.)

2. If the utility connection is via a flexible umbilical, sufficient cable length shall be provided such that the drawer can be fully opened without disconnecting the cables.

(Refer to Paragraph 11.14.3, Cable Management Design Requirements, for general and specific design requirements.)

b. Equipment Layout on Rack :

1. Components shall be mounted in an orderly array on a two-dimensional surface, rather than stacked one on another (i.e., a lower layer shall not support an upper layer).

2. Items of the same or similar form, but having different functional properties, shall be mounted with a standard orientation throughout the unit, but shall be readily identifiable and distinguishable, and shall not be physically interchangeable.

3. Delicate items shall be located or guarded so that they will not be susceptible to damage while the unit is being handled or maintained.

11.4 CLOSURES AND COVERS

{A}

11.4.1 Introduction

{A}

Closures and covers design considerations, requirements, and example design solutions are provided in this section.

(Closures should not be confused with the subject of hatches and doors which are covered in Paragraph 8.10)

11.4.2 Closures and Covers Design Considerations

{A}

Closures and covers are necessary to prevent loose items, such as small tools, fasteners, and refuse from drifting into undesirable areas because 1) some small items/components cannot be easily retrieved for use if they migrate into inaccessible locations, 2) the items/components may drift into areas where they could cause damage to mechanical or electrical components with which they might come in contact, and 3) these floating items may become lost inside an equipment housing.

Some equipment closures and covers require ventilation holes. These ventilation holes should be small enough that crewmembers cannot inadvertently insert an object which might touch high voltage or moving parts. Ventilation holes, grids, screens, or mesh are susceptible to becoming collection surfaces for the accumulation of particulate and fibrous debris (e.g., dead skin flakes, fabric lint, packaging scraps, etc.).

(Refer to Paragraph 13.2.3 Housekeeping Design Requirements, for particulate matter control requirements.)

11.4.3 Closures and Covers Design Requirements

{A}

Equipment housings (e.g., electrical bays, cabinets, lockers, and consoles) shall be designed to provide closures and covers for inaccessible areas. The following requirements shall apply:

a. Sealing - The inaccessible areas shall be sealed to prevent small items from drifting into them.

b. Removal - Closures shall be quickly and easily removed to allow maintenance of equipment.

c. Securing - It shall be obvious when a closure is not secured, even though it may be in place.

d. Loads - Nonstructural closures should be capable of maintaining closure and of sustaining a crew-imposed minimum design load of 556 N (125 lbf) and a minimum ultimate load of 778 N (175 lbf).

e. Instructions - If the method of opening a cover is not obvious from the construction of the cover itself, instructions (including applicable tool instructions) shall be permanently displayed on the outside of the cover.

f. Clearance - Bulkheads, brackets, and other units shall not interfere with removal or opening of covers.

g. Application - An access cover shall be provided whenever frequent maintenance operations would otherwise require removing the entire case or cover, or dismantling an item of equipment.

h. Self-Supporting Covers - All access covers that are not completely removable shall be self-supporting in the open position.

(Refer to Paragraph 12, Design for Maintainability, for other maintainability design considerations and requirements.)

i. Ventilation Screen Access - Where ventilation screens, holes, or grids are used, the ventilation surface shall be accessible for vacuuming in its installed position.

(Refer to Paragraph 13.2.3.3 Vacuum Cleaning Design Requirements, for more detailed requirements.)

11.4.4 Example Closures and Covers Design Solutions

{A}

Special hardware items, such as metal or rubber trim strips, moldings, fairings, or cover plates, can be used to seal off the inaccessible areas and meet the closure requirements. An example is shown in Figure 11.4.4-1.

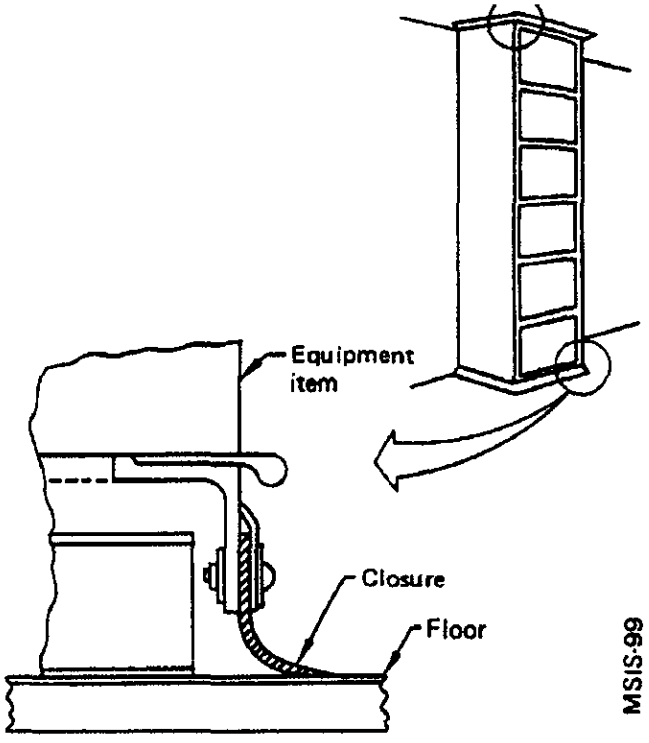

Reference: 1, Figure B-23, page B-13

Figure 11.4.4-1. Example of Use of Closures

11.5 MOUNTING HARDWARE

{A}

11.5.1 Introduction

{A}

This section includes design considerations and requirements for installation and mounting of hardware and equipment. This section covers items such as access, visibility, spacing between components, alignment aids, shims, and washers.

11.5.2 Mounting Hardware Design Considerations

{A}

For manned space modules that will require inflight checkout, maintenance, and replacement of hardware, it is very important that the hardware components be mounted in such a way that the crew can perform these operations with minimal inconvenience. This requires attention to hardware design details such as accessibility, clearance between components, forces to disengage the items, alignment, and shimming.

11.5.3 Mounting Hardware Design Requirements

{A}

11.5.3.1 General Mounting Design Requirements

{A}

The following general requirements apply to mounting hardware:

a. Equipment Mounting - Equipment items shall be designed so that they cannot be mounted improperly.

b. Drawers and Hinged Panels - Subsystem components which are frequently pulled out of their installed position for checkout shall be mounted on equipment drawers or on hinged panels.

(Refer to Paragraph 11.3.3, Drawer and Rack Design Requirements, for specific requirements.)

c. Layout - Components shall be mounted so that a minimum amount of place-to-place hand movements will be required during operations.

d. Covers or Panels - Removal of any replaceable item shall require opening or removing a minimum number of covers or panels.

(Refer to Paragraph 11.4.3, Closures and Covers Design Requirements, for specific requirements.)

e. Installation/Removal Force - Hardware mounted into a capture-type receptacle that requires a push-pull action shall require a force less than 156N (35 lbf) to install or remove.

(Refer to Paragraph 4.9.3, Strength Design Requirements.)

f. Rear Access - Equipment to which rear access is required shall be free to open or rotate to their full distance travel and remain in the "open" position without being supported by hand.

g. Tools - Whenever possible, items shall be replaceable with a common hand tool.

(Refer to Paragraph 11.2.3, Tool Design Requirements, for specific tool requirements.)

h. Direction of Removal - Replaceable items shall be removable along a straight or slightly curved line, rather than through an angle.

i. Visibility - Visual access for alignment and attachment of equipment shall be provided.

(Refer to Paragraph 11.5.3.2, Alignment Devices Design Requirements, for specific alignment requirements.)

j. Spacing - Mounting bolts and fasteners shall be spaced far enough from other surfaces to allow personnel to manipulate them.

(Refer to Paragraph 11.2.3.6, Tool Access Design Requirements, and Paragraph 11.9.3, Fastener Design Requirements, for specific requirements.)

k. Number of Mounting Bolts - Use the minimum number of fasteners, consistent with stress and vibration requirements, so that the crewmember's workload is minimized.

(Refer to Paragraph 11.9.3.1, General Fastener Design Requirements, for other fastener requirements.)

l. Shims, Washers - Where shims or washers are permitted in an IVA application, the following rules shall be followed:

1. Shims shall be bound together in a shim assembly.

2. Shim assemblies shall be tethered or restrained at the location or point of use and identified as to location or point of use.

3. A similar requirement shall be observed for washers and other loose items which are auxiliary connector/fastener devices.

11.5.3.2 Alignment Devices Design Requirements

{A}

The following alignment methods for replaceable hardware shall be used:

a. Alignment Marks - If proper interface orientation is not obvious by virtue of external geometry or if adequate visibility cannot be provided for hardware that will be mounted on-orbit, the hardware design shall incorporate alignment marks and/or orientation arrows.

1. Alignment marks shall be applied to both mating parts and the marks shall align when the parts are in the operational position.

2. An alignment mark shall consist of a straight line of a width and length appropriate to the size of the item.

Alignment marks shall be clearly visible to a crewmember performing hardware removal/replacement.

(Also see Paragraph 9.5.3.1.5, Alignment Marks/ Interface Identification Design Requirements.)

b. Alignment Devices - Guide pins or their equivalent shall be provided to assist in alignment of hardware during mounting, particularly on modules that have integrated connectors.

(Refer to Paragraphs 11.10.3.3, Structural Connectors Design Requirements, and 11.10.3.4, Optical Connectors Design Requirements, for connector alignment requirements.)

c. Keying - All replaceable hardware shall be designed so that it will be physically impossible to install it in the wrong orientation or location.

d. Replaceable Hardware Identification - Replaceable hardware shall be identified with nomenclature that aids the crewmember in identifying the hardware name, alignment of the hardware, and the correct use of attaching parts.

(Refer to Paragraph 9.5.3, Labeling and Coding Design Requirements, for specific requirements.)

11.5.4 Example Mounting Hardware Design Solutions

{A}

Examples of successful mounting hardware designs from previous space missions are included in this section.

a. Alignment Marks - Figure 11.5.4-1 shows an example of how to use alignment marks. The alignment mark size on the equipment and the mating structure shall align when the parts are in the operational position.

b. Identification of Movable Equipment - Moving equipment from the launch location to the orbital or planetary operational location will require providing information to the crewmember which shows the correct use of the attaching parts. Figure 11.5.4-2 shows an example of attachment interface markings on movable equipment.

11.6 HANDLES AND GRASP AREAS (FOR PORTABLE ITEMS)

{A}

11.6.1 Introduction

{A}

This section includes design criteria for handles and grasp areas. The requirements for these items are similar in that they both pertain to use with removable or portable units. However, these requirements should not be confused with handholds and handrails.

(Most of the design criteria for handholds and handrails is provided in Paragraph 11.8, Mobility Aids. Paragraph 11.8 also contains criteria on equipment mobility aids other than handles and grasp areas.)

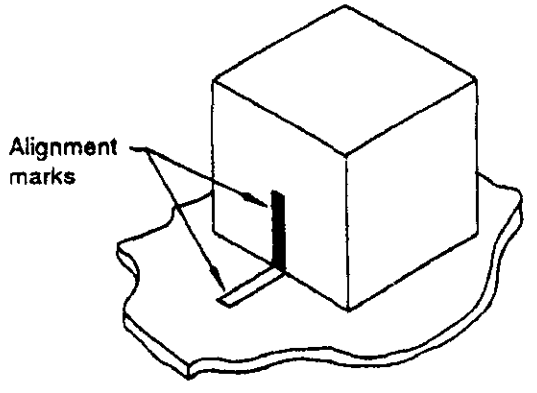

Reference: 1, Paragraph 4.8.4.1, page 4.8-6

MSIS-17

Figure 11.5.4-1. Example of Mounting Hardware Alignment Marks

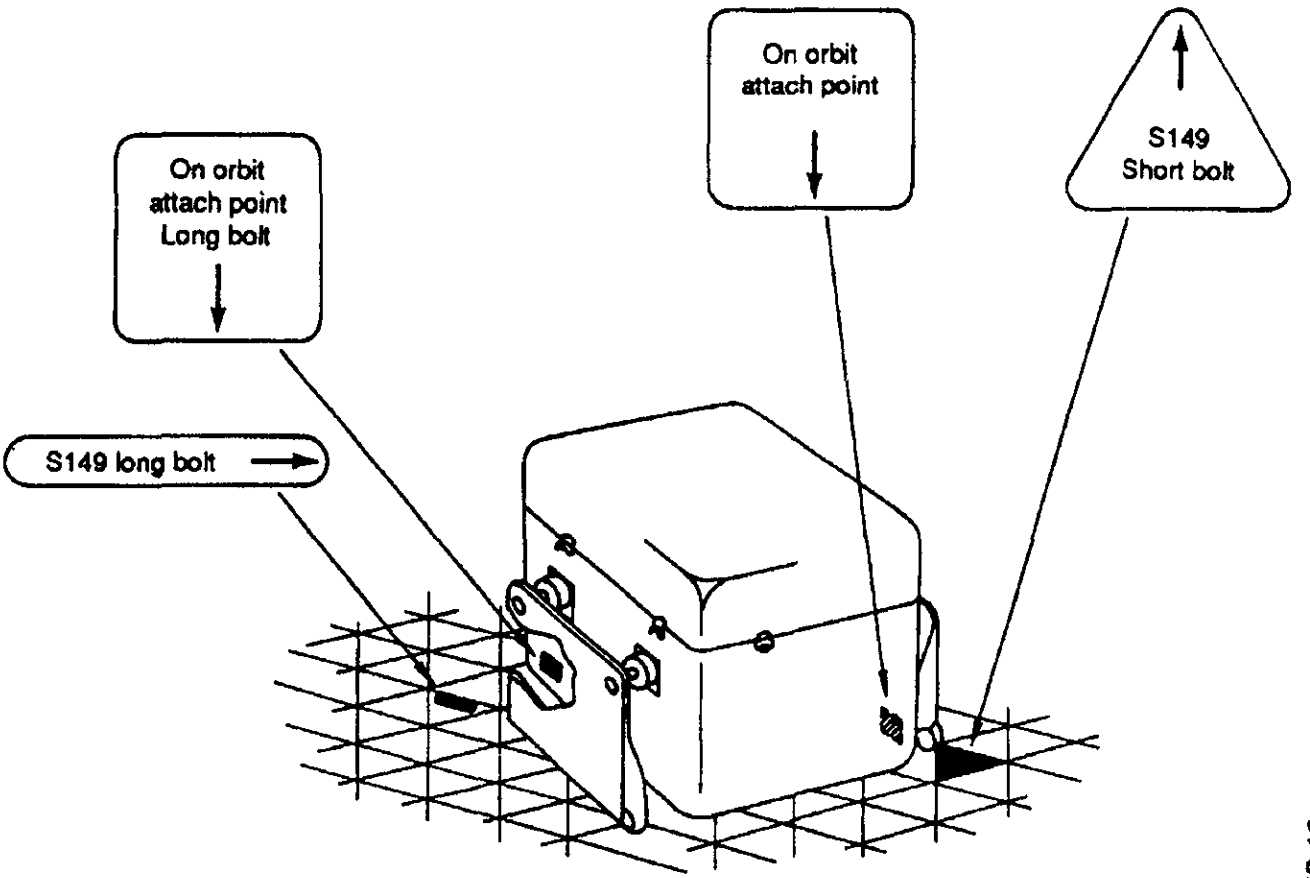

Reference: 1, Figure B-28, page B-15

MSIS-16

Figure 11.5.4-2. Example of Attachment Interface Markings on Movable Equipment

(Refer to Paragraph 11.3.3, Drawer and Rack Design Requirements, for requirements pertaining to handles and mechanisms for drawers and racks.)

11.6.2 Handle and Grasp Area Design Considerations

{A}

Handle or grasp area designs should consider the following factors:

a. The mass properties of the item to be moved.

b. The operational location of the item relative to other items.

c. The manner in which the item is to be handled.

d. The distance the item needs to be moved.

e. The frequency with which the item may need to be handled.

f. The additional uses which the handle may serve, such as the anchor for a tether or as a handhold.

g. Handles should be located on either side of the center of mass.

h. The number and location of handles shall be determined by the mass, size, and shape of the object. (Refer to Paragraph 8.8.2).

i. Handles should be recessed or fold flush with surfaces to minimize potential for snagging clothing, equipment, or restraints.

11.6.3 Handle and Grasp Area Design Requirements

{A}

11.6.3.1 General Handle and Grasp Area Design Requirements

{A}

The following general requirements shall be observed:

a. Provide Handles - All removable or portable units shall be provided with handles or other suitable means for grasping, tethering, handling, and carrying.

b. Exempt Items - Items less than 0.03 m^3 (1 ft^3) whose form factor (shape) permits them to be handled easily shall be exempt from the above requirement.

c. Labeling of Nonhandling Areas - Built-in features that appear to be suitable for grasping/tethering/ restraining and are not suitable must be labeled to indicate that these features are not suitable for these purposes.

(Refer to Paragraph 9.5.3, Labeling and Coding Design Requirements, for specific requirements.)

11.6.3.2 Handle and Grasp Area Location Design Requirements

{A}

The following general location requirements of handles or grasp areas shall apply:

a. Interference - Handles and grasp areas shall be located so that they do not interfere with equipment location or maintenance.

b. Clearance - Clearances shall be provided between handles and obstructions consistent with anthropometric requirements.

c. Tether Attachments - Handles and grasp areas shall be suitable as tether or bracket attachment positions.

d. Location - The location of handles or grasp areas shall be such that they do not constitute passageway hindrances or safety hazards. If they must be located in passageways they shall be recessed and designed to minimize chance of crewmember injury or inadvertent contact.

e. Location/Front Access - Handles and grasp areas shall be placed on the accessible surface of an item consistent with the removal direction.

11.6.3.3 Nonfixed Handles Design Requirements

{A}

Hinged, foldout, or attachable (i.e., nonfixed) handles shall comply with the following:

a. Locked or Use Position - Nonfixed handles shall have a stop position for holding the handle perpendicular to the surface on which it is mounted.

b. One-Handed Operation - Nonfixed handles shall be capable of being placed in the use position by one hand and shall be capable of being removed or stowed with one hand.

c. Tactile or Visual Indicators - Attachable/removable handles shall incorporate tactile and/or visual indication of locked/unlocked status.

11.6.3.4 Handle Dimensions Design Requirements

{A}

IVA handles for movable or portable units shall be designed in accordance with the minimum applicable dimensions in Figure 11.6.3.4-1.

Illustration	Type of handle	Dimensions in mm (in inches) (Bare hand) X	Y	Z
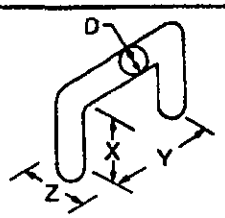	Two-finger bar One-hand bar Two-hand bar	32 (1–1/4) 48 (1–7/8) 48 (1–7/8)	65 (2–1/2) 111 (4–3/8) 215 (8–1/2)	75 (3) 75 (3) 75 (3)
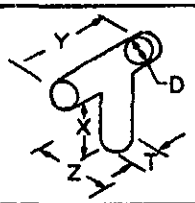	T-bar	38 (1–1/2)	100 (4)	75 (3)
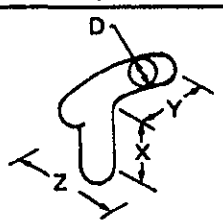	J-bar	50 (2)	100 (4)	75 (3)
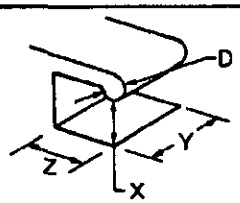	Two-finger recess One-hand recess	32 (1–1/4) 50 (2)	65 (2–1/2) 110 (4–1/4)	75 (3) 90 (3–1/2)
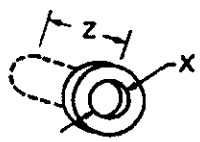	Finger-tip recess One-finger recess	19 (3/4) 32 (1–1/4)	– –	13 (1/2) 50 (2)

Curvature of handle or edge	Weight of Item	Minimum diameter	
(DOES NOT PRECLUDE USE OF OVAL HANDLES)	Up to 6.8 kg (up to 15 lbs) 6.8 to 9.0 kg (15 to 20 lbs) 9.0 to 18 kg (20 to 40 lbs) Over 18 kg (over 40 lbs) T-bar post	D = 6 mm (1/4 in) D = 13 mm (1/2 in) D = 19 mm (3/4 in) D = 25 mm (1 in) T = 13 mm (1/2 in)	Gripping efficiency is best if finger can curl around handle or edge to any angle of 2/3 π rad (120°) or more

Reference: 2, Figure 48, page 197

MSIS-18

Figure 11.6.3.4-1. Minimum IVA Handle Dimensions for IVA Applications

11.7 RESTRAINTS
{A}

11.7.1 Introduction
{A}

This section provides the design considerations, requirements, and example design solutions for personnel and equipment restraints. Portable and fixed foot restraints, body restraints, and equipment restraint devices are included.

The related topic of portable and fixed handholds and handrails are found in Paragraph 11.8, Mobility Aids. Placement of restraints within the space module is described in Paragraph 8.9, Mobility Aids and Restraints Architectural Integration. The integration of restraints with workstations is addressed in Paragraph 9.2.4.2.3, Work Station Restraints and Mobility Aid Design Requirements.

11.7.2 Personnel Restraints
{A}

11.7.2.1 Introduction
{A}

This section provides the personnel restraints design considerations, requirements, and examples. Foot restraints, body restraints, and sleep restraints are described.

11.7.2.2 Personnel Restraints Design Considerations
{A}

Personnel restraints are required at liftoff, during major thrusting maneuvers, microgravity/partial-gravity operations, and during return-to-earth operations. This section includes seat belts, shoulder harnesses, fixed and portable foot restraints, and body restraints. Donning/ doffing, loads, materials, color, temperature limits, and dimensional requirements are included for each type of personnel restraint.

(Refer to Paragraph 14.4, EVA Workstations and Restraints, for EVA restraint design considerations and requirements.)

(Refer to Paragraph 11.8, Mobility Aids, for the related topic of handholds and handrails.)

(Refer to Paragraph 9.2.4, Human/Workstation Configuration, for design considerations and requirements related to integration of restraints and workstations.)

Openings, holes, ductwork, and protrusions in and around equipment have been used by crewmembers as informal microgravity body restraints. Equipment designers must take this into account when designing equipment. These informal restraints are acceptable for short-duration tasks. They should not be the only method of restraint for long-duration operations where IVA foot restraints or fixed body restraints should be considered.

Foot restraints (and/or body restraints) may be required for tasks requiring precision. Unique foot restraint designs should be minimized and standardized design should be maximized. Any portion of the restraint worn on the foot shall be as low in mass as possible. In order to aid foot restraint ingress and egress, handholds that are located between the waist and shoulder should be available at all workstations. Commonalty requirements for foot restraint attachment, finish, durability, and color should be incorporated into the design.

Foot restraints can be built into the equipment or into the crewmember's shoes.

(Refer to Paragraphs 9.2.4.2.3, Workstation Restraints and Mobility Aids Design Requirements, and 8.9.3.2, IVA Restraint Locations Design Requirements, for foot restraint location requirements.)

11.7.2.3 Personnel Restraints Design Requirements
{A}

11.7.2.3.1 General Personnel Restraints Design Requirements
{A}

All EVA and IVA personnel restraints (i.e., seat belts, shoulder harnesses, body restraints, foot restraints, and sleep restraints) shall comply with the following requirements:

(Refer to Paragraph 14.4.3.4, EVA Crew Restraint Design Requirements, for EVA-unique requirements.)

a. Comfort - Restraint forces shall be reasonably distributed over the body to prevent discomfort and shall not require conscious effort to remain constrained.

b. Allowable Comfort Time - Comfort of the IVA restraint system shall allow for a four-hour uninterrupted use.

c. Muscular Tension - Restraint design shall minimize or eliminate muscular tension.

d. Anthropometric Range - All personnel restraints shall accommodate the specific population of users for whom the system is to be designed.

e. Microgravity Posture - Personnel restraints to be used in microgravity applications shall be designed for microgravity posture compatibility.

(Refer to Paragraph 3.3.4.3, Neutral Body Posture Data - Design Requirements, for specific anthropometric requirements.)

f. Cleaning and Repair - The personnel restraint system shall be capable of being cleaned and repaired on-orbit.

11.7.2.3.2 Foot Restraint Design Requirements
{A}

11.7.2.3.2.1 General Foot Restraint Design Requirements
{A}

The following general requirements apply to all fixed and portable foot restraints:

(Refer to Paragraph 14.4.3.4, EVA Crew Restraint Design Requirements, for EVA-unique foot restraint requirements.)

a. Range of Motion - All foot restraints shall maintain foot position to allow the crewmember a complete range of motion (roll, pitch, and yaw).

(Refer to Paragraph 3.3.3.2.2, Body Posture Design Considerations, for further information.)

b. Comfort - Foot restraints shall provide comfortable support.

c. Interchangeability - Attachment interfaces for foot restraints (portable-to-portable and fixed-to-fixed) shall be interchangeable throughout the space module.

d. Positive Retention - The foot restraint shall be positive and firmly hold the user in the desired position.

e. Load Reaction - Foot restraints shall provide the capability to react to loads applied by the crewmember.

f. Abrasion Resistance - Reinforcements shall be provided for any fabric areas exposed to high abrasion.

g. Ventilation - IVA foot restraints and covers shall allow ventilation to the feet.

h. Fixed Foot Restraints - The fixed foot restraint shall be capable of being removed for replacement/repair.

i. Portable Foot Restraints - The portable foot restraint shall be capable of being installed and removed easily and quickly without tools.

11.7.2.3.2.2 Foot Restraint Donning/Doffing Design Requirements

{A}

Foot restraints shall comply with the following donning and doffing requirements:

(Refer to Paragraph 14.4.3.4, EVA Crew Restraint Design Requirements, for EVA-unique foot restraint donning and doffing requirements.)

a. Donning - Foot restraints shall be attached or donned with minimum effort.

b. Quick Release - Rapid ingress/egress shall be inherent to all IVA foot restraints.

c. No-Hand Operation - The use of hands for placing/ removing the foot shall not be required for foot restraint ingress/egress.

d. Handholds - Handholds or structure between waist and shoulder shall be available at all foot restraint locations to aid foot restraint ingress and egress.

(Refer to Paragraph 8.9.3.1, Required IVA Mobility Aid Integration Design Requirements, for the specific requirements.)

e. Entrapment - All foot restraints shall minimize danger of entrapment. A positive means of releasing the foot from the restraint shall be provided.

11.7.2.3.2.3 Foot Restraint Loads Design Requirements

{O}

IVA foot restraints must meet the following load requirements:

(Refer to Paragraph 14.4.3.4, EVA Crew Restraint Design Requirements, for EVA restraint loads.)

a. Tension Loads - Foot restraints shall be designed to withstand a tension load of 445 N (100 lbf) as a minimum (see Figure 11.7.2.3.2.3-1.)

b. Torsion Loads - The restraints shall withstand a torsion load of 200 Nm (150 ft-lb) as a minimum with the torsion vector normal to the floor. (See Figure 11.7.2.3.2.3-1.)

c. Factor of Safety - The yield factor of safety shall be 1.10 and ultimate factor of safety shall be 2.00.

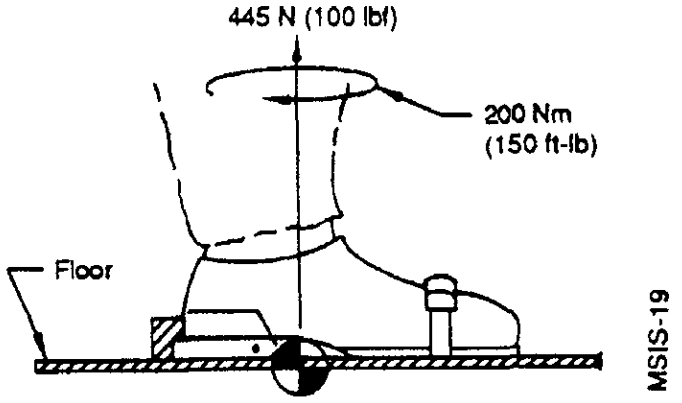

Reference: 1, Figure 4.2-3

Figure 11.7.2.3.2.3-1. IVA Foot Restraint Load Limits

11.7.2.3.2.4 Foot Restraint Durability and Color Design Requirements

{A}

The durability and color of IVA and EVA foot restraints shall comply with the following:

a. Durability - Finish shall be durable, smooth, and scratch resistant to prevent undue wear on footwear.

b. Color - Color for all foot restraints of a given type shall have a contrast ratio of approximately 10:1 or greater with the background.

11.7.2.3.3 Body Restraint Design Requirements

{A}

11.7.2.3.3.1 Body Restraint Donning/Doffing Design Requirements

{A}

The following crewmember body restraint donning and doffing requirements shall apply to all tether attachments, seat belts, and shoulder harnesses:

a. Latching Mechanisms - The latching mechanism attachment will require a positive action by the crewmember to both latch and unlatch the mechanism.

b. One-Handed Operation - The latching mechanism shall have the capability of being latched and unlatched with one hand.

11.7.2.3.3.2 Body Restraint Loads Design Requirements

{O}

The following load requirements shall apply to seat belts, shoulder harnesses, and IVA tethers:

(Refer to Paragraph 14.4.3.4, EVA Crew Restraint Design Requirements, for EVA-unique body restraint load requirements.)

a. Seat Belts and Shoulder Harnesses - IVA seat belts and shoulder harnesses installed at stations designated as occupied during launch and landing shall be designed so the occupant making proper use of the equipment will not suffer serious injury when the following ultimate inertia forces acting separately are imposed on the crewmember:

1. Downward (Eyeballs Up): 2.0 -Gz

2. Backward (Eyeballs Out): 9.0 -Gx

3. Sideward : 1.5 +/- Gy

4. Upward (Eyeballs Down): 4.5 +Gz , or any lesser force that will not be exceeded when the landing loads resulting from impact with an ultimate descent velocity of five ft/sec at design landing weight.

(Refer to Paragraph 5.3.3.1, Linear Acceleration Design Requirements for acceleration coordinate system and requirements.)

b. Body Harnesses - Body harnesses shall have lifting attach points (D-rings) which can be used in lifting or hoisting the crewmember during egress operations in a one-g environment. The body harness shall be designed to support the load of the crewmember while being lifted or hoisted. The body harness can be designed to be an integral part of the seat belt and shoulder harness restraint system or be designed as a separate harness to be worn in addition to the seat belt and shoulder harness restraint system.

c. Tether Attachments - IVA tether attachments shall be capable of sustaining a load of 756 N (170 lbs) along the longitudinal axis. They shall be designed so as to preclude any side loading.

d. Attach Points for Tether Attachment - IVA translation and mobility handhold tether attachment attach points shall be designed to a minimum ultimate load of 902 N (250 lbf) in any direction.

11.7.2.3.3.3 Body Restraint Finish and Color Design Requirements

{A}

Markings, labeling, and colors shall be in accordance with Paragraph 9.5.

11.7.2.3.3.4 Body Restraint Dimensional Design Requirements

{A}

The following dimensional requirements shall apply to all seat belts, shoulder harnesses, and tethers:

(Refer to Paragraph 14.4.3.4, EVA Crew Restraint Design Requirements, for EVA-unique restraint dimensional requirements.)

a. Commonalty - Seat belts, shoulder restraints, waist restraints, and tether attachments shall be uniform in size, shape, and method of operation within the limits of task performance and other design tradeoffs.

b. Size - Task requirements for which the attachment is designed shall dictate the actual size of the hooking and latch mechanism.

11.7.2.3.4 Sleep Restraints Design Requirements

{OP}

Sleep restraint design shall meet the following requirements:

a. Extremity Restraint - Sleep restraints shall include provisions to prevent leg and arm float and prevent the head from moving during sleep.

b. Trapped Air - Sleep restraint design shall eliminate excessive or unevenly distributed trapped air.

c. Individual Sleep Restraints - One sleep restraint shall be provided for each crewmember.

d. Stowage, Transport, Cleanability - Sleep restraints shall be easily stowable, transportable, and cleanable on-orbit.

e. Features - A sleep restraint shall incorporate the following features:

1. Adjustable, flexible restraint straps.

2. Arm slits.

3. Adjustable, removable pillows/headstrap.

4. Adjustable thermal protection.

f. Opening/Closing - A sleeping bag opening/closing device that extends the full length of the bag shall be provided.

g. Torso Restraint - Torso restraining straps shall be provided to allow the crewmembers to restrain themselves in their choice of sleeping position.

h. Opening/Closing - The opening/closing device shall be capable of easy use, including quick opening in case of emergency.

i. Opening/Closing Device Replacement - The opening/ closing device shall be easily replaceable.

11.7.2.4 Example Personnel Restraint Design Solutions

{O}

Figure 11.7.2.4-1 shows the sleep restraint configuration used on the orbiter.

Figure 11.7.2.4-2 shows examples of foot restraints used in the Skylab.

Figure 11.7.2.4-3, show an example of a lower leg restraint available on the Skylab.

Figure 11.7.2.4-4 lists the types of body restraints versus crew tasks that were used on the Skylab.

Skylab flight experience demonstrated that foot restraints are adequate for most tasks. A pelvic restraint, for use with portable foot restraints at the Apollo Telescope Mount Control Station, was not required. The adjus-

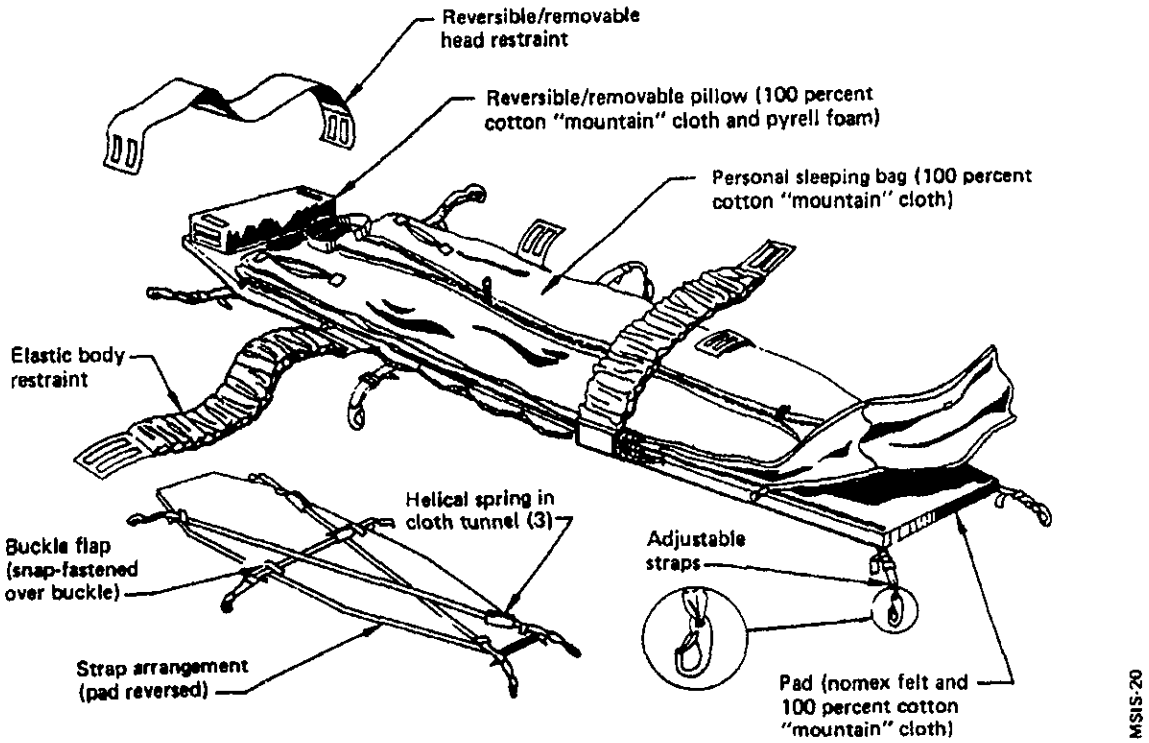

Reference: 150, page 3.18-26

Figure 11.7.2.4-1. Standard Sleep Restraint

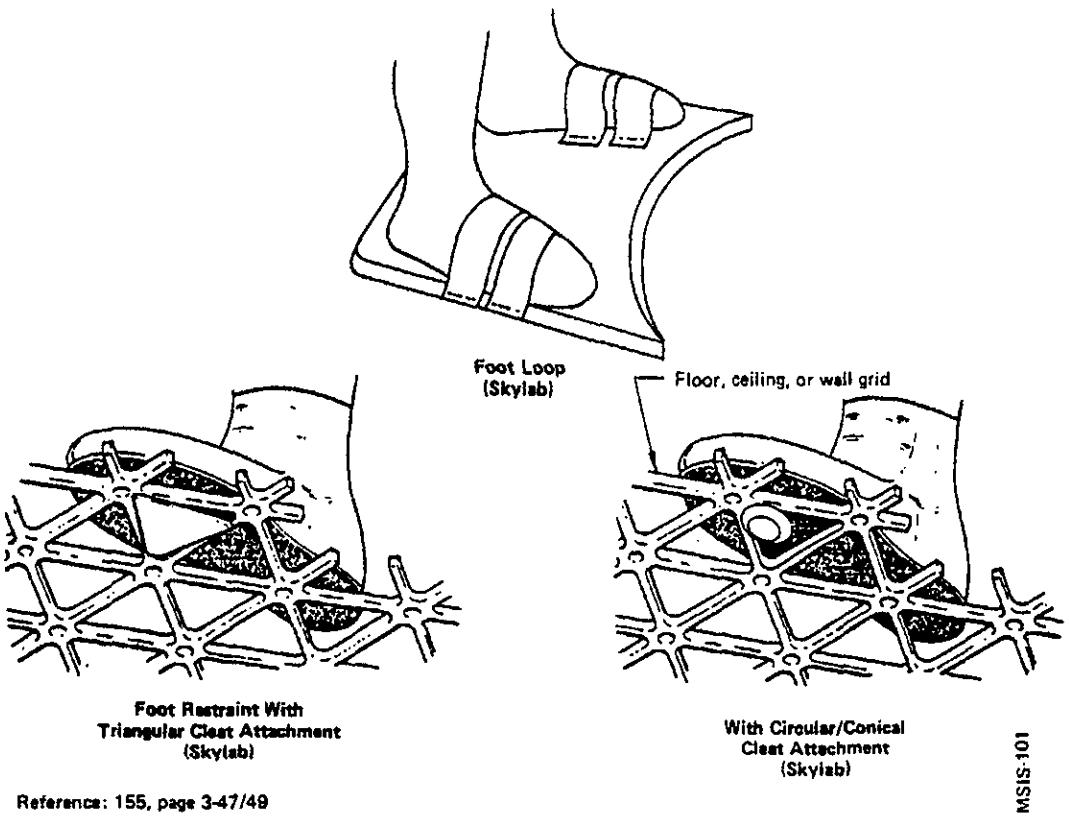

Reference: 155, page 3-47/49

Figure 11.7.2.4-2. Example Foot Restraints

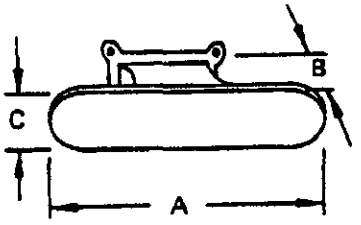

Dimensions

A = 432 mm (17.0 inches)
B = 127 mm (5.0 inches)
C = 76 mm (3.0 inches)

Fixed Lower Leg Restraint - Skylab

Reference: 155, page 3-51/53

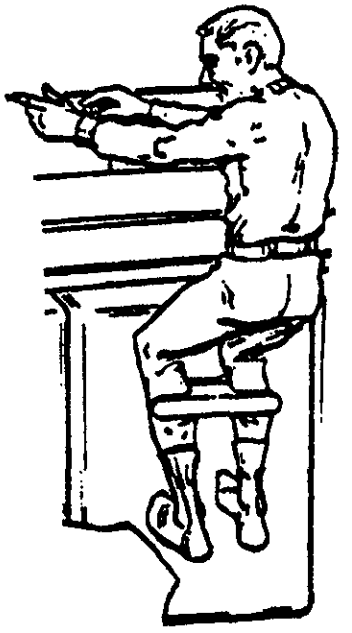

MSIS-102

Figure 11.7.2.4-3. Example Lower Leg Restraint

Crew task	Body restraint mode		
	Hand-hold	Toe (foot loop)	Foot (triangular cleat)
Meal preparation	X		X
Eating	X		X
Flight data management	X		X
Consoles/vehicle operations	X		X
Body waste collection	X	X	
Activation/deactivation	X		X
Experiment operations	X		X
General crew task, maint. and housekeeping	X		X
Whole-body cleaning	X	X	
Stowage operations	X		X
Equipment transfer	X		X
Personal hygiene	X	X	X

MSIS-103

Reference: 155, Page 3-54

Figure 11.7.2.4-4. Skylab Crew Tasks Vs. Body Restraints

table grid restraint provided adequate force cancellation, stability, and reach capability.

For most simple, short-term tasks a handhold or any graspable structure provides sufficient restraint.

11.7.3 Equipment Restraints

{A}

11.7.3.1 Introduction

{A}

This section provides the design considerations, requirements, and examples of equipment restraints required to retain tools and equipment at workstations. These equipment restraints include tethers, tape, bungee cords, Velcro, and other such devices.

(Refer to Paragraph 11.9, Fasteners, and Paragraph 11.8.3, Equipment Mobility Aids, for related equipment restraint design considerations and requirements.)

(Refer to Paragraph 8.9, Mobility Aids and Restraints Architectural Integration, for equipment restraint location design considerations and requirements.)

(Also refer to Paragraph 13.4.3.2, Hardcopy Information Management Design Requirements, for specific requirements for restraining documents and loose papers.)

11.7.3.2 Equipment Restraint Design Considerations

{A}

Temporarily restraining equipment in microgravity is very important. Everything from large equipment modules to small nuts and bolts needs to be secured at the storage and work sites to keep them from floating away. A variety of means have been employed in previous space modules (e.g., gray tape, bungee cords, Velcro, tethers, and bags.) with varying degrees of success.

The restraints need to be standardized, multipurpose, easy to use, require no tools to operate, and easily stowable.

Adhesive-type restraints (tapes) need to be easy to peel off of the roll, easy to tear, and should not leave an adhesive residue when removed from a surface.

11.7.3.3 Equipment Restraint Design Requirements

{A}

All IVA and EVA equipment restraints shall be designed to the following requirements:

a. Hand Operated :

1. Equipment restraints shall be designed such that tools are not required to attach or detach the restraint.

2. Equipment restraints shall be designed such that they can be attached/detached by either the left or right hand.

b. Blind Operation - The equipment restraints shall be designed such that they can be attached/detached without having to look at them.

c. Adjustability - Provide the capability to adjust the restraint to adapt to a wide range of sizes of the items to be restrained and to provide the user with the capability to restrain the item at a preferred location relative to the restraint attachment points. This does not preclude fixed- length tethers used for specific applications.

d. Positive Restraint - The restraint shall secure the item in such a way that the item will not come loose due to inadvertent touching, air currents, vehicle dynamic motions, or due to other predictable environmental conditions.

e. Cause No Damage - The equipment restraint shall be designed such that it cannot pinch, abrade, or cut the item to be restrained or the interfacing surfaces and adjacent hardware.

f. No Adhesive Residue - Adhesive equipment restraints shall not leave an adhesive residue on the item or on the spacecraft surface when the adhesive restraint is detached.

g. Tethers :

1. Common attachment method - All equipment tethers shall use a common attachment method.

2. Tether attachment points - All equipment items that require tethering shall have a standardized tether hook receptacle as an integral part of the item. This standardized receptacle shall also be provided on the interfacing surface to which the item is to be secured.

3. Tether lock status indication - The tether hook shall be designed in such a way that it will be easy to recognize when the hook is locked/unlocked in both day and night lighting conditions.

h. Loads :

1. Minimum load - The minimum design load shall be based on the expected crew-imposed and environmental loads to be applied to the item in the normal operating conditions.

2. Maximum load - The maximum design load shall be based on the resultant load imposed by a crewmember attempting to dislodge a restrained item that has become entrapped in adjacent hardware. The stress of this activity should not exceed the design load of the surface to which the restraint is attached or the design load of the entrapping hardware (i.e., the restraint should break before the item, attachment surface, of entrapping hardware breaks).

(Refer to Paragraph 4.9.3, Strength Design Requirements, for definition of maximum crew imposed loads.)

i. Color - Equipment restraints shall be of a standardized color to distinguish them from other types of loose equipment or items that will be restrained.

(Refer to Paragraph 9.5.3.2, Coding Design Requirements, for color selection criteria.)

j. Grounding :

(Refer to Paragraph 6.4.3, Electrical Hazards Design Requirements, for specific requirements.)

k. Commonalty - Provide Commonalty of design for equipment restraints to the maximum extent possible.

l. Individual Restraints :

1. Individual restraints shall be designed to restrain one hardware item only.

2. Individual restraints shall be used when the restrained item is large in size, sensitive, or delicate or when attachments are difficult or complex in operation

m. Group Restraints :

1. Group restraints shall be used to restrain like-sized items wherever possible.

2. Group restraints shall provide a system that allows the removal of one item at a time.

n. Throw-Away Restraints - Any restraint device that is utilized during vehicle launch, and upon activation or usage removal is discarded, shall meet the following requirements:

1. Large throw-away restraints shall be designed to be torn apart or be of soft, crushable materials to accommodate the openings of onboard trash collection/disposal systems.

2. The throw-away restraints shall be color coded as a throw-away item.

(Refer to Paragraph 9.5.3.2, Coding Design Requirements, for specific requirements.)

o. Velcro - When Velcro is used as a restraint, the item to be restrained will be equipped with hook-type Velcro and the restraining surface will be equipped with pile-type Velcro.

11.7.3.4 Example Equipment Restraint Design Solutions

{O}

Figure 11.7.3.4-1 shows examples of previously used equipment restraints.

a. Temporary Stowage Bags - These bags provided an acceptable method of temporary retention of equipment during Skylab missions. These bags should be designed so that the contents are visible (i.e., use transparent plastic or netting).

b. Gray Tape - Apollo, Skylab, and shuttle missions have used gray tape extensively as a temporary restraint for IVA operations. Use in EVA was not always acceptable because the adhesive capabilities may have been affected by temperature extremes.

c. Cable Restraint Clips - These were used extensively in Apollo and Skylab missions.

d. Velcro - Velcro provides an acceptable equipment restraint.

NOTE: The adhesive holding the Velcro pad must be stronger than the hook/pile retention capability. Adhering qualities of the hook and pile are quite material dependent. Temperature constraints may prohibit EVA use.

e. Straps With Snaps and/or Velcro

NOTE: Crewmembers require handholds or foot restraints to mate female snaps to spacecraft structure studs in microgravity environment. Snaps are also difficult to align during EVA.

f. Metal and Elastic Bungee Springs with Snaps or Flat Hooks - These are recommended for IVA use only. These were the most widely accepted retention devices used on Apollo, Skylab, and shuttle missions.

NOTE: Both the metal springs and the elastic tend to stretch after extended use and snaps are difficult to attach to structure-mounted interfacing studs in a microgravity environment.

g. EVA Tethers - Fixed length, adjustable, and retractable tethers have been used extensively in EVA operations but can also be used for IVA operations.

h. Rubber Bands - Experience on Skylab missions has shown that rubber bands proved to be an excellent device to hold flight manuals and checklists from inadvertently opening in microgravity.

i. Other Devices - There are many other equipment restraint devices that have been tried. These include pip pins, "dogleash" clips, pinch clamps, and snap rings.

(Refer to Reference 155, Section 3.2.2, for examples of equipment restraints used on the Skylab.)

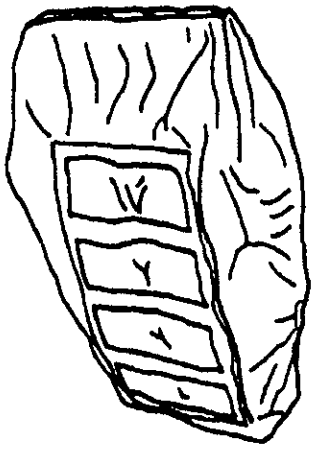

Temporary Stowage Bag

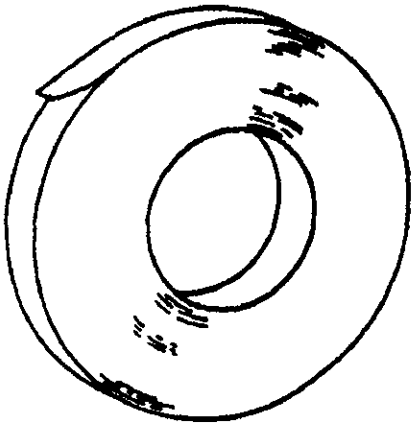

Tape

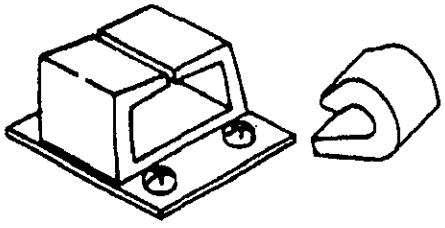

Cable Restraint Clips (Typical)

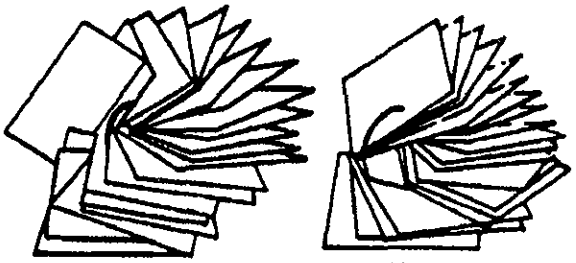

Pile Hook

Velcro Kit

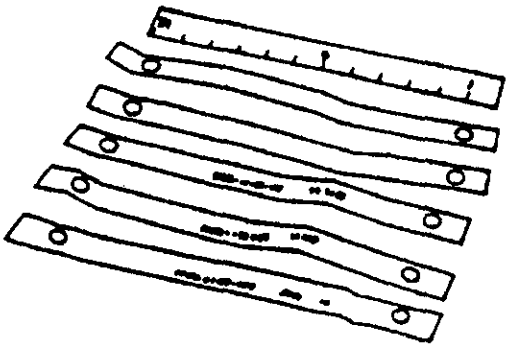

Strap (Typical)

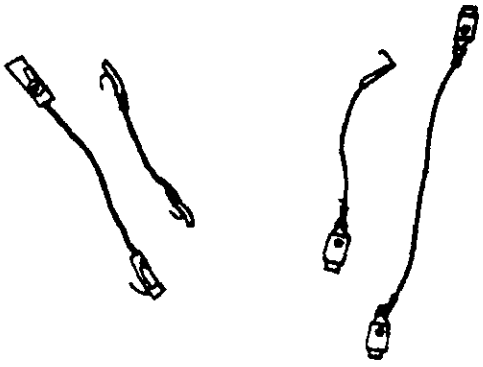

Metal Spring Bungees

Elastic Cord Bungees

MSIS-21

Reference: 150, page 3.4-2

Figure 11.7.3.4-1. Equipment Restraint Examples

11.8 MOBILITY AIDS
{A}

11.8.1 Introduction
{A}

This section contains design considerations, requirements, and examples for personnel and equipment mobility aids. Design criteria include dimensions, coding, texture, design loads, temperature limits, and mounting.

(Also, refer to Paragraph 8.9, Mobility Aids and Restraints Architectural Integration.)

Items such as tethers, hooks, restraints, and temporary stowage devices which interface with mobility aids are described in Paragraph 11.7. Handles and grasp areas on the portable equipment covered are detailed in Paragraph 11.6.

11.8.2 Personnel Mobility Aids
{A}

11.8.2.1 Handhold and Handrail Design Considerations
{A}

Handholds and handrails are the hardware interfaces used for crewmember mobility aids. They are necessary in both IVA and EVA applications for crewmembers to use as they move from place to place during the performance of their tasks.

Handholds or handrails may also provide local protection to the vehicle/payload components. They also serve as convenient locations for temporary mounting, affixing, or restraint of loose equipment and as attachment points for equipment and personnel safety tethers. Handholds provide adequate restraint for low force, short- time manual tasks such as inspection, monitoring, and control/switch actuation.

Handholds and handrails can be permanently installed or portable.

Handhold areas are typically located around the edges of hatches, bulkheads, equipment, containers, and stowage lockers.

(Refer to Paragraph 8.9, Mobility Aids and Restraints Architectural Integration, for details.)

Handholds and handrails are primarily fabricated from metals. Other rigid, semi-rigid, or cloth materials may be used in accordance with Reference 24.

(Refer to Paragraph 14.5.2.2, EVA Mobility Aids Design Considerations, for EVA-unique considerations.)

11.8.2.2 Handhold and Handrail Design Requirements
{A}

This section provides the design requirements for handholds and handrails. These requirements shall apply to both IVA and EVA applications except where EVA-unique requirements are specifically identified.

11.8.2.2.1 Handhold and Handrail Dimensions Design Requirements
{A}

All handholds and handrails shall adhere to the following cross-section design requirements:

a. Standardization - Cross-sectional dimensions of handholds and handrails shall be standardized throughout the space module to provide a uniform interface for mounting items such as brackets and tether hooks.

b. Cross-Section Shape - Handholds and handrails cross-section shape shall be designed such that the crewmember's hand or attached brackets will be stabilized (i.e., circular cross-section shall not be used). Refer to Figure 11.8.2.2.1-1, IVA Handhold Cross Section.

c. IVA Handhold Minimum Dimensions - All IVA handholds shall have a minimum of 14 cm (5.5 in.) grip length and a minimum of 3.8 cm (1.5 in.) clearance between the lower surface of the handgrip and the surface on which it is mounted. (Reference Figure 11.8.2.2.1-2.)

(Refer to Paragraph 11.8.2.2.3, Handhold and Handrail Texture Design Requirements, for other shape requirements.)

(Refer to Paragraph 14.5.3.2, EVA Mobility Aids Design Requirements, for EVA-unique handhold/handrail dimensions.)

11.8.2.2.2 Handhold and Handrail Coding Design Requirements

{A}

Handholds and handrail coding shall be such that the crew may locate them with ease:

a. Standard Color - The color of all handholds/ handrails shall be standardized within the space vehicle.

b. Contrast Ratio - The color valve shall have a contrast ratio of 5:1 or greater with the background where distinctive identification is required.

(Refer to Paragraph 9.5.3, Labeling and Coding Design Requirements, for other general and specific color coding requirements.)

11.8.2.2.3 Handhold and Handrail Finish Design Requirements

{A}

Handhold and handrail texture shall be such that the crew may locate them by feel and grasp them with ease:

a. Identical Finish - The finish of all handholds/ handrails shall be identical to enhance identification.

b. Non-Slip Surface - Handholds and handrails shall have a non-slip surface with no burrs, sharp edges, or protrusions.

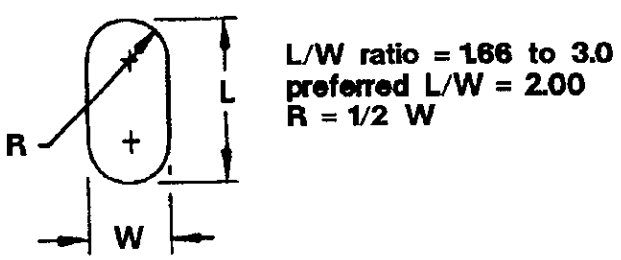

Reference: 1, Figure 4.1-4, page 4.1-2
With Updates

MSIS 22 REV. A

Figure 11.8.2.2.1-1 IVA Handhold Cross Section

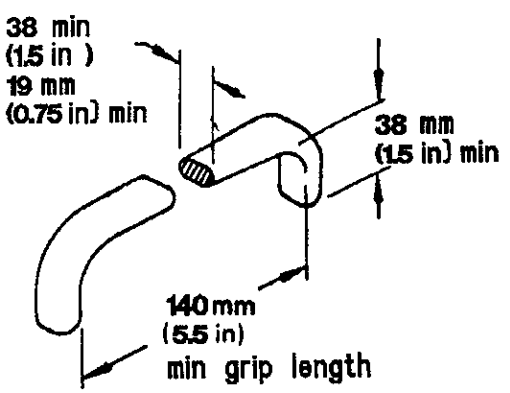

Reference, Figure 4.1-5, page 4.1-2
With Updates

MSIS23 Rev. B

Figure 11.8.2.2.1-2 IVA Handhold Dimensions

(Refer to Paragraph 6.3.3, Mechanical Hazards Design Requirements, for other applicable requirements.)

c. Durability - The finish of all handholds and handrails shall be resistant to scratches, wear, flaking, and pealing.

11.8.2.2.4 Handhold and Handrail Design Loads Design Requirements

{O}

All fixed and portable IVA handholds and handrails shall be designed to a minimum ultimate load of 1113 N (250 lbs) applied in any direction without failure or damage that precludes full utilization by crewmembers.

(Refer to Paragraph 14.5.3.2, EVA Mobility Aid Design Requirements, for EVA-unique handhold/handrail design load requirements.)

11.8.2.2.5 Handhold and Handrail Temperature Design Requirements

{A}

Surface temperature design requirements for handholds and handrails differ with the particular use (IVA or EVA). IVA handhold/handrail shall adhere to the requirements in Paragraph 6.5.3, Touch Temperature Design Requirements. EVA handhold/handrail shall adhere to the requirements in Paragraph 14.2.3.11 EVA Touch Temperature and Pressure Design Requirements and 14.5.3.2 h, EVA Mobility Aids Design Requirements

(Refer to Paragraph 6.5.3, Surface Touch Temperature Design Requirements, for IVA handhold and handrail surface temperature design requirements.)

(Refer to Paragraph 14.5.3.2, EVA Mobility Aid Design Requirements, for EVA-unique handhold and handrail surface temperature design requirements.)

11.8.2.2.6 Handhold and Handrail Mounting Design Requirements

{A}

The following requirements shall apply to all handhold and handrail mounting:

a. Stability - All fixed and portable handholds and handrails shall be designed so that when installed there is no instability (i.e., looseness, vibration, or slippage).

b. Portable Handhold and Handrail Lock Status Indication - Portable handhold and handrails shall provide a positive indication of when they are in the locked position.

c. Visibility and Accessibility - Handholds and handrails shall be mounted so that they are clearly visible and accessible.

(Refer to Paragraph 8.9.3.1, IVA Mobility Aid Locations - Design Requirements, for specific requirements.)

(Refer to Paragraph 11.8.2.2.2, Handhold and Handrail Coding Design Requirements, for color coding requirements.)

d. Handhold Removal - Fixed handholds shall be removable with common tools.

e. Safety - Handrails and associated mounting provisions shall be designed so as to preclude snagging of body, clothing, and/or loose equipment (e.g., cables).

11.8.3 Equipment Mobility Aids

{A}

11.8.3.1 Equipment Mobility Aid Design Considerations

{A}

The mobility aid design considerations for equipment are as follows:

(Refer to Paragraph 14.5.2.6, EVA Equipment Transfer Design Considerations, for EVA-unique considerations.)

a. Tethers may be used on equipment items being transferred but are not generally required for IVA.

b. Mechanical transfer aids (e.g., taut line, extendable boom) should be provided for use in guiding large (size and/or mass) equipment items during transfer.

c. Equipment transfer of two crewmembers should be considered where transfer of large equipment may cause injury to the crewmember or damage to the space module.

d. Removable equipment mobility aids should be provided where needed to provide clearance and access passage.

11.8.3.2 Equipment Mobility Aid Design Requirements

{A}

The following equipment mobility and requirements are applicable to both IVA and EVA:

(Refer to Paragraph 11.6.3, Handle and Grasp Area Design Requirements, for interface requirements.)

(Refer to Paragraph 11.7.3.3, Equipment Restraint Design Requirements, for interface requirements.)

(Refer to Paragraph 14.5.3.6, EVA Equipment Transfer Design Requirements, for EVA unique requirements.)

a. Maximum Movable Equipment Size - Equipment size shall be limited to the dimensions and configuration of the smallest hatch or opening through which the equipment must pass.

b. Access - Design shall provide adequate area around the mass for manipulation and visibility.

c. Containers for Small Items - Containers shall be provided for simultaneous transfer of small equipment items.

1. Single items shall be individually removable

2. The container shall be easily attached to the crewmember and space module at the worksite.

d. Bump Protection - Bump protection shall be provided. Bump protectors they shall be designed so they can be used as mobility aids.

11.8.3.3 Example Mobility Aids Design Solutions

{O}

In the Apollo, Skylab, and STS programs, the handhold and handrail cross-sections were as shown in Figure 11.8.2.2-1. The IVA handhold configuration was as shown in Figure 11.8.2.2-2.

Other methods successfully employed as aids in transferring large equipment include:

a. A line attached at two points.

b. A "pulley clothesline" arrangement.

c. An extendable boom.

(Refer to Paragraph 14.5.3.2, EVA Mobility Aid Design Requirements, for the example of EVA handrail dimensions.)

11.9 FASTENERS

{A}

11.9.1 Introduction

{A}

This section includes fastener design considerations, requirements, and example design solutions. Fasteners include items such as hand-actuated and tool-actuated screws, bolts, latches, catches, clamps and connectors.

This section provides fastener data that are generally applicable to both IVA and EVA. IVA-unique fastener requirements are provided in Paragraph 11.9.3.4. EVA-unique fastener requirements are provided in Paragraph 14.6.3.

11.9.2 Fastener Design Considerations

{A}

Fasteners used by on-orbit crewmembers include those that are used on access doors, containers, panels, equipment stowage, doors, covers, restraints, and ORUs.

NOTE: The following design considerations pertain to human engineering considerations only. Refer to machine design reference documents or manufacturer's literature for fastener structural and mechanical design considerations and requirements.

a. Standardization - To minimize the number of types of tools required to operate fasteners, to minimize the crew workload required to round up the appropriate tools, and to minimize the potential of trying to use the wrong tool, the tool-actuated fasteners should be of a common type and size. Hand-actuated fasteners should also be of a common type and size to minimize the frustration of having to remember how to operate a variety of latches and fasteners. To be avoided is the selection of fasteners that are so similar in appearance that an attempt might be made to insert one in the wrong location; for example, small differences in screw length or diameter, and different thread spacings on similarly sized screws. Each type of fastener needs to be readily distinguishable from all others.

b. Hand-Actuated Versus Tool-Actuated Fasteners - The fastener type, hand-actuated or tool-actuated, needs to be selected based on the force application capabilities of the crewmember and the structural loading on the fastener.

Hand-actuated fasteners are generally preferred over tool-actuated fasteners when a hand-actuated fastener can meet the size/clearance and the structural requirements for the particular application. Hand-actuated fasteners are preferred as they will minimize the crewmember's workload unless a large number of fasteners are required on a hardware item. In this case, power-tool activated fasteners are preferred.

The crewmember's force application capabilities depend on the crewmember's restraint and the surface area provided for gripping by the tool or by hand. Hand- actuated fasteners are generally more easily operated as the grip area increases. The relationship between fastener head size, hand torque capabilities, and crewmember restraint is shown in Figures 11.9.2-1 and 11.9.2-2. The effect of grip surface area on the torquing capability of a fifth percentile male is shown in Figure 11.9.2-3. Torquing capability data for the female needs to be developed. American female upper body strength is generally considered to be from half to two-thirds that of the American male equal percentile.

(Refer to paragraph 14.6.3.2, EVA Fastener Design Considerations, for EVA-unique fastener torquing capabilities.)

Hand-actuated fasteners need to be durable enough that they can be actuated by a tool with reasonable care.

c. Frequency of Use - Select a fastener type that is suited to the frequency of use. Fasteners used frequently should be very easy to actuate in a short time to minimize crew workload. Frequently used fasteners must be durable enough to take repeated actuations without wearing out. Quick connect/disconnect fasteners, e.g., quarter-turn or half-turn fasteners, are always preferred in frequent-use applications where low torquing is suitable. Where multi-turn fasteners are required, it is recommended that a fastener shall

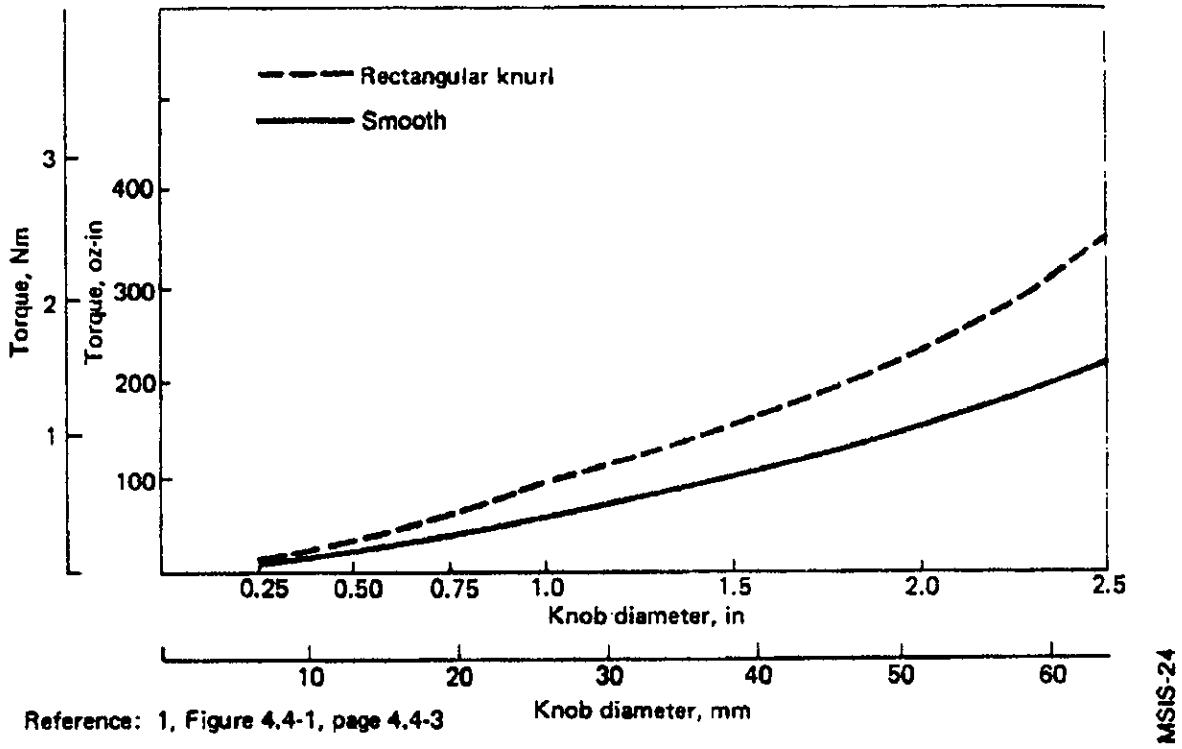

Reference: 1, Figure 4.4-1, page 4.4-3

Figure 11.9.2-1. Hand Torque Capabilities When Restrained by Both Feet, Both Feet and Pelvis, or Both Feet and One Hand (IVA)

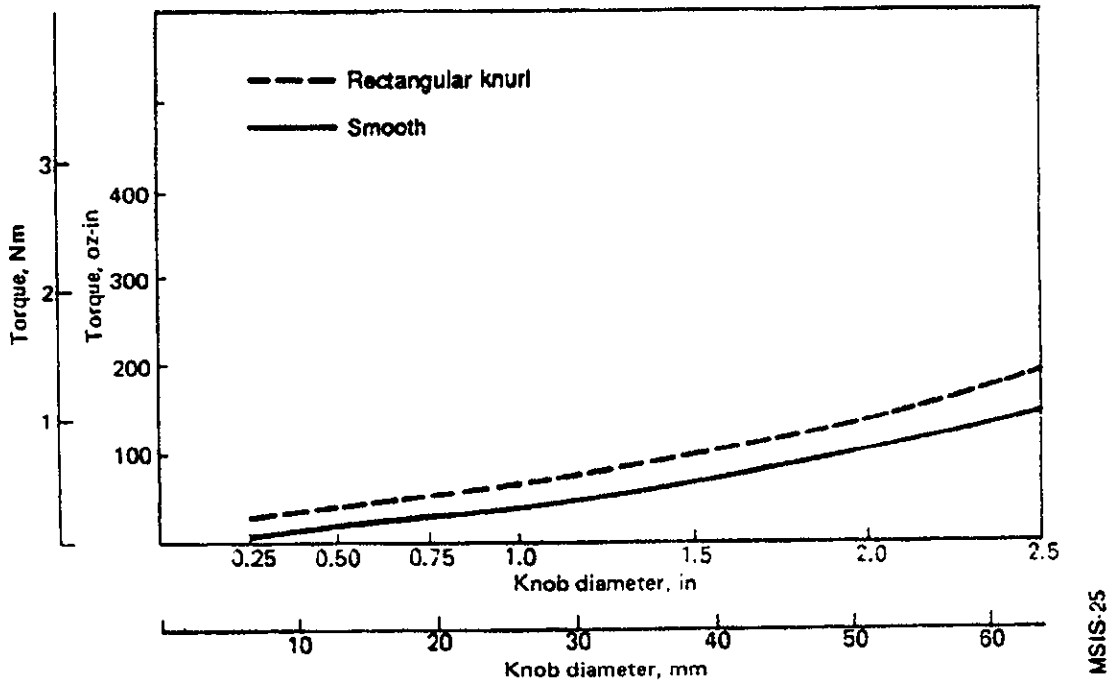

Reference: 1, Figure 4.4-5, page 4.4-2

Figure 11.9.2-2. Hand Torque Capabilities When Restrained by One Hand (IVA)

Knob diameter		Rim surface					
		Rectangular knurl		Diamond knurl		Smooth	
		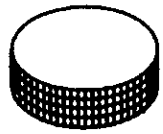		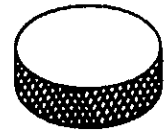		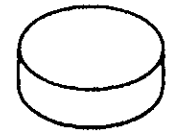	
cm	in.	Ncm	lb-in	Ncm	lb-in.	Ncm	lb-in
0.3	1/8	2.3	0.2	3.4	0.3	0.3	0.03
0.6	1/4	8.8	0.6	7.9	0.7	2.3	0.2
1.0	3/8	11.3	1.0	12.4	1.1	4.5	0.4
1.3	1/2	14.7	1.3	17.0	1.5	6.8	0.5
1.6	5/8	22.6	2.0	20.3	1.8	9.0	0.8
1.9	3/4	27.1	2.4	27.1	2.4	15.8	1.4
2.2	7/8	32.8	2.9	32.8	2.9	15.8	1.4
2.5	1	45.2	4.0	40.7	3.6	17.0	1.5
3.2	1–1/4	44.1	3.9	49.7	4.4	22.6	2.0
3.8	1–1/2	63.3	5.6	59.9	5.3	38.4	3.4
4.4	1–3/4	81.4	7.2	83.6	7.4	42.9	3.8
5.1	2	97.2	8.6	91.5	8.1	50.9	4.5
5.7	2–1/4	116	10.3	116	10.3	71.2	6.3
6.4	2–1/2	140	12.4	131	11.6	93.8	8.3
7.0	2–3/4	174	15.4	173	15.3	88.1	7.8
7.6	3	181	16.0	179	15.8	94.9	8.4
8.9	3–1/2	220	19.5	244	21.6	147	13.0
10.2	4	280	24.8	290	25.7	164	14.5
11.4	4–1/2	320	28.3	330	29.2	208	18.4
12.7	5	380	33.6	392	33.8	244	21.6

Reference: 1, Table 4.4-1, page 4.4-3

MSIS-26

Figure 11.9.2-3. Torque by Knob Size (Values for 5th Percentile Male)

fasten or unfasten in less than ten turns.

d. Clearance and Access - Adequate clearance needs to be provided around fasteners for the crewmember to obtain hand access, to have adequate tool clearance, and to have adequate wrenching space. Sockets, extensions, lever arms, etc., should receive special consideration for access and clearance. Consider that it might take two hands or a power tool to manipulate, breakaway, or remove stuck fasteners. Recessed fasteners should be avoided. Fastener mounting holes should be large enough to allow starting fasteners without perfect alignment.

e. Bare Hand or Gloved Actuation - When selecting fasteners, either hand-actuated or tool-actuated, it is necessary to consider whether the fasteners or the tool will be manipulated by the bare hand or with a pressurized glove.

f. Safety Considerations - Exposed fasteners need to be selected so that they will not snag clothing or cause injury to the crewmembers as they move about. Fasteners and latches should not spring open and cause injury to the crewmember when the fastener or latch is disconnected.

g. Minimum Number of Fasteners - Minimize the number of fasteners used in an application.

h. Tool-Actuated Fastener Head Type - High torque applications should use internal (Allen) or external hex-head styles.

i. Fastener Replacement - It is necessary to consider how stripped, worn, or damaged fasteners can be replaced. Avoid fasteners that are 1) an integral part of the equipment (e.g., threaded studs) or 2) countersunk.

j. Dual-Purpose Fasteners - Fasteners which perform a dual purpose may be used (e.g., a lock handle may be designed to serve as an extra handhold).

k. Cotter Keys and Safety Wire - The use of cotter keys and safety wire should be avoided.

l. Fastener Material - It is recommended that for threaded fasteners that the replaceable component be made of a softer material than the non-replacement component.

m. Thread Lubrication - The selection of thread lubricants should be addressed as part of the design process.

n. Thread Fastener Installation/Replacement - Thread fasteners should be installed with torque limiting tools - these tools should be available on-orbit.

11.9.3 Fastener Design Requirements {A}

This section provides the fastener design requirements. Paragraph 11.9.3.1 provides general fastener design requirements. Paragraph 11.9.3.2 provides requirements that are applicable to hand-actuated fasteners. Paragraph 11.9.3.3 provides requirements that pertain to tool-actuated fasteners. Paragraph 11.9.3.4 provides the design requirements that pertain to IVA fasteners.

(Refer to Paragraph 14.6.3.3, EVA Fasteners Design Requirements, for the EVA-unique design requirements.)

11.9.3.1 General Fastener Design Requirements

{A}

This section provides the fastener design requirements that pertain to both IVA and EVA applications.

a. Commonalty - The number and diversity of fasteners shall be minimized commensurate with the structural requirements imposed by the physical environments.

b. Easily Distinguishable - Where different types of fasteners must be used, they shall be such that they are readily distinguishable from each other.

c. Hand-Actuated Fasteners Preferred - Hand-actuated fasteners shall be given preference over tool-actuated fasteners, provided that size, location, and structural constraints are met.

(Refer to Paragraph 11.9.3.2, Hand-Actuated Fastener Design Requirements, for specific requirements.)

(Refer to Paragraph 11.9.3.3, Tool-Actuated Fastener Design Requirements, for specific requirements.)

d. Other Devices in Lieu of Fasteners - Optimum use shall be made of mechanical devices (e.g., hinges and tongue-and-slot catches) to minimize the number of fasteners.

e. Captive Fasteners - All fastener components intended for crew interaction shall be captive. All replaceable fasteners shall be amenable to loose parts control and a means of fastener containment and/or restraint shall be incorporated in the fastener removal/replacement system.

f. Accessibility :

(Refer to Paragraph 11.2.3.6, Tool Access Design Requirements, for specific tool clearance dimensions.)

1. Location Near Corners - Fasteners shall be located far enough away from internal corners, wall edges, flanges, etc., that they can be manipulated with ease.

2. Separation - Fasteners shall be located far enough apart so there is adequate hand or tool clearance.

3. Location Near Adjacent Equipment - If a component is to be mounted near other pieces of equipment, fasteners shall be located away from the edges of the adjacent equipment, obstructions, or surfaces that will prevent the attachment of tools.

4. Direct Access - Locate fasteners so that they can be actuated without removing other parts or units first.

5. Access Holes - Covers or shields through which mounting fasteners must pass for attachment to the basic chassis of the unit shall have large enough holes for passage of the fastener without precise alignment (and tool/hand if tool/hand is required to replace).

g. One Handed Actuation - All fasteners shall be designed to be actuated by one hand.

h. Engagement Status Indication - Incorrect engagement of fasteners shall be apparent.

i. Multiple Fasteners :

1. Number of Fasteners - When several fasteners are required, the design shall use the minimum number of the largest size fasteners of identical type.

2. Arrangement - When several fasteners are used on one item, they shall be arranged so that the unit can be assembled in only the correct manner.

j. Safety - Fasteners shall be designed so as to preclude injury to the crewmember when the fastener is released.

k. Labeling - Appropriate markings shall be placed on fasteners that can be actuated by either hand or tool.

(Refer to Paragraph 9.5, Labeling and Coding, for specific considerations and requirements.)

l. Replacement - All fasteners shall be designed for on-orbit replacement.

(Refer to Paragraph 11.2.3.2 d., Fastener Tools, for specific requirements.)

11.9.3.2 Hand-Actuated Fastener Design Requirements

{A}

In addition to the general fastener design requirements given in Paragraph 11.9.3.1, IVA and EVA hand-actuated fasteners shall be designed to the following requirements:

a. One-Handed/Either-Hand Actuation - Hand-actuated fasteners shall be designed to be actuated by one hand and by either the left or right hand.

b. Designed for Launch and On-Orbit - Fasteners shall be designed to meet the launch loads as well as on-orbit loads.

c. Fastener Knobs - Fastener knobs shall be textured.

(Refer to Paragraph 6.3.3, Mechanical Hazards Design Requirements, for specific safety design requirements.)

d. Quick-Opening Fasteners - Quick-opening captive fasteners shall:

1. Require a maximum of one complete turn to operate (quarter-turn fasteners are preferred).

2. Require only one hand to operate.

3. Be positive locking in open and closed position.

e. Locking Threaded Fasteners - Hand-actuated threaded fasteners shall have a locking feature that provides an audible, tactile, or visual feedback to the crewmember. Such locking features shall assure that threaded fasteners will not un-thread themselves without crew actuation.

f. Pin Fasteners (IVA) :

1. Alignment - Hardware utilizing pin fasteners shall be designed to accommodate mis-alignment of holes caused by on-orbit distortions of primary and secondary equipment.

2. Locking devices - Locking devices used in conjunction with pin fasteners shall be made accessible and easily visible.

(Refer to Paragraph 14.6.3.3, EVA Fastener Design Requirements, for EVA use of pin fasteners.)

g. Over-Center Latches :

1. Non-self-latching - Over-center latches shall include a provision to prevent undesired latch element realignment, interference, or reengagement.

2. Latch lock - Whenever possible, latch catches shall be spring loaded to lock on contact, rather than using a positive locking device. If positive locking is necessary, provide a latch loop and locking action.

3. Latch handles - If the latch has a handle, locate the latch release on, or near the handle so it can be operated with one hand.

h. Safety Wire - Safety wires shall not be used on fasteners.

11.9.3.3 Tool-Actuated Fastener Design Requirements

{A}

In addition to the general fastener design requirements given in Paragraph 11.9.3.1, IVA and EVA tool-actuated fasteners shall meet the following design requirements:

(Refer to Paragraph 11.9.3.4, IVA Fastener Design Requirements, for IVA-specific tool-actuated fastener requirements.)

(Refer to Paragraph 11.2.3, Tool Design Requirements, for specific requirements for the tools to be used to actuate the tool-actuated fasteners.)

(Refer to Paragraph 14.6.3.3, EVA Fastener Design Requirements, for EVA fastener requirements.)

a. Nonstandard Tools - Fasteners requiring nonstandard tools shall not be used.

b. High-Torque Fasteners (IVA Only) - External hex or external double-hex fastener heads are preferred and they shall be provided on all machine screws, bolts, or other fasteners requiring more than 14 Nm (10 ft-lbs) of torque. Internal wrenching fasteners shall be Allen-head-type fasteners.

c. Low-Torque Fasteners :

1. Hex-type internal grip head, hex-type external grip head, or combination-head (hex or straight-slot internal grip and hex-type external grip head) fasteners shall be used where less than 14 Nm (10 ft-lb) of torque is required.

2. Internal-grip head fasteners shall be provided only where a straight or convex smooth surface is required.

3. No straight-slot or Phillips-type internal grip fasteners shall be used.

d. Precision Torquing - When possible, design equipment so that precise torque on fasteners is not required. Where precise torque or preload is required, use fasteners that incorporate torque-indicating features or that will mate with appropriate on-board torquing tools.

e. Torque Labeling - When fastener torquing to specifications is required, an instructional label shall be provided in reasonable proximity to the fasteners.

(Refer to Paragraph 9.5, Labeling and Coding, for specific requirements.)

f. Number of Turns - When machine screws or bolts are required, the number of turns and the amount of torque shall be no more than necessary to provide the required strength.

g. Fastener Head Length (IVA Only) - Fastener heads shall be as short as possible so they will not snag personnel clothing or equipment.

h. Left-Hand Threads - Left-hand threads shall not be used unless system requirements demand them; then identify both the bolts and nuts clearly by use of markings, shape, color, etc.

i. Locking - Threaded fasteners shall incorporate features that allow them to be locked so that they will not unthread without using a tool.

j. Hand Tool Operable - All fasteners installed with power tools shall be removable with a hand-operated tool.

11.9.3.4 IVA Fastener Design Requirements

{A}

In addition to the fastener design requirements given in Paragraphs 11.9.3.1 through 11.9.3.3, all IVA fasteners shall meet the following requirements:

(Refer to Paragraph 14.6.3.3, EVA Fastener Design Requirements, for EVA-unique requirements.)

a. Fastener Lubrication - IVA fasteners that require lubrication shall use an approved lubricant or plating material.

b. Cadmium Plating - Cadmium-plated IVA fasteners shall not be used.

c. Wing-Head Fasteners - Wing-head IVA fasteners shall fold down and be retained flush with surfaces so they will not snag personnel, clothing, or equipment.

d. Cotter Keys :

1. Fit - Keys and pins shall fit snugly without requiring being driven in or out using a tool.

2. Large heads - Cotter keys shall have large heads for easy removal by hand.

3. Cotter keys shall not be used EVA.

e. Access - Minimal requirements for access and/or clearance areas for tool-actuated fasteners shall be as shown in Figures 11.2.3.6-1 and -2.

(Refer to Paragraph 11.2.3.6, Tool Access Design Requirements, for specific access requirements.)

f. Tool-Actuated Fastener Head Types - In addition to the general tool-actuated fastener design requirements given in Paragraph 11.9.3.3, the following IVA-specific tool- actuated fastener selection requirements shall apply: (NOTE: Special mission or program requirements may create the need to use other types of fastener heads than those listed below.)

1. Fastener heads directly exposed to crew impact shall meet the requirements for burrs, edges, and sharp corners, or shall be provided with protective covers or they shall be flush with surface.

(Refer to Paragraph 6.3.3, Mechanical Hazards Design Requirements.)

2. Fastener heads not directly exposed to crew impact within habitability and stowage areas shall be internal or external hex head.

g. Anti-Sieze and Locking Compounds - Anti-Sieze and locking compounds shall not be used on fasteners.

11.9.4 Example Fastener Design Solutions

{O}

Refer to Reference 155, Section 3.2.2.2, for descriptions and evaluations of the hand-operated fasteners used on the Skylab Program.

11.10 CONNECTORS

{A}

11.10.1 Introduction

{A}

Electrical, fluid, gas, structural, and optical connectors are discussed in this section. Included are requirements for connector selection, identification, alignment, spacing, accessibility, and protection of equipment.

(Requirements for EVA connectors are detailed in Paragraph 14.6.3.)

(See Paragraph 11.14, Cable Management, for electrical cable information.)

(Refer to Paragraph 9.5, Labeling and Coding, for additional connector coding and identification requirements.)

11.10.2 Connector Design Considerations

{A}

Connectors are essential to the assembly and disassembly of equipment, both during the construction and checkout phase and later during maintenance. Unfortunately, connectors are not totally reliable and most are susceptible to damage. Hence, connectors should be used only where needed. Connectors should be selected, designed, and

mounted for:

a. Fast and easy maintenance operations.

b. Easy removal and replacement of components and units.

c. Minimal time to setup, test, and service equipment.

d. Minimum danger to personnel and equipment during mating or demating of connectors due to content spills, electrical shocks, or damage from the release of stored mechanical energy.

e. One-hand operation where possible.

It should be noted that single rows of electrical connectors normally provide best access. Multiple rows of connectors are not desirable, but if required, the connectors should be staggered.

(Refer to Figure 11.10.3.6-2 Preferred Spacing of Staggered Rows of Connectors.)

11.10.3 Connector Design Requirements

{A}

All types of IVA and EVA connectors shall meet the following general requirements:

a. One-Handed Operation - All connectors, whether operated by hand or tool, shall be designed so they can be mated/demated using one hand. For connector design torque values refer to section 11.9.

b. Accessibility - It shall be possible to mate/demate or replace individual connectors without having to remove or replace other connectors.

(Refer to Paragraph 14.6.4.3, EVA Connectors Design Requirements, for EVA-unique connector design requirements.

11.10.3.1 Fluid Connectors Design Requirements

{A}

All IVA and EVA liquid and gas connectors shall be designed to meet the following requirements:

a. Fluid Line Connectors - All brazed or welded gas and liquid lies shall be provided with convenient-to-use, permanently installed connectors that permit on-orbit maintenance.

(Refer to Paragraph 12.3.1.4, Removal, Replacement and Modularity Design Requirements, for fluid and gas line isolation valve requirements.)

b. Indication of Pressure Flow - All liquid and gas lines shall be provided with a positive indication of the gas pressure/fluid flow to verify that the line is passive before disconnection of connectors. Quick Disconnects (QDs) that are designed to be operated under pressure will not require pressure/flow indications.

c. Fluid Loss- Liquid and gas connectors shall be designed to minimize escape or loss of fluids, particularly any toxic materials, during connect or disconnect operations.

11.10.3.2 Electrical Connectors Design Requirements

{A}

All IVA and EVA electrical connectors shall comply with the following general requirements in addition to the requirements in 6.4.3.3.

(Refer to Paragraph 14.6.4.3, EVA Connectors Design Requirements, for additional EVA-unique electrical connectors requirements.)

a. Ease of Disconnect - Electrical connector plugs shall require no more than one turn to disconnect or some other quick disconnect design shall be provided.

b. Self-Locking - Electrical connector plugs shall provide a self-locking safety catch.

c. Access - Electrical connectors and cable installations shall be designed with sufficient flexibility, length, and protection to permit disconnection and reconnection without damage to wiring or connectors.

(Refer to Paragraph 11.14.3, Cable Management Design Requirements, for other related requirements.)

d. Arc Containment - electrical connector plugs shall be designed to confine/isolate the mate/demate electrical arcs or sparks.

(Refer to Paragraph 6.4.3, Electrical Hazards Design Requirements, for specific electrical safety requirements.)

e. Contact Orientation - All efforts shall be made to arrange contacts within connectors such that when the connectors are demated there will be no voltage potential on exposed male pins. Refer to Paragraph 6.4.3.7.

f. Contact Protection - All demated connectors shall be protected against physical damage and contamination.

11.10.3.3 Structural Connectors Design Requirements

{A}

All IVA and EVA structural connectors shall meet the following requirements:

a. Alignment Provisions - All structural connectors shall incorporate alignment features.

(Refer to Paragraph 11.10.3.5, Connector Identification/Alignment Design Requirements, for specific requirements.)

b. Soft Latching - All structural connectors shall provide the capability to "soft-latch" prior to full firm connection or full release.

c. Lock Indication - All structural connectors will provide an indication of positive locking.

11.10.3.4 Optical Connectors Design Requirements

{A}

All fiber optic connectors shall be designed so that proper geometric alignment and abutent maintains signal fidelity.

(Refer to paragraph 11.10.3.5, Connector Identification/Alignment Design Requirements, for specific requirements.)

11.10.3.5 Connector Identification/Alignment Design Requirements

{A}

Connectors shall be selected, designed, and installed so they cannot be mismated or cross-connected. The following requirements are applicable:

a. Connector Shape - Use connectors that are clearly different and physically incompatible when lines differ in content (i.e., different voltages, liquids, gases).

b. Alignment Provisions:

1. Mating connectors shall be provided with aligning pins or equivalent devices to aid in alignment and to preclude inserting in other than desired orientation.

2. If aligning pins are used on electrical connectors, they shall extend beyond the plug's electrical pins to ensure that alignment is obtained before the electrical pins engage.

c. Keying:

1. Symmetrical arrangement of aligning pins or keys shall be avoided to prevent connectors from being mismated.

(See Figure 11.10.4-2, Electrical Connector Keys and Keyways, and Figure 11.10.4-3, Arrangement of Guide Pins.)

2. The mechanical keys shall prevent incorrect connections with other accessible connectors, plugs, or receptacles.

d. Alignment Marks:

1. Alignment marks shall be applied to mating parts if the proper interface orientation is not obvious by virtue of geometry.

2. The marks shall consist of a straight line of a width and length appropriate to the size of the items and shall be located so as to be easily seen by the crewmember both before and after mating/demating operations.

e. Coding:

1. Both halves of mating connectors shall display a code or identifier unique to that connection.

2. Labels or codes on connectors and associated items shall be located so they are visible when connected or disconnected.

(Refer to Paragraph 9.5.3, Labeling and Coding Design Requirements, for specific requirements.)

f. Pin Identification-Each pin shall be clearly identified in each electrical plug and each electrical receptacle.

g. Orientation-Grouped plugs and receptacles shall be oriented so that the aligning pins or equivalent devices are in the same relative position (i.e., all keyed connectors oriented the same direction-key up).

h. Loose Hoses or Cables:

1. If the connectors on the ends of a loose electrical cable or fluid hose are not identical, each end shall be uniquely identified to prevent improper usage.

2. The loose ends of hoses and cables shall be restrained to prevent them from floating out of reach and to avoid injury to crewmembers and damage to equipment.

11.10.3.6 Connector Arrangement Design Requirements

{A}

All types of IVA and EVA connectors shall comply with the following arrangement and spacing requirements:

(Refer to Paragraph 14.6.4.3, EVA Connectors Design Requirements, for EVA-specific connector arrangement and spacing requirements.)

a. Hand Access-Connectors shall be spaced far enough apart so that they can be grasped firmly for connecting and disconnecting

b. Adjacent Connectors or Obstructions-Space between a connector and any adjacent obstruction shall be compatible with the size and shape of the plugs.

c. Single Rows-Connectors in a single row which require removal and replacement by the crew (IVA) shall be a minimum of 25 mm (1 in.) apart (edge-to-edge) for hand access during alignment and insertion. A separation of 41 mm (1.6 in.) is required for EVA and preferred for IVA. (See Figure 11.10.3.6-1.)

d. Staggered Rows-Staggered rows of connectors shall be a minimum of 64 mm (2.5 in.) apart-IVA and EVA, (see Figure 11.10.3.6-2).

e. Tools-If a tool is used, the hand access clearance is still required to facilitate initial alignment by hand.

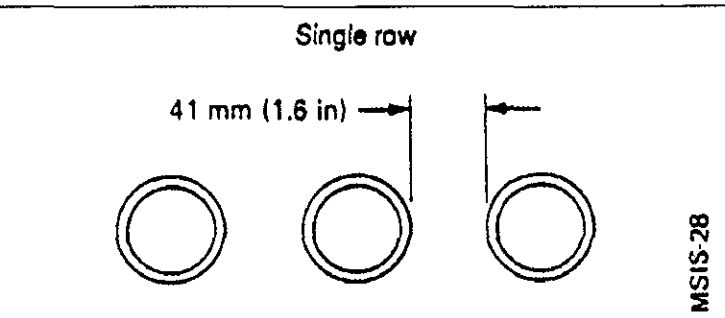

Reference: 1, Figure 3.6-5, page 3.6-5

Figure 11.10.3.6-1. Preferred Spacing of Single Row of Connectors

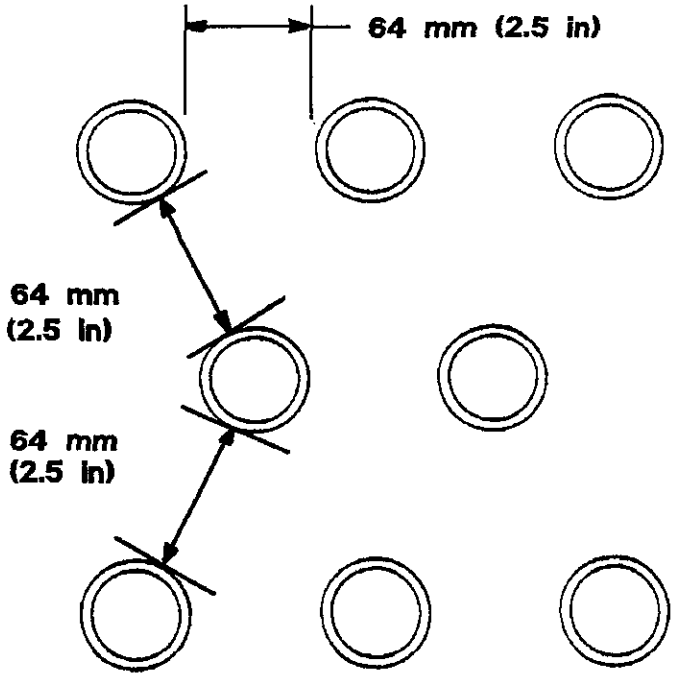

Reference: 1, Figure 3.6-6, page 3.6-5

Figure 11.10.3.6-2 Preferred Spacing of Staggered Rows of Connectors

MSIS29
Rev. B

11.10.4 Example Connector Design Solutions

{A}

The following examples show methods that should be considered to identify, code, align, and mark electrical connectors and receptacles.

a. Coding-Methods of coding connectors and mating plugs or receptacles are shown in Figure 11.10.4-1. Discrete nomenclature of alphanumeric coding is preferred to color coding.

b. Locating Labels-Alphanumeric coding of electrical connections plugs and receptacles (Figure 11.10.4-1) are located so they are visible when connected or disconnected.

c. Keys and Keyways - Correct and incorrect methods of providing keys and keyways on electrical connectors are shown in Figure 11.10.4-2.

d. Alignment Pins-Correct and incorrect methods of providing alignment pins on electrical connectors are shown in Figure 11.10.4-3.

e. Alignment Marks-Alignment marks on electrical connector plugs and interfacing receptacles are shown in Figure 11.10.4-4. They are so located as to provide the crewmember with line-of-sight access during insertion.

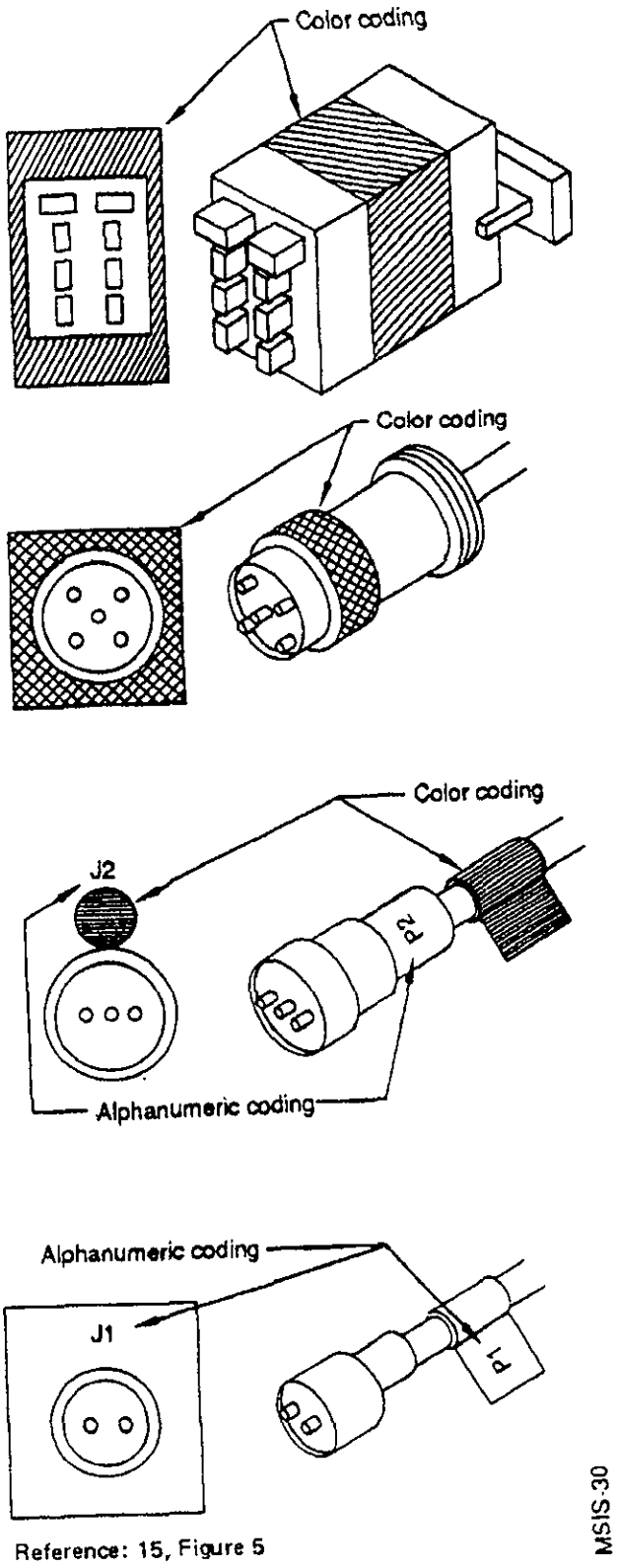

Reference: 15, Figure 5

Figure 11.10.4-1. Coding of Mating Connectors

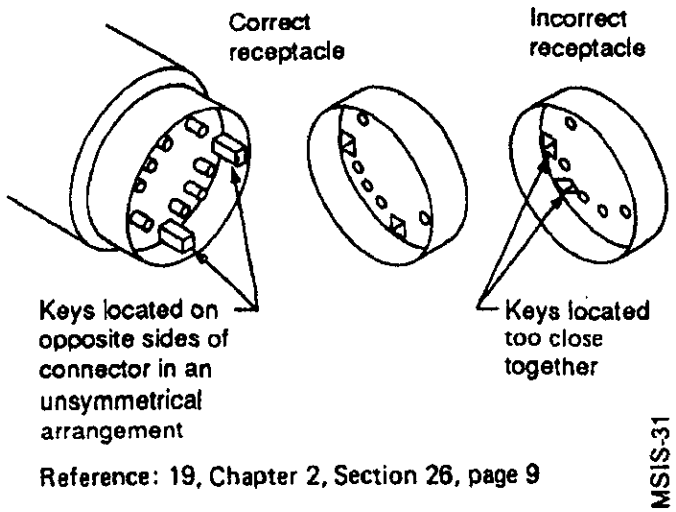

Figure 11.10.4-2. Electrical Connector Keys and Keyways

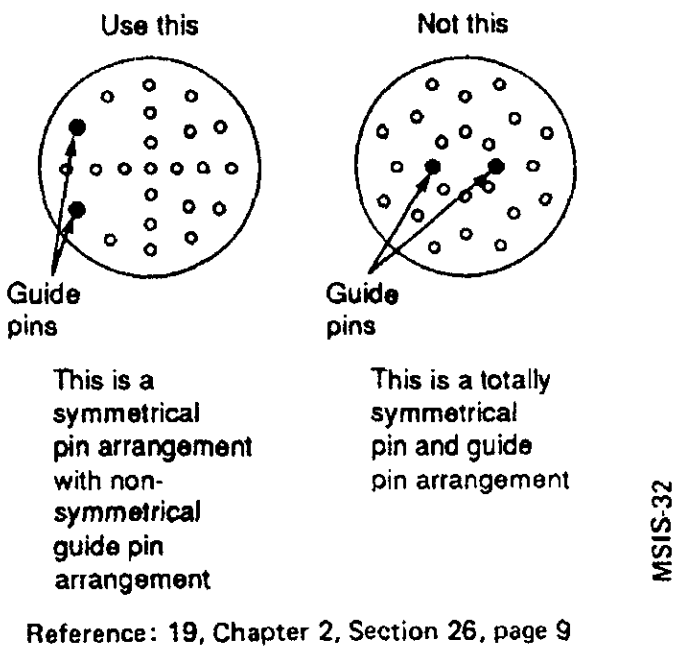

Figure 11.10.4-3. Arrangement of Guide Pins

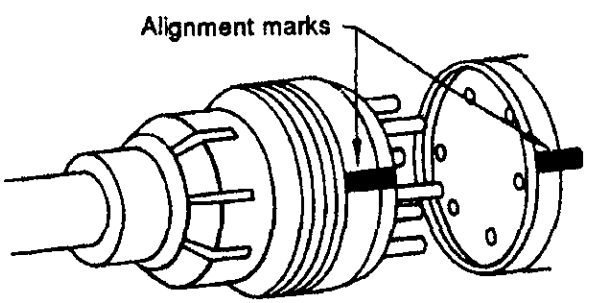

Figure 33 Alignment Marks

11.11 Windows

{A}

11.11.1 Introduction

{A}

This section provides design considerations, requirements, and examples for window optical characteristics, visual protection for the window users, physical protection of the window interior and exterior surfaces, and window maintenance.

(Refer to Paragraph 8.11, Window Integration, for design considerations and requirements pertaining to window location with respect to the overall architecture of the space module.)

(Refer to Paragraph 9.2.5.1, Window Workstation, for design requirements pertaining to integration of windows with controls, displays, and other man/machine interfaces.)

11.11.2 Window Design Considerations

{A}

The following window design considerations represent selected background information that should be considered in window design. See Reference 178 for more comprehensive treatment of these considerations.

11.11.2.1 Optical Characteristics Design Considerations

{A}

Window transmissivity is a critical design parameter because some visual tasks require perception of very small, faint sources of light. Visual perception decreases with decreased window transmissivity. The window transmissivity must be constant across its entire surface to prevent distortion of viewed objects. The glass must be free of inclusions (e.g., air bubbles, foreign particles). These glass imperfections can 1) cause the viewer to focus improperly on objects and 2) cause glare which can also degrade visual perception.

The line of sight (LOS) of the viewer looking through a window system of multiple glass surfaces, may be altered by a variety of factors; nonparallel multiple glass surfaces create a prism effect causing line of sight deviation wherein the visual judgement of target motion normal to the LOS may be in error. Each surface of a window panel must be flat and parallel so that it does not contain an astigmatic error in which the observer perceives out-of-focus images. Since the eye can not focus at two distances at the same time, it well likely seek and intermediate focus. This results in blurring or distortion which causes visual fatigue. Reflections produced by internal or external light sources can interfere with visual identification and other judgements of luminous targets and cause eye fatigue. Antireflection coatings, polarizing filters, or glare screens can help reduce these reflections.

In general, even though the optical qualities of windows should be dictated by the various uses to which they will be put, it is reasonable to design into them as high optical quality as is affordable in anticipation of future experimental and other mission requirements.

11.11.2.2 Visual Protection Design Considerations

{A}

Internal and external shutters or shades have been employed on previous manned space vehicles to protect the crewmember from the high intensity sunlight, to reduce glare, and to reduce ambient lighting where low light levels were needed for operational tasks or for sleep periods. The external shutters also act as protection from micrometeorites and other potential external sources of damage or contamination, thus preserving the life and quality of the window.

Filters and coatings are used to protect the observer's eyes and exposed skin surfaces from harmful infrared or ultraviolet radiation. Filters may be required to protect the eyes from laser light. Applicable laser light safety criteria should be adhered to so that inadver-

tent admittance of laser light through the windows is prohibited.

(Refer to Paragraph 5.7.3.1.4, Non-Ionizing Radiation Protection Design Considerations, and Paragraph 5.7.3.2.1, Non-Ionizing Radiation Exposure Limits, for specific laser safety considerations and requirements.

11.11.2.3 Physical Protection Design Considerations

{A}

There are many sources of natural and manmade external window surface contaminants. Natural sources of contamination include micrometeoroids, cosmic particles, and electrons. Manmade sources of contamination include propellants, ECLSS outgassing, sealant outgassing, fluid leaks, waste dumping, atmosphere leakage, and EVA glove and boot prints.

Between-pane contamination may result from outgassing of gaskets or from moisture that is not removed during the window assembly process. Provision for early detection and removal of moisture from spaces between multiple window panes should be provided, particularly for long-duration missions.

Window surface contamination sources inside the space module include breath condensation, finger prints, body oils, urine, skin, and bacteria. These window surface contaminants scatter sunlight into the observer's eyes and produce glare that reduces the crewmembers ability to detect faint visual targets. The space module design should prevent or minimize these sources of contamination whenever technically and economically feasible. Anti-fogging coatings, heated glass, sacrificial (i.e. removable) surfaces, and protective covers are some of the ways that contamination can be prevented.

Window flaws and cracks can grow imperceptibly until they reach a catastrophic magnitude. A means should be provided for performing continuous window integrity inspections.

11.11.2.4 Window Maintenance Design Considerations

{A}

Due to the external and internal contaminants and accidental mechanical damage, contingency window maintenance must be provided.

Window surface cleaning materials and processes must be designed to preserve the optical qualities of the window by not scratching or staining the surfaces. Polishing/buffing operations are not recommended since they are likely to do more damage than good.

Removable, transparent window covers (i.e., sacrificial surfaces) should be considered as a means to expedite the window maintenance. These disposable covers would be designed to absorb most of the mechanical damage or staining that cannot otherwise be avoided.

The possibility of replacing one or more window panes on-orbit should be considered for permanently orbiting space modules. Techniques for accomplishing this replacement operation should not entail depressurization of the module.

11.11.3 Window Design Requirements

{A}

This section provides the design requirements for the optical characteristics, visual protection for the window user, physical protection of the window panes and window maintenance.

The following optical characteristics requirements shall apply to window and viewport design in order that no visible distortions or optical defects shall be detectable by a person possessing 20/20 acuity within the normal viewing envelope under operational lighting conditions.

(Refer to Paragraph 8.11.3, Window Integration Design Requirements, for window architectural requirements.)

(Refer to Paragraph 9.2.5.1.2, Window Workstation Design Requirements, for additional requirements when the window will be used in conjunction with controls, displays, restraints, etc.)

11.11.3.1 General Viewing Window Requirements

{A}

11.11.3.1.1 Window Size

{A}

a. Hatch windows shall be minimum of 20.3 cm (8 in.) diameter.

b. General area windows shall be a minimum of 50.8 cm (20 in.) in height and width or diameter.

11.11.3.1.2 Surface Reflections

{A}

a. Windows shall be designed such that specular reflectance from each air-glass interface shall not exceed 1.5 percent for light incident on the surface.

b. When anti-reflection coating are applied to windows, they shall not cause resolution degradation exceeding .007 mr (1.5 arc seconds).

11.11.3.1.3 Optical Characteristics

{A}

At completion of manufacture, the window panes, with all accepted coatings shall meet the following optical requirements within the clear viewing area.

a. Deviation at any point on the window panes shall not exceed 1.45 mr (5 arc minutes). Tempered window panes shall not exceed 2.9 mr (10 arc minutes).

b. Distortion of all types of window materials shall not exceed a plane slope of 1:24.

c. Haze of the uncoated window pane for all thicknesses shall not be greater than 2%

d. Warp and Bow-All glass window panes shall not exhibit warp or bow greater than 0.030 inch per linear foot of the glass.

e. Surface Parallelism-The surface parallelism between multipanes of window systems shall not exceed 0.58 mr (2 arc minutes) from inner surface to outer surface of the complete assembly.

11.11.3.1.4 Optical Density

{A}

Each pane shall be manufactured so that when multipanes for window group the following shall be met.

a. Infrared-The optical density shall be greater than one for wavelengths between 850 and 1000 nanometers (less than 10%). For wavelengths greater than 1000 nanometers, the transmittance shall be less than 8%.

b. Ultraviolet-The optical density shall be greater than three for wavelengths between 320 and 280 nanometers. The optical density shall be greater than four for wavelengths between 220 and 280 nanometers.

c. Visible-In the region between 420 and 800 nanometers, the transmittance through a window composite shall not be less than 70%. The transmissivity shall not vary more than 25% for incident angles between the window surface and LOS's ranging from 30 to 60 degrees.

11.11.3.1.5 Surface Quality

{A}

The surface of each window pane shall be such that digs shall not exceed 0.122 cm (0.050 inches) diameter and scratches shall not exceed 0.0015 cm (0.0006 inch.) deep. Chips shall not exceed 0.078 cm (0.032 inch.) in surface penetration and 0.04 cm (0.016 inch.) in thickness.

11.11.3.1.6 Bubbles, Seeds

{A}

The maximum number of open seeds per surface shall not exceed three and shall not exceed 0.1225 cm (0.050 inch) in diameter or exceed a total number of 5 per cubic inch.

b. Striae-Striae shall not exceed a diameter of 0.2 cm (0.080 inch) and are limited to no more than 2 square inch.

c. Inclusions-Inclusions shall not exceed 0.37 cm (0.15 inch) in diameter and more than 1 per cubic inch.

11.11.3.1.7 Visual Protection Design Requirements

{A}

The window design shall meet the following requirements:

a. Sun Shields/Shades

1. Sun Shields - All viewing windows shall be provided with crew-operated, opaque sun shields which are capable of restricting all sunlight from entering the habitable compartments.

2. External Sun Shades - If external shades are provided there shall be a means to reposition by the window user.

b. Heat Rejection - The sun shade, whether internal or external, shall be capable of rejecting radiant energy away form the window assembly.

Window design shall be coordinated with other shielding protection design to achieve less than or equal to allowable radiation dosages given in these paragraphs.

c. Visual Protection - Visual Protection Requirements are met by the requirements in sub-paragraphs a. and b. of Paragraph 11.11.3.1.4 Optical Density.

11.11.3.1.8 Physical Protection Design Requirements

{A}

Window design shall meet the following surface contamination and breakage requirements which are imposed to ensure that the windows can be used for the intended observation functions and that the module pressure integrity is maintained:

a. External Surface Contamination Protection - Window design shall take into account all sources of external contamination and shall provide a means for cleaning or replacing when degradation exceeds optical transmissivity requirements.

b. Between-Pane Contamination Protection - Window design shall take into account all sources of contamination that can occur between the transparency panes and shall provide a means of preventing optical degradation due to these contaminants.

c. Internal Surface Contamination Protection - Window design shall take into account all sources of internal surface contamination and provide a means for preventing or minimizing optical degradation due to these contaminants.

1. Anti-fogging - All innermost panes shall be designed for anti-fog protection.

2. Inner Pane Coatings - The innermost pane shall have no coatings except for anti-reflective coatings.

d. Impact Load Protection - The window assembly shall be capable of withstanding a blunt object impact load of 550 N (125 lb) from any angle of incidence.

e. Protection Covers - Removable or extractable protection covers shall be provided where the window assembly does not meet crew and equipment impact load criteria or the launch and reentry pressure profiles.

f. Retractable External Protective Covers - If external protective covers are opaque, then IVA controls shall be provided with a backup EVA capability to override the IVA system.

11.11.3.1.9 Window Maintenance Design Requirements

{A}

The following window maintenance requirements are imposed to minimize the crew workload and prevent degradation of the optical qualities of the windows:

a. Window Servicing - Equipment and supplies shall be provided for efficient contingency window cleaning.

b. Protective Covers - Where surface scratching, pitting, or staining cannot be prevented by other means, removable window protective surfaces shall be provided.

c. Window Replacement - Window assemblies shall be designed to eliminate the need for depressurizing modules in order to replace window panes or the entire window assembly.

11.11.3.2 Scientific Window Design Requirements

{A}

This section defines the requirements for a scientific window for special photographic and scientific investigation.

a. Aperture Diameter-The window shall be a single pane or multi pane system with a minimum aperture diameter of 55.9 cm (22 inches).

b. View - The window shall be located to provide unobstructed viewing.

11.11.3.2.1 Window Glass Requirements

{A}

These specifications apply to scientific viewing windows, for the pressure pane, the backup pane and the meteoroid debris protective pane. The inside protective pane(s) shall be removable for viewing where they do not meet the optical requirements and are not required for scientific investigations (See Paragraphs 11.11.3.2.3 and 11.11.3.2.4).

11.11.3.2.1.1 Materials Requirements

{A}

a. Window Pane Material - the window panes (glass) shall be fabricated from optical quality fused silica or equivalent.

b. Inclusions - The silica (glass) shall meet Inclusion Number (Class) 0 as defined in MIL-STD-174B; i.e., seeds and bubbles, to the extent that the total bubble and seed cross section per 100 cubic cm (6.1 in^3) volume as viewed normal to the surface shall be less than 0.03 mm^2 (0.00005 in^2).

c. Homogeneity - The index of refraction as measured normal to its surface of the glazing shall not show a variation greater than 3×10^{-6} over the entire sensing unit viewing area.

d. Birefringence - Birefringence shall be kept to less than 6 nm/cm over the entire sensing unit viewing area.

e. Veiling Glare - The complete single window glazing shall not contribute more than 2% veiling glare to the sensing systems.

11.11.3.2.2 Optical Requirements

{A}

a. Wavefront Error - The RMS wavefront variation through each multipane window system shall not exceed 1/10 of a light wavelength of 632.8 nm (helium neon) over any 16.5 cm (6.5 in) diameter aperture within the clear viewing area, obtained after all necessary optical coatings have been applied. This specification shall apply when viewing through the window from normal through 30 degrees off normal to the viewing surface in any axis.

b. Surface Finish - The surface finish shall be polished to meet or exceed the requirements of a scratch-dig standard of 60-40 as described in MIL_0-13830A. The surface roughness shall be no greater than 10 angstroms remote manipulating system before coating. The roughness shall be measured across two perpendicular diameters.

c. Wedge - Deviation of the transmitted beam shall not exceed 3.5 arc-seconds in any direction through a single pane.

d. Parallelism Between Panes - Adjacent panes of a multipane window shall be parallel between 0.1 degree to 3 degrees. The innermost and outermost panes of a window system shall not be more than 3 degrees form parallel; this requirement shall not be met by matching tilted panes.

e. Grinding and Polishing Sequence - Each optical surface will be polished using a control grind schedule wherein the material is removed to a depth equal to 3 times the diameter of the previous grit size through the polish operation. See Figure 11.11.3.2.1.2-1 for example sequence.

f. Edges and Chamfers - All edges and chamfers shall be polished to relieve stresses caused by grinding. As these are not optical surfaces, a minimum of "orange peel" is permissible and may be felt-polished. However no chips shall be allowed.

g. Residual Stress - The manufacturing process shall be such that when polished, the window pane shall contain no residual stresses of flaws introduced during processing.

11.11.3.2.3 Transmittance

{A}

Each pane shall be manufactured so that when multipanes form a window system, the following transmittance shall be met. Transmittance through the window system at incidence angles from 0 degrees to 30 degrees shall be as follows:

a. 1200 to 300 nm:50% minimum.

b. 300 to 400 nm:60% minimum.

c. 400 to 450 nm:70% minimum.

d. 450 to 700 nm:85% minimum.

e. 700 to 900 nm:60% minimum.

f. 900 to 1200nm:40% minimum.

11.11.3.2.4 Reflectance

{A}

The reflectance of the window shall be less than 2 percent from a wavelength of 450 nanometers to 900 nanometers. If an electro-conductive coating is used, the reflectance shall be less than 2% for wavelengths of 400 nanometers to 700 nanometers and less than 4% for wavelengths of 700 nanometers to 900 nanometers. These requirements shall apply for incidence angles from 0 degrees to and including 15 degrees from normal.

11.11.3.3 Visual Protection Design Requirements

{A}

The window design shall meet the following requirements:

a. Sun Shields/Shades:

1. Sun shields-All viewing windows shall be provided with crew-operated, opaque sun shields capable of restricting all sunlight from entering habitable compartments.

2. External sun shades repositioning-If external shades are designed to cast a shadow over a window, they shall be provided with a means to be remotely repositioned by the window user.

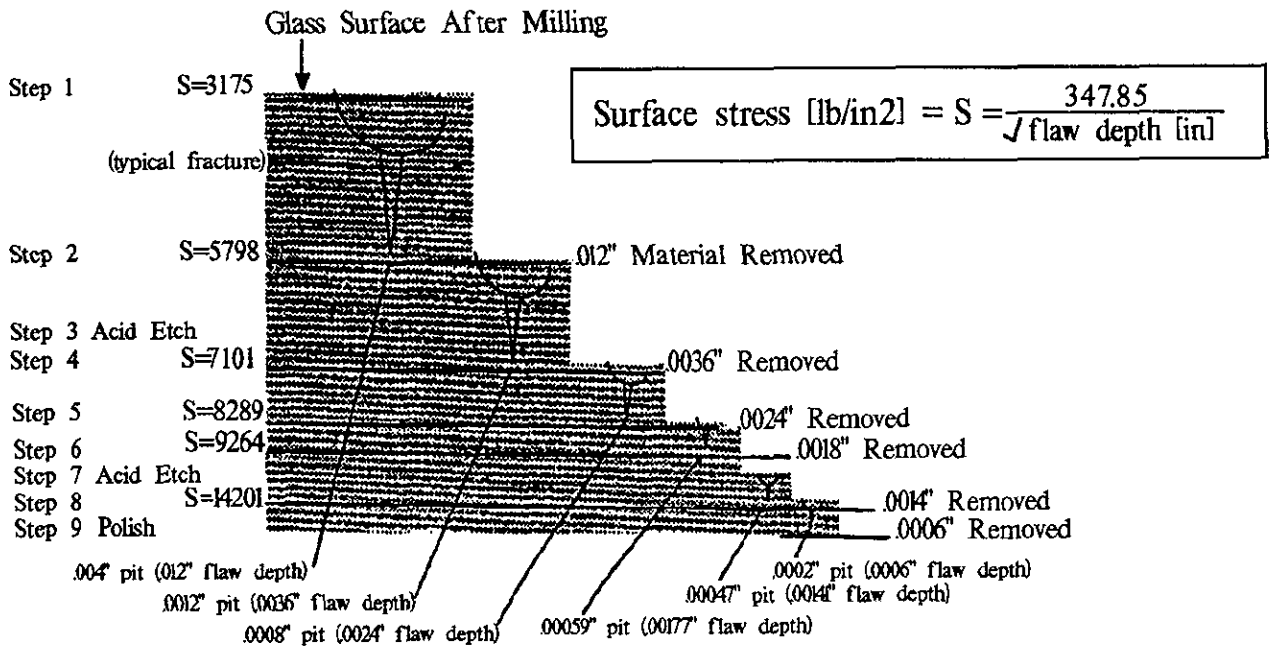

Step	Operation	Abrasive	Average Particle (inches)	Material Removal (Specified in.)	Surface Strength PSI
1	Milling	150 Grit Diamond	.004		3175
2	Coarse Grind	Aluminum Oxide	.0012	.012 min	5798
3	Acid Etch				
4	Fine Grind	Aluminum Oxide	.0008	.0036 min	7101
5	Fine Grind	Aluminum Oxide	.00059	.0024 min	8268
6	Fine Grind	Aluminum Oxide	.00047	.0018 min	9264
7	Acid Etch				
8	Fine Grind	Aluminum Oxide	.0002	.0014 min	14201
9	Polish	Cerium Oxide	.000055	.0006 min	
10	see below *	Aluminum Oxide	.00047		

* Required for clean-up of the polish particles left on the acid etched edge surfaces. Material removed should be minimum necessary for clean-up.

MSIS450 Rev. B

Figure 11.11.3.2.1.2-1 Controlled Grinding Sequence

b. Radiation Protection:

1. Infrared-The maximum transmissivity of infrared shall be no more than 10% (density = 1) in the range of 800 to 1200 nm.

2. Ultraviolet-The maximum transmissivity of ultraviolet shall be no more than 0.001% (density = 10E-5) in the range of 200 to 300 nm.

3. Heat rejection sun shade, whether internal or external, shall be capable of rejecting radiant energy away from the window assembly.

(Refer to paragraph 5.7.2.2, Ionizing Radiation Design Requirements, for specific ionizing radiation exposure limits.)

(Refer to Paragraph 5.7.3.2, Nonionizing Radiation Design Requirements.)

4. Window design shall be coordinated with other shielding protection design to achieve less than, or equal to, the allowable radiation dosages given in these paragraphs.

c. Optical Filters-Optical filters shall be provided to meet visual protection requirements if operational functions require light transmissivity in excess of the requirements given in item b, above.

11.11.3.4 Physical Protection Design Requirements

{A}

Window design shall meet the following surface contamination and breakage requirements which are imposed to ensure that the windows can be used for the intended observation functions and that the module pressure integrity is maintained:

a. Physical Protection Design Requirements - Window design shall meet the following surface contamination and breakage requirements which are imposed to ensure that the windows can be used for the intended function.

b. Surface Contamination Protection - Window design shall take into account all sources of external between pane, and internal contamination and shall provide a means for cleansing or replacing when degradation exceeds optical transmittance requirements. Scientific windows shall have an external cover that shall be closed except when these windows are in use, and shall have an internal transparent removable cover to protect the internal surface form scratches, smudges and protect the crewmembers' eyes form UV and IR transmittance. The removable cover shall be designed such that its removal is evident to all crewmembers within the module.

c. Protective Cover - Removable or retractable protective covers shall be provided where the window assembly does not meet crew and equipment impact load criteria.

d. Retractable External Protective Covers - If external protective covers are opaque, then IVA controls shall be provided with a backup EVA capability to override the IVA system.

e. Impact Load Protection-The window assembly shall be capable of withstanding a blunt object impact load of 550 N (125 lb.) from any angle of incidence.

11.11.3.5 Window Maintenance Design Requirements

{A}

The following window maintenance requirements are imposed to minimize the crew workload and prevent degradation of the optical qualities of the windows:

a. Window Servicing - Equipment and supplies shall be provided for efficient contingency window cleaning.

b. Protective Covers - Where surface scratching, pitting, or staining cannot be prevented by other means, removable window protective surfaces shall be provided.

c. Window Replacement - Window assemblies shall be designed to eliminate the need for depressurizing modules in order to replace window panes or the entire window assembly.

(Refer to Paragraph 12.0, Design for Maintainability, for general and specific maintainability design considerations and requirements.)

11.11.3.6 Window Glass Systems
{A}

11.11.3.6.1 Other Windows
{A}

Windows of a shape other than round shall have a clear viewing aperture that meets the optical specifications of section 11.11.3.2.1.2 over an area as large as is consistent with the shape of the window and the structural mounting requirements. This shall be a circle up to 20 inches in diameter.

11.11.4 Example Window Design Solutions
{A}

Example window designs from previous US, ESA, and Soviet manned spacecraft are given in References 155 (Section 3.2.7.2), 178, and JSC 32003, Space Station Viewport Study.

11.12 Packaging
{A}

11.12.1 Introduction
{A}

This section provides the design considerations, requirements, and examples for the packaging used for IVA and EVA consumables, spare parts, experimental specimens, etc.-anything that requires a protective envelope not directly provided by a stowage system.

Note: This section does not cover the topic of equipment packaging. Refer to Paragraph 11.3, Drawers and Racks; Paragraph 11.4, Closures and Covers; and Paragraph 11.5, Mounting Hardware, for equipment packaging considerations and requirements.

All packaging must be designed in conjunction with the stowage system. Refer to Paragraph 10.12, Stowage Facility, for stowage design considerations and requirements.

Food packaging is covered as a special topic in Paragraph 10.5.3.3, Food Packaging and Stowage Design Requirements, in the section on the galley.

11.12.2 Packaging Design Considerations
{A}

Packaging design must consider the following factors:

a. Physical Environments - The packaging must be effective under various combinations of the following physical environmental conditions:

-Temperature

-Humidity

-Vacuum

-Acceleration

-Vibration

-Ambient atmosphere gases and trace contaminants

-Atmospheric pressure

-Light

-Radiation

-Handling by hand

-Long-term use

b. Physical/Chemical Properties-The packaging must be designed to resist the physical and chemical properties of the contents:

-Consistency

-Fluid, gaseous, or solid state

-pH

-Moisture content

-Microbiological factors

-Fat content

-etc.

In addition, the packaging envelope must be designed to provide the appropriate microenvironment for the contents. For example, if the package is for live specimens, it must provide the necessary life support interface provisions, e.g., ventilation. If the contents need to be delivered in a pressurized form, the package must be designed to meet the interior pressure.

Packaging also protects the environment from the contents. For example, deceased experimental animals must be packaged so that microbiological contaminants are not released into the space module atmosphere. Contents must not leak out of the container and cause surface or atmospheric contaminations.

c. System Engineering Considerations-All packaging designs must take into account system engineering factors such as weight and volume constraints. Packaging should be standardized as much as is feasible. Shelf life from the time of packaging to the time of use must always be considered. The packaging design must be integrated with stowage, transportation, restraints, and processing equipment.

d. Sizing - Package size should be determined by taking into account the rate of usage of the contents, the ease of handling, and the size of the processing equipment with which the package interfaces.

e. Mobility Aid Interfaces-If the size or shape of the package is such that a tether, removable handle, or other type of mobility aid will be used, the package should be designed with suitable attachment interfaces.

f. Contamination-The packaging material should be selected to avoid introducing contamination hazards into the space module environment.

11.12.3 Packaging Design Requirements

{A}

All IVA and EVA packaging shall meet the following design requirements:

a. Compatible With Stowage-All packaging form must conform the stowage space available.

(Refer to Paragraph 10.12.3, Stowage Facility Design Requirements, for specific requirements.)

b. Compatible With Environments-All packaging must be able to resist physical environment exposure to which it will be exposed during ground handling, ground and air transportation and launch, on-orbit and (if returnable) entry operations.

c. Compatible With Contents-All packaging must be able to resist the physical characteristics of its contents for the maximum time duration for which the contents must be packaged.

d. Compatible With Trash Disposal System-All non-reusable packaging must be compatible with the trash collection and disposal system.

(Refer to Paragraph 10.11.3, Trash Management Facility Design Requirements, for specific requirements.)

e. Packaging Restraint-Provide means for physically attaching or restraining the package at all locations where the package may have to be temporarily placed during use.

f. Labeling-All packages shall be clearly labeled as to their contents.

(Refer to Paragraph 9.5.3.1.9, Stowage Container Labeling Design Requirements, for specific labeling requirements.)

g. Inventory Control Compatibility-All packages shall be designed to incorporate the coding features required by the inventory control system.

(Refer to Paragraph 13.3.3, Inventory Control Design Requirements, for specific requirements.)

h. Ease of Use:

1. All packaging shall be designed to be usable without extensive manipulation of the packaging materials.

2. All packaging shall be designed provide efficient and convenient means of opening and where necessary, closing/resealing the package.

i. Sizing-All packages shall be sized to be optimally suited for ease of handling and rate of consumption.

j. Hazards:

1. Packaging that incorporates pull-tabs, lids, and other easy opening features shall be designed such that the crewmember will not be injured during normal use of the feature.

(Refer to Paragraph 6.3.3, Mechanical Design Requirements, for specific safety requirements.)

2. Packaging materials shall not introduce contaminants into the atmosphere.

(Refer to Paragraph 5.1.3, Atmosphere Design Requirements, for specific contamination requirements.)

k. Loose Packaging Materials-Loose, void filling materials shall not be used within a package.

l. Mobility Aids-Provide interfaces on the package for the attachment of equipment mobility aids if necessary for the application.

(Refer to Paragraph 11.8.3, Equipment Mobility Aids Design Requirements, for specific requirements.)

11.13 Crew Personal Equipment
{A}

11.13.1 Clothing
{A}

11.13.1.1 Introduction
{A}

This section provides the design considerations, requirements, and examples for IVA clothing. Outerwear, underwear, gloves, footwear, and headwear for use in normal and hazardous environments are included. Specific data are provided on the selection of types of clothing, materials and fabrics, sizing, and specific design features such as fasteners, pockets, etc.

(Refer to Paragraph 14.3.2.1, Space Suit Design Considerations and Dimensions, for EVA clothing.)

11.13.1.2 Clothing Design Considerations
{A}

11.13.1.2.1 Preliminary Clothing Design Considerations
{A}

The following design considerations apply to clothing system definitions:

a. Mission Considerations:

-mission duration

-number of crewmembers

-atmosphere gases and pressure

-atmosphere and surface temperature

-maximum dew point

-ventilation velocity

-equipment operation, maintenance and repair tasks

-hazardous environmental exposure (i.e. toxic materials, electrical, etc.)

b. Crew Data:

-metabolic rates (work, exercise, sleep)

-crew population microgravity anthropometrics

-wardrobe weight and volume limits

11.13.1.2.2 Disposable vs Reusable Clothing
{A}

The clothing may either be disposable or reusable (i.e., washed in orbit) depending on the crew size and mission duration. A system trade study will be required to determine the relative cost, weight, volume, power, and transportation factors associated with either disposable clothes or reusable clothes that require a laundry system.

(Refer to Reference 139, Paragraph 3.3.1, for detailed description of this trade study.)

11.13.1.2.3 Frequency of Clothing Change
{A}

The various articles of clothing will need to be changed at different intervals depending on the crewmember's personal preference and their hygienic needs. Since the spacecraft environment is very controlled, it is not necessary to provide a complete change of clothes every day. Also, to provide comfort over a wide range of spacecraft temperatures, the clothing options for daily activities should allow the crewmember to select from a variety of garments such as shorts, trousers, short or long sleeve shirts, or a jacket. These clothes should coordinate well together and have a professional appearance. Clothing for sleep should be provided in quantities to meet crew preference needs. The actual quantities of clothing will be a personal preference. The limiting factors will be either weight or volume.

11.13.1.3 Clothing Design Requirements
{A}

11.13.1.3.1 General Clothing Design Requirements
{A}

All IVA clothing shall be designed to meet the following general requirements:

(NOTE: In this paragraph, the word "garments" is used to include outerwear, underwear, footwear, gloves, and headwear.)

a. Suitable for the Environment:

1. Garments shall be provided to protect the user from the full range of anticipated working and off duty environments in the space module.

2. Garments to be used in microgravity or partial gravity shall incorporate features that make the garment suitable for use in these environments.

b. Comfort and Freedom of Movement-Wearing comfort and freedom of movement shall be emphasized in the design of the garments and selection of garments.

c. Wearer Effects-The effects form the wearer's body head generation, skin and hair flaking and loss, and perspiration shall be considered in the design of the garments and selection of materials.

d. Materials and Fabrics-Garment materials shall be selected taking into account the following factors: similarity to Earth garments, flammability, comfort, chemical stability, moisture absorption, water compatibility, tensile strength, abrasion resistance, flexural endurance, wrinkle/shape recovery, cleaning compatibility, electrostatic performance, crease resistance, and freedom from linting.

(Refer to Reference 139, Section 5, for specific design criteria and data for these factors.)

e. Sizing-The range of sizes available shall be sufficient to provide adequate fit and comfort for the crewmember population without resorting to personalized, custom-fitted garments.

(NOTE: Microgravity or spatial gravity anthropometric changes must be accommodated.)

(Refer to Paragraph 3.3, Anthropometrics and Biomechanics Related Design Data, for specific anthropometric requirements.)

f. Exclusive Use-All crewmembers shall be provided with garments for their exclusive use.

g. Unassisted Donning/Doffing-All garments shall be capable of being donned/doffed by a crewmember unassisted in normal and emergency situations and operational environments (Emergency mode donning/doffing should preferably use the normal mode closure and fastener).

h. Off-the-Shelf Garments-Off the shelf, commercially available garments shall be used if possible.

i. Personal Preferences-Provide garment options that allow crewmembers to select various styles, combinations of garments, different colors and different pocket styles and cuffs.

j. Aesthetics-Garment esthetics and overall appearance shall be a very important design factor.

k. Outerwear Hazards-All outerwear garments shall be free of loops, straps, and other obstructions that can snag on equipment.

l. Inner Surface Hazards-An inner surface of garments shall be free of items which can impede free movement, scratch or chafe the wearer.

(Refer to Paragraph 6.3.3, Mechanical Hazards Design Requirements.)

11.13.1.3.2 Clothing Packaging and Storage Design Requirements

{A}

All IVA garments (outerwear, innerwear, footwear, gloves, and headwear) shall be designed to provide the following packaging and storage requirements:

(Refer to Paragraph 11.12, Packaging, and Paragraph 10.12, Stowage Facility, for other requirements.)

a. Identification/Removal from Stowage- Garment package and stowage for delivery to orbit shall be designed to make it easy to identify the type and size of garment and to remove the garment from packaging.

b. Preserve Garment Appearance - Stowage and packaging of clean garments must be designed to preserve the garment appearance.

c. Soiled Garment Storage - Temporary stowage for soiled garments shall be provided.

d. Restowage On-Orbit - Garment stowage shall be designed to provide easy restorage of garments on-orbit.

e. Overnight Stowage - A means for stowing garments overnight without having to fold or package them shall be provided.

11.13.1.4 Example Clothing Design Solutions

{A}

A full description of the STS crew clothing is found in Reference 150, Section 3.13.

11.13.2 Personal Ancillary Equipment

{A}

11.13.2.1 Introduction

{A}

This section provides the design considerations, requirements, and examples for crew ancillary equipment.

11.13.2.2 Personal Ancillary Equipment Design Considerations

{A}

Ancillary equipment includes small, very useful items that the crewmembers typically carry in their pockets.

Penlights and flashlights provide a portable light source for use during both IVA and EVA. It is used for handheld illumination of poorly lighted areas, for illumination of normal operations and maintenance tasks, and as a source of light in the event of cabin light failure.

Pocket knives are reported to be one of the most essential instruments onboard. The US astronauts are provided with a Swiss Army knife.

Standard metal surgical scissors are provided. These are attached to a cord that attaches to the pocket.

Crewmembers are provided with a pair of sunglasses. These are designed to be restrained in the microgravity environment so they do not float off the face.

A multipurpose wrist chronograph is an essential item. This chronograph should incorporate both digital and analog functions. The chronographs are used as wristwatches and stopwatches. They need to be antimagnetic and shock protected. they need to function in both IVA and EVA and be easy to read in daylight or darkness.

Ballpoint pens, marker pens, and pencils are a necessity. They incorporate pocket clips and/or Velcro patches for restraints.

The ancillary equipment to be provided to individual crewmembers will be determined by mission/program needs and requirements and each crewmember's personal preference.

11.13.2.3 Personal Ancillary Equipment Design Requirements

{A}

Where eyeglasses or sunglasses are a crew medical necessity, they shall be made of non-shatterable material.

All eyeglasses and sunglasses shall be equipped with straps or appropriate devices to assure positive retention on the user.

11.13.2.4 Example Personal Ancillary Equipment Design Solutions

{A}

Each shuttle crewmember was provided with the following ancillary crew equipment items:

-Flashlight

-Pocket knife

Chronograph

-Writing Implements

-Sunglasses

-Scissors

(Refer to other paragraphs for stowage, restraint, safety, and other general requirements that these equipment items must meet.)

The Soviets have their knives attached to a long cord to the pocket. They use their knife to prepare food, do repair work, opening packages, cutting string, etc.

(Refer to Reference 150, Section 3.13, for examples of ancillary equipment used by shuttle crewmembers.)

11.14 CABLE MANAGEMENT

{A}

11.14.1 Introduction

{A}

This section provides electrical and fiber optics cable design considerations and requirement for routing, clamping, protecting, and identification.

(Refer to Paragraph 11.10.3.2, Electrical Connector Design Requirements.)

(Refer to Paragraph 11.10.3.4, Optical Connector Design Requirements).

11.14.2 Cable Management Design Considerations

{A}

The primary purpose of interconnecting cables is to transmit power and signals reliably to and from the various parts of the space module. Cable design, routing, and identification methods must be considered to allow the efficient, reliable, and safe accomplishment of on-orbit and planetary maintenance tasks.

Design considerations for satisfactory maintenance should include, as a minimum:

a. Make cables long enough so that:

1. Each unit can be checked in a convenient place.

2. Units in drawers and slideout racks can be pulled out to be worked on without breaking electrical connections.

b. Cables should "fan out" in junction boxes for easy checking, especially if there are no other test points in the circuits.

11.14.3 Cable Management Design Requirements

{A}

The following cable management design requirements shall apply:

a. Routing - Cables shall be routed so that they:

1. Cannot be pinched by doors, lids, or slides.

2. Will not be used as a translation device in a microgravity environment.

3. Will not be bent sharply when connected or disconnected.

4. Are accessible to the crewmember.

5. Do not infringe into the operational envelope nor constitute a safety hazard (i.e., sagging, hooking, etc.).

b. Cable Clamps - Long conductors, bundles, or cables, shall be secured by means of clamps unless they are contained in wiring ducts or cable retractors.

c. Identification - Cables shall be labeled to indicate the equipment to which they belong and the connectors with which they mate. All replaceable wires and cables shall be uniquely identified with distinct number or color codes in accordance with Paragraph 9.5.3, Labeling and Coding Design Requirements.

d. Location of Test, Experiment, or Other Cables - If it is essential that test, experiment, or other cables terminate on control or display panel junction boxes or a crew member, the receptacles and cable routing shall be designed such that the cables will not interfere with controls, displays, or the crewmembers.

e. Coding - Cables containing individually insulated conductors with a common sheath shall be coded.

f. Protection - Guards or other protection shall be provided for easily damaged conductors such as wave guides, high-frequency cables, or insulated high-voltage cables.

g. Retention - The ends of cables which will be disconnected frequently shall have retention provisions.

11.14.4 Example Cable Management Design Solutions

{A}

The following cable management design examples have been used on previous missions and have proven acceptable in assisting the crewmember in identifying cables and wire bundles when maintenance activities are required during the missions:

a. Figure 11.14.4-1 is an example of cable marking and maintenance instruction techniques used on previous missions (note the cable identification location).

b. Figure 11.14.4-2 is an example of markings provided on space cables used on the Orbiter program. Note the cable identification Part Number location and the locations of labels for connector locations.

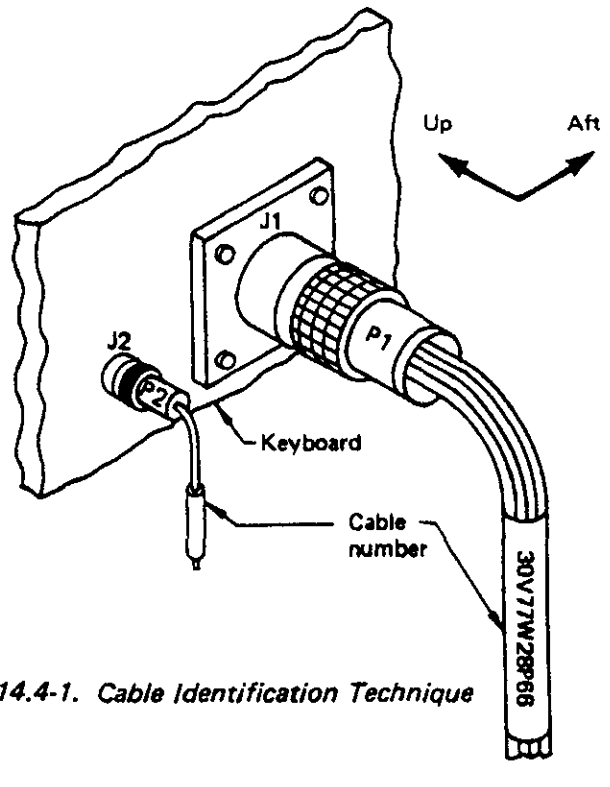

View of keyboard bottom, looking outboard and aft through Panel 14 opening (when panel is removed)

5 Disconnect –
Cable 30V77W28P66 from J1 on keyboard
Cable 30V77W2P67 from J2 on keyboard

Reference: 218, page K-6

Figure 11.14.4-1. Cable Identification Technique

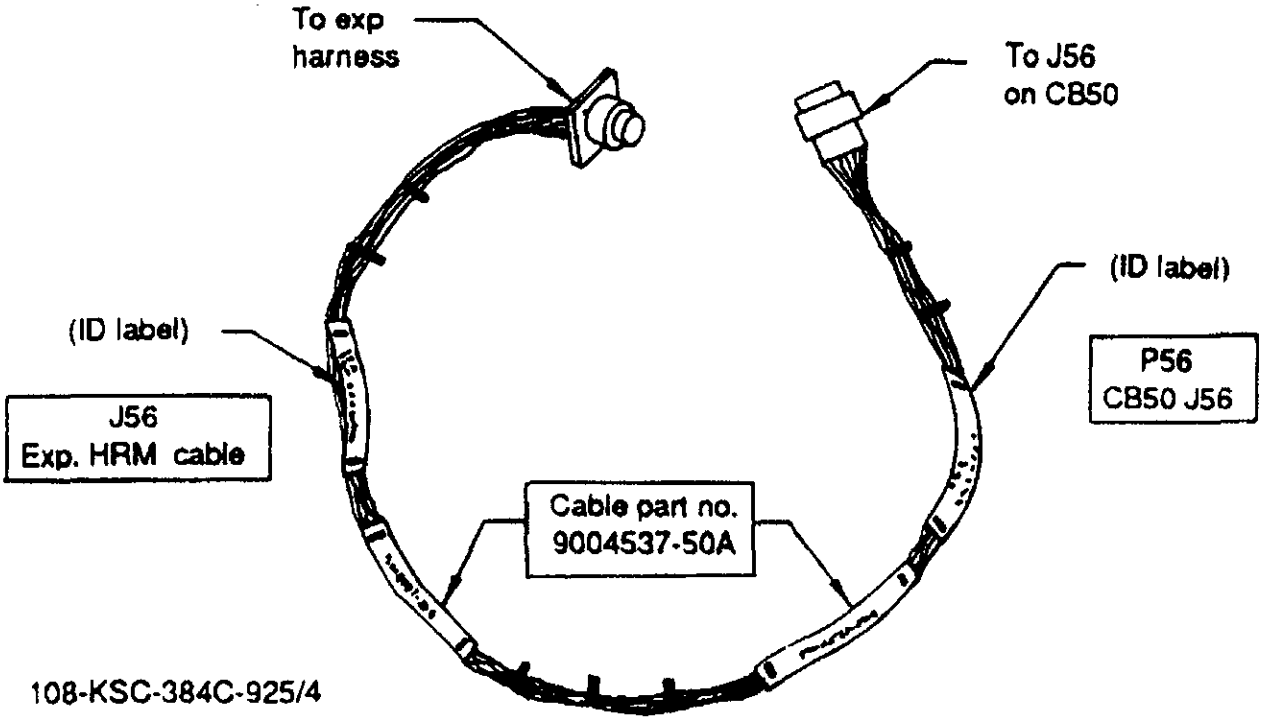

HRM Adapter Cable (to J56)

Reference: 249, page H-43

MSIS-35

Figure 11.14.4-2. Spare or Test Cable Identification Methods

Table of Contents

		Page
12.0	**DESIGN FOR MAINTAINABILITY**	**12-1**
12.1	**INTRODUCTION**	**12-1**
12.2	**DESIGN FOR MAINTAINABILITY DESIGN CONSIDERATIONS**	**12-1**
12.3	**DESIGN FOR MAINTAINABILITY DESIGN REQUIREMENTS**	**12-1**
12.3.1	Equipment Design Requirements	12-1
12.3.1.1	General Maintainabllty Design Requirements	12-2
12.3.1.2	Physical Accessibility Design Requirements	12-3
12.3.1.3	Visual Access Design Requirements	12-5
12.3.1.4	Removal, Replacement and Modularity Design Requirements	12-6
12.3.2	Testability Design Requirements	12-7
12.3.2.1	Fault Detection and Isolation Design Requirements	12-7
12.3.2.2	Test Point Design Requirements	12-8
12.3.3	Maintenance Information Management Systems Design Requirements	12-9

12.0 DESIGN FOR MAINTAINABILITY
{A}

12.1 INTRODUCTION
{A}

This section contains considerations and requirements for designing equipment and systems to facilitate maintenance.

Areas covered in this chapter include general equipment design requirements; physical access; visual access; removal, replacement, and modularity requirements; fault detection and isolation requirements; test point design; and requirements for a maintenance data management system.

12.2 DESIGN FOR MAINTAINABILITY DESIGN CONSIDERATIONS
{A}

Factors that should be considered when designing for maintainability are provided below.

a. Non-Interference of Preventive Maintenance - Preventive maintenance should be minimized and require as little crew time as feasible.

b. Flexible Preventive Maintenance Schedule - Preventive maintenance schedules should be sufficiently flexible to accommodate changes in the schedule of other mission activities.

c. Redundancy - If maintenance is necessary and system operations will be interrupted, redundant installations should be considered in order to permit maintenance without interrupting system operation.

d. Goals of Designing for Maintainability - The following are goals for optimizing crew involvement in both preventive and corrective maintenance.

1. Reduce training requirements of crew.

2. Reduce certain skill requirements of crew.

3. Reduce time spent on preventive and corrective maintenance.

4. Increase maintenance capabilities during mission (especially corrective maintenance).

e. Corrective Maintenance - The following factors should be considered when designing for corrective maintenance tasks.

1. The benefit gained from repair should be worth the time and effort expended on repair.

2. The time and effort involved in corrective maintenance should be weighed against the cost and feasibility of carrying replacement units.

3. Required calibration, alignment, or adjustment should be easily and accurately accomplished.

4. Automate fault detection and isolation tasks whenever possible.

12.3 DESIGN FOR MAINTAINABILITY DESIGN REQUIREMENTS
{A}

12.3.1 Equipment Design Requirements
{A}

All flight hardware and software shall be designed to facilitate on-orbit maintenance, check-out and shall be compatible with ground maintenance capabilities.

Equipment design shall minimize both complexity and time requirements for maintenance.

Equipment design for maintenance shall consider IVA as the prime resource,maintenance by EVA shall be contongency only.

12.3.1.1 General Maintainability Design Requirements

{A}

General requirements to be followed when designing for maintainability are presented below.

a. Growth and Update - Facilities, equipment, and software design shall allow reconfiguration and growth during the mission.

b. Independence - Systems and subsystems shall be as functionally, mechanically, electrically, and electronically independent as practical to facilitate maintenance.

c. Maintenance Support Services - Maintenance support services (e.g., electrical outlets) shall be accessible at potential problem locations or at a designated maintenance location.

d. Reliability - Equipment design shall reduce to a minimum the incidence of preventive and corrective maintenance.

e. Simplicity - Equipment design shall minimize maintenance complexity.

f. Time Requirements - Equipment design shall minimize the time requirements for maintenance.

g. Equipment - Maintenance equipment and tools shall be kept to a minimum.

h. Hazardous Conditions - System design shall preclude the introduction of hazardous conditions during maintenance procedures.

i. Critical Operations - Critical systems shall be capable of undergoing maintenance without the interruption of critical services and shall be maintained.

j. Non-Critical Operations - Non-critical systems shall be designed to operate in degraded modes while awaiting maintenance. Degraded mode operation shall not cause additional damage to the system or aggravate the original fault.

k. Redundancy Loss - Notification of loss of operational redundancy shall be provided immediately to the crew.

l. Connectors - Quick-disconnect connectors shall be used.

(Refer to Paragraph 11.10.3, Connector Design Requirements, for specific requirements.)

m. Plug-In Installation - Plug-in type hardware installation and mounting techniques shall be employed.

(Refer to Paragraph 11.5.3, Mounting Hardware Design Requirements, for specific requirements.)

n. Quick Release Fasteners - Quick release fasteners shall be used where consistent with other requirements (e.g., strength, sealing).

(Refer to Paragraph 11.9.3, Fastener Design Requirements, for specific requirements.)

o. Replacement Capabilities - Capacity of replaceable or reserviceable items (filters, screens, desiccant units, battery power supplies, etc.) shall be higher than the minimum functional requirements of the system.

p. Automation - Fault isolation, inspection, and checkout tasks shall be automated to the extent practical.

q. Restraints - Personnel and equipment mobility aids and restraints shall be provided to support maintenance.

(Refer to Paragraph 11.7.2.3, Personnel Restraints Design Requirements, and Paragraph 11.7.3.3, Equipment Restraints Design Requirements, for specific requirements.)

r. Special Skills - Maintenance requiring special skills shall be minimized.

s. EVA - Maintenance requiring EVA shall be minimized.

t. Soldering, Welding, and Brazing - Soldering, welding, brazing, and similar operations during maintenance shall be minimized.

12.3.1.2 Physical Accessibility Design Requirements

{A}

Design requirements for physical access to equipment for the purpose of maintainability are provided below.

a. Relative Accessibility - Items most critical to system operation and which require rapid maintenance shall be most accessible. When relative criticality is not a factor, items requiring most frequent access shall be most accessible.

b. Access Dimensions - The minimum sizes for access openings for two hands, one hand, and fingers are shown in Figure 12.3.1.2-1.

c. Access - Access to inspect or replace an item (e.g., an ORU) shall not require removal of more than one access cover.

(Refer to Paragraph 11.4.3, Closures and Covers Design Requirements, for specific requirements.)

d. Mounted Components - When feasible, components shall be no more than one deep in a bay or rack.

(Refer to Paragraph 11.5.3.1, General Mounting Design Requirements, for specific requirements)

*e. Environmental Control and Life Support Systems (ECLS) - Subsystem equipment supporting ECLS for safe **IVA** environment shall be accessible, removable, and repairable by an EVA suited crewmember.*

(Refer to Paragraph 14.3.2.5, EVA Working Envelope, for additional information.)

f. Shape - Accesses shall be designed to the shape that will enable the crewmember to do his/her job and not be limited only to conventional shapes.

g. Number of Accesses - Whenever possible, one large access shall be provided rather than a number of small ones.

h. Protective Edges - Protective edges or fillets shall be provided on accesses that might injure crewmembers or their equipment.

(Refer to Paragraph 6.3.3, Mechanical Hazards, for specific requirements.)

i. Covers- - Where physical access is required, one of the following practices shall be followed, with the order of preference as given.

1. Provide a sliding, translating, or hinged cap or door where debris, moisture, or other foreign materials might otherwise create a problem.

2. Provide a quick-opening cover plate in a cap that will meet stress requirements.

j. Self-Suporting Covers - All access covers that are not completely removable shall be self-supporting in the open position.

k. Rear Access - Sliding, rotating, or hinged equipment to which rear access is required shall be free to open, translate or rotate its full distance.

Minimal two-hand access openings without visual access

Reaching with both hands to depth of 150mm (6.0 in) to 490 mm (19.25 in)

Light clothing	Width:	200 mm (8.0 in) or the depth of reach
	Height:	125 mm (5.0 in.)

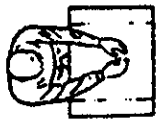

Reaching full arm's length (to shoulders) with both arms (light clothing)

Width:	500 mm (19.5 in)
Height:	125 mm (5.0 in)

Inserting box grasped by handles on the front:

13 mm (0.5 in) clearance around box, assuming adequate clearance around handles

Inserting box with hands on the sides:

Light clothing:	Width:	Box plus 115 mm (4.5 in)
	‡ Height:	125 mm (5.0 in) or 13 mm (0.5 in) around box *

* *Whichever is larger*
‡ If hands curl around bottom, allow an extra 38 mm (1.5 in.) for light clothing

Minimal one-hand access openings without visual access

	Height	Width
Empty hand, to wrist:		
Bare hand, rolled	95 mm (3.75 in) sq or dia	
Bare hand, flat	55 mm (2.25 in) x 100 mm (4 in) or 100 mm (4 in) dia	
Clenched hand, to wrist:		
Bare hand:	95 mm (3.75 in) x 125 mm (5.0 in) or 125 mm (5.0 in) dia	
Arm to elbow:		
Light clothing:	100 mm (4.0 in) x 115 mm (4.5 in)	
Arm to shoulder:		
Light clothing:	125 mm (5.0 in) sq or dia	

Minimal finger-access to first joint

Push button access:	Bare hand:	32 mm dia (1.26 in)
	Thermal gloved hand:	38 mm dia (1.5 in)
Two finger twist access:	Bare hand:	object plus 50 mm (1.97 in)
	Thermal gloved hand:	object plus 65 mm (2.56 in)

MSIS-297
REV A

Reference: 2, Page 184

Figure 12.3.1.2-1. Minimum Sizes for Access Openings for Two Hands, Ond Hand, and Fingers

l. Damage Inspection and Repair - Where feasible , the design of structures and equipment, including their interfaces and all portions of the pressure shell, bulkheads , and seals shall be accessible for damage inspection and repair. This shall apply to exterior as well as to interior surfaces.

m. Use of Tools and Test Equipment- Check points, adjustment points, test points, cables, connectors, and labels shall be accessible and visible during maintenance. Sufficient space shall be provided for the use of test equipment and other required tools without difficulty or hazard.

n. Fold-Out/Pull Out Drawers and Cabinets - Fold -Out/pull-out drawers and cabinets shall be used where possible to provide ease of access.

o. Slide-Out Stops - Limit stops shall be provided on racks and drawers which are required to be pulled out of their installed positions for maintenance. The limit stop design shall permit convenient overriding of stops of or unit removal.

p. Service Points for Fluid Systems - Service points for filling, draining, and purging or bleeding shall be in accessible locations.

q. Plug Connectors - Full access shall be provided to plug connectors.

r. Cables:

1. Cable access - Cables shall be routed so as to be readily accessible for inspection and repair.

2. Cable trays - Wire harness and fluid lines mounted in cable trays shall be located for ready access.

3. Cable loops - Panel, console, and rack mounted components shall have slack cable lengths or maintenance loops sufficient for removal ofthe connectors after the component has been extracted from its intstalled location, unless adequate internal access (physical and visual) is provided.

4. Cable Routing - Cables shall not be routed external to the face of the equipment rack.

s. Fuses and Circuit Breakers - Fuses and circuit breakers shall be readily accessible for removal, replacement, and resetting. The condition of fuses (good or blown) shall be readily discernable without having to remove the fuse.

t. Structural Members - Structural components of units or chassis shall not prevent access to or removal of equipment.

u. Hazardous Conditions - If a hazardous condition exists behind an access, a safety indictor shall be provided. The access shall be equipped with an interlock that will deenergize the hazardous conditions when the barrier is opened or removed, and a manual override shall be provided.

v. Structural Loads and Deformations - Compartment doors, access panels, and structural attachments for equipment that is to be removed and reinstalled shall be designed to be operated in both ground and orbit environments, being insensitive to structural deformation caused by change in g-loading, pressure differential, etc.

12.3.1.3 Visual Access Design Requirements

{A}

Requirements for visual access are provided below.

a. Visual Access - Where visual access only is required, the following practices shall be followed with the order of preference as given.

1. Provide an opening with no cover except where this might degrade system performance.

2. Provide a transparent window if dirt, moisture, or other foreign materials might create a problem.

3. Provide a quick-opening metal cover if a transparent cover will not meet stress or other requirements.

b. Visual and Manual Access - If the crewmember has to be able to see the task, design of the access shall be large enough to allow simultaneous visual as well as physical access; otherwise a separate window shall be provided for visual access to monitor task performance. (Refer to Paragraph 12.3.1.2, Physical Accessibility Design Requirements, for additional requirements.)

c. Labeling:

(Refer to Paragraph 9.5, Labeling and Coding, and Paragraph 9.4.4, Caution and Warning Displays, for related requirements.)

1. Access labeling - Each equipment access shall be labeled to indicate items visible or accessible through it.

2. Visibility - Relevant labels and mounting instructions shall be visible during all maintenance activities.

3. Identification labels - Each access shall be labeled with a number, letter, or other symbol which is directly cross-referenced to the maintenance procedures.

4. Plug configuration labels - When a plug-in device has to be inserted through a hole with limited visual access, a label adjacent to the access shall indicate how the pins on the device will align with the holes in the socket.

5. Component identification labels - Electrical cables, fluid lines, and other subsystem protective shields shall be labeled or otherwise coded to allow for positive identification.

6. Hazard labels - Accesses shall be labeled with appropriate hazard labels, advising of any hazard existing beyond the access and stating necessary precautions.

7. Hinged cover labels - If instructions applying to a covered item are lettered on a hinged door, the lettering shall be oriented to be read by the crewmember performing maintenance when the door is opened.

(Refer to Paragraph 9.5.3, Labeling and Coding Design Requirements, for additional requirements.)

d. Fluid and Gas Line Connectors - Where feasible, fluid and gas connectors shall be located and configured so they can be inspected, and so that any leakage is obvious.

(Refer to Paragraph 11.10, Connector Design Requirements, for other connector requirements.)

12.3.1.4 Removal, Replacement and Modularity Design Requirements

{A}

Design requirements for removal, replacement, and modularity are provided below.

(Refer to Paragraph 11.5.3.2, Alignment Devices Design Requirements, and Paragraph 11.5.3.1, General Mounting Design Requirements, for additional requirements.)

a. Removal - Systems and subsystems shall be designed so that failed Orbital Replacement Units (ORU's) can be removed without damaging or disturbing other components.

b. Surface Removal - Replaceable units shall be designed for removal through the surface facing the crewmember as he works on the equipment.

(Refer to Paragraph 11.5.3.1, General Mounting Requirements, for other specific requirements)

c. Independence - Where feasible, it shall not be necessary to remove or disable an operable unit to obtain access to a defective replaceable unit.

d. Component Labeling - Each removable component and its position on the unit shall be labeled with corresponding numbers or other identification.

(Refer to Paragraph 9.5.3, Labeling and Coding Design Requirements, for specific requirements.)

e. Isolation Valves - Subsystems that contain liquids or high pressure gases (pressures exceeding 125 psia) and require maintenance shall be provided with isolation or disconnect valves to permit isolation and servicing and to aid in leak detection.

f. Spillage control - Replaceable units shall be designed to control spillage and the release of gases during removal or replacement.

g. Energized Units - Replaceable units and payloads which supply or receive energy shall be designed so that the power can be removed before repair, removal, or replacement is attempted. If stored energy can pose a hazard, provisions shall be made for its dissipation prior to maintenance.

(Refer to Section 6.4, Electrical Hazards Design Requirements, for specific requirements.)

h. Fastener Coatings - Paint and/or coatings shall not adversely affect removal or installation of fasteners.

i. Short Life Components - Easy replacement shall be provided for components that fail frequently (e.g., lamps and fuses).

j. Guide Pins - For mounting and replacement of replaceable units, guides and guide pins shall be provided for alignment.

k. Replacement Specificity - All replaceable items shall be designed so that it will be physically impossible to insert the unit incorrectly.

l. Related Items - Items of the same or similar form which have different functional properties shall be readily identifiable and distinguishable, and shall not be physically interchangeable. This indication shall be readily discernable with the component in its installed position.

12.3.2 Testability Design Requirements

{A}

12.3.2.1 Fault Detection and Isolation Design Requirements

{A}

Design requirements for fault detection and isolation are provided below.

(Refer to Paragraph 9.4.4.3, Caution and Warning Display Design Requirements, Paragraph 9.4.2.3, Visual Displays Design Requirements, and Paragraph 9.3.3, Control Design Requirements, for specific requirements.)

a. General - Equipment design shall facilitate rapid and positive fault detection and isolation of defective items.

b. Checkout - On-board fault detection/isolation shall be automated and pre-programmed for mission-critical and/or life support systems. On-demand system checkout shall also be available.

c. Diagnostic Capability - Equipment shall have an integrated diagnostic capability for

all functional failures identified as known or expected to occur, in mission-critical and life support systems.

d. Replacement Unit Status - When feasible, REPLACEMENT UNIT design and configuration shall permit verification of operational status prior to installation without the need for disassembly.

e. Sensors - The status of sensors on replacement units shall be verifiable with respect to accuracy and proper operation.

f. Manual Override - A manual override capability for all automatic control functions shall be provided.

g. Portable Equipment - When built-in test equipment is not available, diagnostic tools and/or portable equipment shall be provided for fault isolation to the replacement unit level.

h. Critical Malfunction Alarm - If critical equipment is not regularly monitored an alarm (auditory, visual, or both) shall be designed to ensure detection.

i. Power Failure Indication - An indication shall be provided to reveal power failures.

j. Power Interrupt - A positive indication of an open circuit shall be provided by a fuse or circuit breaker.

k. Out of Tolerance - A positive indication shall be provided when equipment has failed or is not operating within tolerance limits.

l. Trouble-shooting Sequence - A sequence of trouble-shooting checks shall be specified to maximize trouble-shooting efficiency.

m. Test Equipment Verification - All electronic test equipment shall have built-in test capability.

n. Test Equipment Accuracy - The accuracy of all test equipment shall exceed that of the equipment being tested.

o. Adjustment Controls - Appropriate feedback shall be provided for all adjustment controls and shall be readily discernible to the person making the adjustment while making the adjustment. Adjustment controls shall be reversible without dead band, slop, hysteresis, or striction as reversal.

p. Calibration Damage - Calibration or adjustment controls shall be provided with appropriate stops to prevent damage to the system. Calibration controls shall provide an indication (visual or audible) when stops are reached.

12.3.2.2 Test Point Design Requirements

{A}

Design requirements for test points are provided below.

(Refer to Paragraph 9.2.3.2, C/D Placement and Integration - Design Requirements, Paragraph 9.4.4.3, Caution and Warning Design Requirements, and Paragraph 9.5.3, Labeling and Coding Design Requirements, for additional requirements.)

a. Self-Checking - Appropriate test points shall be provided where a unit is not completely self-checking.

b. Proximity - Test points shall be provided at or near maintenance locations.

c. Adjustment - Test points used in adjusting a unit shall be in physical and visual proximity of the controls and displays used in the instrument.

d. Labeling - Each test point shall be clearly labeled with a description of its function, or, at a minimum, with a code number keyed to the maintenance manual.

e. Warning Labels - Test points shall be marked with appropriate warning labels when the application of conventional test probes could cause damage to internal circuits (e.g., integrated circuits) or injury to personnel.

f. Troubleshooting - Sufficient test points shall be provided so that it will not be necessary to remove sub-assemblies to accomplish troubleshooting/fault diagnosis.

g. Test Cable Termination - If it is essential that test cables terminate on control and display panels, the panel test receptacles shall be located so that the test cables will not interfere with controls and displays.

h. Layout - Primary test points shall be grouped in a line or matrix that reflects the sequence of tests to be performed.

i. Grouping - A control panel or a series of functionally autonomous panels shall be used to group test points whenever possible.

j. Testing and Servicing - Rear plug connectors shall be accessible for testing and servicing except where precluded by potting, sealing, or other requirements.

12.3.3 Maintenance Information Mgmt. Systems Design Requirements

{A}

Design requirements for maintenance information management systems are provided below.

(Refer to Paragraph 13.4.3, Information Management Design Requirements, for other specific requirements.)

a. System Capabilities - As a minimum, the on-board information systems shall provide:

1. Command and status indications to/from all subsystems for the purpose of system maintenance and trouble-shooting procedures.

2. Trend data acquisition and analysis.

3. Status of consumables.

4. Fault detection/isolation.

5. Scheduled maintenance data.

6. Repair/replacement information.

7. Replacement unit maintenance history and maintenance checklists.

b. Recording and Retrieval - The system shall provide for the recording and retrieving of maintenance information in near real-time.

c. Fail Operational Systems - All systems that incorporate an automated fail-operational capability shall be designed to provide crew notification and data management system cognizance of malfunctions until the faults have been corrected.

d. Replacement Unit Characteristics - A characteristic matrix of all replacement units shall be included in the data base containing such information as:

1. Replacement unit ID number.

2. Bite (replacement units containing built-in-test-equipment).

3. Hazardous system factors.

4. Critical system status.

5. Availability.

6. Shelf-life limits.

7. Serial number traceable to manufacturer.

8. Batch data.

9. Date of manufacture.

10. Storage constraints.

e. Sparing Status - Replacement unit sparing status shall be provided to ensure that procedures and on-board repair materials are adequate for each mission.

f. Spares Inventory - Th automated information management system shall contain an on-orbit spares inventory to identify the numbers and locations of replacement units stowed in the space module.

(Refer to Paragraph 13.3.3, Inventory Control Design Requirements, for specific requirements.)

Table of Contents

		Page
13.0	**FACILITY MANAGEMENT**	**13-1**
13.1	**INTRODUCTION**	**13-1**
13.2	**HOUSEKEEPING**	**13-1**
13.2.1	Introduction	13-1
13.2.2	Housekeeping Design Considerations	13-1
13.2.3	Housekeeping Design Requirements	13-2
13.2.3.1	General Housekeeping Design Requirements	13-2
13.2.3.2	Surface Cleaning Design Requirements	13-3
13.2.3.3	Vacuum Cleaning Design Requirements	13-4
13.2.3.4	Air Filter Design Requirements	13-4
13.2.4	Example Housekeeping Design Solutions	13-4
13.3	**INVENTORY CONTROL**	**13-5**
13.3.1	Introduction	13-5
13.3.2	Inventory Control Design Considerations	13-5
13.3.3	Inventory Control Design Requirements	13-6
13.3.3.1	General Inventory Control Design Requirements	13-7
13.3.3.2	Inventory Control Reports Requirements	13-7
13.4	**INFORMATION MANAGEMENT**	**13-7**
13.4.1	Introduction	13-7
13.4.2	Information Management Design Considerations	13-8
13.4.3	Information Management Design Requirements	13-8
13.4.3.1	General Information Management Design Requirements	13-8

13.4.3.2 Hardcopy InIormation Management Design Requirements 13-9

13.4.3.3 Electronic Information Management Design Requirements 13-9

13.4.4 Example Information Management Design Solutions 13-10

13.0 FACILITY MANAGEMENT
{A}

13.1 INTRODUCTION
{A}

This section provides the design considerations, requirements, and examples for the facility management functions of housekeeping, inventory control, and information management.

13.2 HOUSEKEEPING
{A}

13.2.1 Introduction
{A}

This section addresses the design considerations, design requirements, and example design solutions for housekeeping. This includes design for ease of cleaning, decontamination, servicing, and on-orbit repair.

Refer to the following paragraphs for other housekeeping topics:

5.1.3 Long-Term Mission Atmosphere Design Requirements

10.5.3.4 Galley and Wardroom Cleaning Design Requirements

10.10.3 Laundry Facility Design Requirements

10.11.3 Trash Management Facility Design Requirements

10.12.3 Stowage Design Requirements

13.4.3 Information Management Design Requirements

13.2.2 Housekeeping Design Considerations
{A}

Housekeeping is a crucial part of habitability. It plays an important role in maintaining the crew's health and safety and, consequently, their morale, comfort, and productivity. Manned spacecraft with missions of long duration increase the need for housekeeping capabilities.

The principal sources of microbes, chemicals, and debris that cause housekeeping problems are the crewmembers (finger nail clippings, hair, dead skin, finger prints, etc.); clothing (lint); food (liquid and solid food spills); maintenance (loose parts, filings, leaks from disconnected valves, etc.); and payloads (animals, chemicals, effluents, etc.). Microgravity causes this debris to migrate and lodge on all surfaces. Cracks and crevices particularly collect debris.

Food and drink spills occur frequently. Cleanup in the Skylab was not easy because of the grid floor as well as other hard-to-get-to spots. The use of a wet rag became the standard procedure for cleaning up the food spills. Food disposal areas caused odors and required frequent cleaning with biocide wipes.

In Skylab, biocide wipes did a satisfactory job, but were tedious to use. Crews prefer a single-step biocide that does not have to be washed off. A handle, holder, or gloves are preferred when using biocide wipes as the biocides stain the hands. An aerosol biocide would be useful. Crews have requested an aromatic disinfectant. Urine spills were cleaned up satisfactorily by biocide wipes. Removal of the urine odor is especially important.

Soft rags are superior to tissue wipes for cleaning up large areas.

Mold and mildew flourish on surfaces that are damp, wet, poorly ventilated, and poorly lit. Therefore, grooming, dining, and food preparation areas should be dried and aired regularly, and should be well illuminated.

A vacuum cleaner was used effectively on the Skylab and the Shuttle. It was used to remove dust, lint, liquids, and debris from surfaces and air filters. It provided for easy removal and disposal of the debris. A vacuum

cleaner was used in the Skylab for removing water from the shower walls. Crewmembers have criticized the noise level, the limited suction, and the available attachments. The vacuum cleaning system should be very easy to use. The equipment should be easy to maintain and repair. Disposable vacuum cleaner bags should be easily replaced.

Air revitalization system and air-cooled equipment filters collect various types of debris including tape, lint, hair, small parts, tissues, nail clippings, and food crumbs. The filters require convenient access for them to be cleaned with the vacuum cleaner and for retrieval of small lost items. Vacuum cleaner attachments should be designed to be compatible with the various filter configurations.

The greatest practical precautions should be taken to ensure freedom from debris and surface contamination during the manufacturing through launch sequence.

13.2.3 Housekeeping Design Requirements

{A}

13.2.3.1 General Housekeeping Design Requirements

{A}

All systems shall be designed to minimize the need for housekeeping. The following general requirements shall be observed:

a. Contamination Control During Ground Handling - The greatest practicable precautions shall be taken to ensure freedom from debris and surface contamination within the space module and individual systems and components during the ground operations from manufacture to launch.

b. Surface Materials - Materials used for exposed interior surfaces shall be selected to minimize particulate and microbial contamination and be easy to clean (i.e., shall be smooth, solid, nonporous).

c. Grids and Uneven Surfaces - Grids and uneven surfaces shall either not be used or they shall be easy to remove and easy to clean.

d. Cracks and Crevices - All interior structural surfaces and equipment shall be free of narrow openings and crevices that can collect liquid or particulate matter or that require a special tool for cleaning.

e. Closures - Closures shall be provided for any area that cannot be easily cleaned.

(Refer to Paragraph 11.4, Closures, for specific design considerations and requirements.)

f. Fluid and Debris Collection/Containment - Means shall be provided for collecting and/or containing any loose fluids or debris that may result from operational use, component replacement, maintenance, service or repair.

g. Built-in Control - Any subsystem which routinely utilizes containers of liquids or particulate matter shall have built-in equipment/methods for capture or prevention of vaporization into the atmosphere, prevention of material overflow from use, and methods of decontamination of spills.

1. The capture elements shall be easily accessed for replacement or cleaning without risk of dispersion of the trapped materials.

2. Grid, screen, or filter surfaces shall be directly accessible for cleaning.

(Refer to Paragraph 13.2.3.4 Air Filter Design Requirements, for filter requirements.)

h. Transfer Containers - Transfer containers, if required, shall be so constructed as to prevent contamination during transfer and disposal.

13.2.3.2 Surface Cleaning Design Requirements

{A}

The following surface cleaning provisions are required:

a. Microbiological Analyses/Biocide Selection - A means shall be provided for the collection and identification of microbial samples from all types of surfaces and for the selection and application of an appropriate biocide.

b. Cleaning Chemicals - Cleaning chemicals shall meet the following requirements:

1. Shall be low sudsing.

2. Shall be safe for use in an enclosed environment.

3. Shall be compatible with onboard water reclamation and/or waste disposal systems.

4. Shall not stain or discolor the surface being cleaned.

5. Shall be in an easy-to-use, controllable content container.

6. Shall not produce a foul, unpleasant, lingering odor.

c. Illumination - Adequate illumination for visual inspection and cleaning of both internal and external housekeeping features.

(Refer to Paragraph 8.13.3, Lighting Design Requirements, for specific illumination requirements.)

d. Wipes - The following types of wipes for use in general housekeeping and personal hygiene shall be provided:

1. Dry wipes - Utility tissue used as toilet tissue and for compartment and equipment cleaning.

2. Wet wipes - Saturated tissues to be used for personal cleansing.

3. Biocide wipes - Biocide-saturated pads used for disinfecting food spills, waste management systems, etc.

4. Reusable wipes - Utility handwipes that can be impregnated or dampened with premixed evaporative detergent/biocidal solutions or with water.

5. Detergent wipes - Detergent saturated tissues for interior cleaning tasks, food spills, etc.

6. Utensil Cleansing Wipes - Cleaning agent and sanitizers impregnated into tissues for post-meal utensil cleansing and sanitizing.

e. Cleaning Implements - Provide means for dislodging and collecting dirt and debris from surfaces, cracks, and crevices.

f. One-Handed Operation - Cleaning equipment and supplies shall be designed for one-handed operation or use.

g. Housekeeping Cleansing Agents - A non-biocidal cleansing agent or agents, shall be provided for general purpose surface cleansing in which specific biological control is not required. A biocidal cleansing agent or agents shall be provided for clean-up of biological spills and biologically contaminated surfaces.

h. Biofilm Control - Means shall be provided to control the formation and growth of biofilm on the inside surfaces of all fluid lines and pipes so as not to degrade the mission.

13.2.3.3 Vacuum Cleaning Design Requirements

{A}

An onboard vacuum cleaner shall be provided. It shall meet the following requirements:

a. Suction - The system shall provide adequate suction capability for the collection and retention of both wet and dry particulate matter and of liquids.

b. Noise Level - The system shall have noise levels compatible with Paragraph 5.4.3.2.

(Refer to Paragraph 5.4.3.2, Noise Exposure Requirements, for noise exposure design requirements.)

c. Attachments - The system shall provide an assortment of attachments which conform to the various surfaces that need to be cleaned (e.g., flat surfaces, filters, cracks, crevices, corners, etc.)

d. Disposable Bags - The system shall provide disposable bags:

1. Suitable for containing both dry and liquid wastes.

2. Compatible for compaction in a trash compactor.

3. Designed for long life, i.e., minimize frequency of replacement.

e. Lighting - Sufficient lighting shall be provided to illuminate the area to be cleaned.

f. Nonpropulsive - Propulsive characteristics and self-generated torques of the system shall be compensated for in the design.

13.2.3.4 Air Filter Design Requirements

{A}

Filters used in the air revitalization system and air- cooled equipment collect airborne debris and, therefore, become an indirect but important element of the housekeeping system. Equipment filters shall be designed to provide the following housekeeping features:

a. Access - Air filters (grids, screens, filter surfaces) shall be readily accessible for cleaning and replacement without disturbance of collected material.

b. Configuration - Nondisposable air filters shall be configured to allow them to be cleaned by a vacuum cleaner attachment.

(Refer to Paragraph 13.2.3.1, General Housekeeping Design Requirements, item g, for other filter design requirements.)

c. Filter Condition - The design of the air filter shall incorporate the means to inform the crew of the overall condition of the filter (e.g., visual feedback, AP sensor).

13.2.4 Example Housekeeping Design Solutions

{A}

The following are examples of housekeeping items that have been used on the Shuttle orbiter (refer to Paragraph 13.2.2 for a discussion of the positive and negative features of these items):

a. Cleanser - A liquid biocidal detergent formulation in a squeeze-bottle-type container, with a built-in bladder, dispensing valve, and nozzle. The cleanser is sprayed on the surface that is to be cleaned and is then wiped clean with dry wipes. This cleanser is used to clean the urinal and toilet seat, walls, and floor.

b. Dry Wipes - Dry wipes are packaged in dispensers and are used for all general purpose cleaning jobs.

c. Wet Wipes - Wet wipes have been extensively used for general purpose cleaning. They have also been used for personal hygiene (hand cleaning, bathing, etc.)

d. Disposable Gloves - Plastic disposable gloves are provided for use when a crewmember is using the biocidal cleanser, which would otherwise stain their hands.

e. Vacuum Cleaner - A portable vacuum cleaner that can be hand carried is provided for general housekeeping and for cleaning air filters.

13.3 INVENTORY CONTROL

{A}

13.3.1 Introduction

{A}

This section provides the considerations and requirements for onboard inventory control systems design.

The inventory control function is one of the primary elements of onboard information management (refer to Paragraph 13.4, Information Management). Inventory control is directly related to the stowage design considerations and requirements addressed in Paragraph 10.12 (Stowage). Also, refer to the labeling and coding requirements given in Paragraph 9.5 (Labeling and Coding).

13.3.2 Inventory Control Design Considerations

{A}

One of the most difficult areas of flight data management for manned spaceflights has been the creation and maintenance of the on-board inventory management system that keeps track of inventory such as crew equipment, consumables, food, experimental materials, etc., and where these items are located. Of necessity, the stowage list and the launch, on-orbit, and return stowage locations constantly change. This requires frequent, late, and significant revisions to stowage documentation, which is the crew's overall reference on loose item location, quantity, and transfers. Every change to the inventory and stowage location impacts other documentation. For example, checklists that contain reference to stowage data must be updated if the location of an item is changed.

Several instances arose in Skylab where an item became "lost" and the ground had to institute a search through transcripts and by questioning the crew about last usage or sighting.

A significant problem associated with inventory control which was experienced in the Skylab was the nomenclature used in referring to the various hardware, consumables, stowage locations, etc. Many names existed for a single item. This lack of standardization resulted in confusion, ambiguity, and lost time when communicating among various users.

Crewmember time is a most costly resource, so it is necessary to minimize the time required for the "overhead" involved in the inventory control function. A reliable, easy-to-use inventory control system will, therefore, be a cost effective investment. Advances in the state-of-the-art of onboard computers, data storage devices, software, bar coding systems, and communications data links make a computerized inventory control data management system feasible and desirable.

The inventory control system must be capable of providing both on-line and hardcopy reports. On-line reports are used for a) display of information in connection with making updates to the database and b) real-time display of information for crew activity planning and flight control activities. Hardcopy reports are used for a) a hand-carried reference when verifying stowage locations, quantities, etc., and b) for a mark-up media for planning.

The inventory control database should include, as a minimum, the following data elements:

a. Item Number - The basic control number by which each item is identified in the database.

b. Item Name - The standard name used to describe the item.

c. Item Functional Designation - An easy-to-learn code that indicates the functional usage of the item.

d. Unit Weight - The weight in kilograms (pounds) of one unit of the item.

e. Unit Volume - The volume in cubic centimeters (cubic inches) of the envelope space required to stow a unit item.

f. Length - The length in centimeters (inches) of the envelope space necessary to contain the item.

g. Width - The width in centimeters (inches) of the envelope space necessary to contain the item.

h. Height - The height in centimeters (inches) of the envelope space necessary to contain the item.

i. Stowage Location - The stowage location code of the stowed item during each mission phase (e.g., launch, on- orbit, return).

j. Quantity Stowed in Each Location - The quantity of items stowed in each stowage location during each mission phase.

k. Total Quantity - The total quantity of each item during each mission phase.

l. "From" Location - The stowage location code from which stowed items are transferred during inflight phases of the mission.

m. "To" Location - The stowage location code to which stowed items are transferred during inflight phases of the mission.

n. Quantity Transferred - The quantity of items transferred (or scheduled to be transferred) from one location to another during inflight phases of the mission.

o. Performance History - A provision for recording crew comments pertinent to the condition and performance of the item during the inflight phases of the mission.

p. Stowage Location Maps - Stowage location illustrations are required to the extent that the difficulty in locating or transferring an item necessitates additional data to support the crew procedures.

q. Life Remaining - The shelf life remaining for consumables and the operating life remaining for operating hardware.

r. Limit Quantity - The quantity of items/consumables below which mission operations may be constrained.

s. Crew Identification - Indicate the name of the crewmember on personal items.

It is also necessary to distinguish the differences between the kinds of inventory control information required by the ground operations versus that of the onboard crew. Some of the onboard inventory control data should be capable of being communicated to the ground without onboard crew involvement.

13.3.3 Inventory Control Design Requirements

{A}

This section provides the man-system interface design requirements for computerized data management for onboard inventory control. General, database, and report requirements are given.

13.3.3.1 General Inventory Control Design Requirements

{A}

A computerized data management system for the onboard inventory system is required. This system shall provide the following capabilities:

a. Ground Compatibility - the onboard and ground inventory data formats shall be identical.

b. Telemetry - The inventory management system shall interface with the telemetry system for real-time uplink and downlink.

c. Automatic Updating - The system shall provide the capability to automatically revise the inventory control database and other data references affected by stowage/inventory changes.

d. Standard Procedures - The system shall provide a user/computer procedural interface that is standardized with other data management functions.

(Refer to the Section 9.6.3, User/Computer Interaction Design Requirements, for specific design requirements for the user/computer interface.)

e. Standard Nomenclature - The nomenclature used to refer to the items tracked by the inventory management system shall be identical to, and standardized with, that used on design drawings, training hardware, checklists, and procedures, labels, etc.

f. Cross Indexing - The information in the database shall be indexed with many cross reference categories to facilitate ease of data retrieval.

g. Minimize Inventory Control Crew Time - The inventory control system shall be designed to minimize the amount of crew time required for the inventory control functions. A design goal shall be that the inventory control function shall require no direct crew input, but rather shall automatically track items and update the database.

13.3.3.2 Inventory Control Reports Requirements

{A}

The inventory management system shall be capable of providing both on-line and hardcopy reports. At a minimum, the following types of reports shall be provided:

a. Item Status - Display the location(s) for an item that is selected by item number or item name. This report shall include the quantity of the item at each location.

b. Transfer Status - For an item selected by name or by number or for all items, provide a report that displays the "From Location", the "To Location", and the quantity to be transferred.

c. Location Status - Display items (by item number and item name) stowed in a specified stowage location. Quantity of each item in the specified location shall also be provided.

d. Limit Warning Report - Provide an alert message that indicates when quantities of consumables, or items, fall below a predetermined safe limit.

13.4 INFORMATION MANAGEMENT

{A}

13.4.1 Introduction

{A}

This section provides the design considerations, requirements, and examples for onboard information management. Information management refers to the storage, transmission, manipulation, and display of information. An information management system therefore includes all hardware and software to support these functions.

13.4.2 Information Management Design Considerations
{A}

Modern manned spacecraft presently use a combination of hardcopy documentation and electronic media for providing the onboard crew with the information they require for planning, operations, and maintenance activities.

Accessing data from either computer data records or from hardcopy documents is a significant time-consuming, and therefore costly, problem for the crew. Computer relational databases, video disks, and artificial intelligence systems should be considered for storing, retrieving and interpreting the large amounts of data.

Flight information that should be maintained in the onboard computers includes resource allocation status (e.g., power, thermal); subsystem performance trend data, maintenance data (e.g., schematics, procedures, reference data); medical imagery (e.g., X-rays); crewmember medical data, payload data, and inventory control records.

(Refer to Paragraph 13.3, Inventory Control, for design considerations and requirements.)

Some documents, maps, checklist cards, etc. are hardcopy items that may still be required even though electronic information management systems are used. The use of these hardcopy items creates a need for writing surfaces and stowage for the document's associated "office" supplies.

Typical office supplies include notebooks, pens, pencils, page clips, tape, and rubber bands. The pens and pencils have Velcro patches attached to them so that they can be restrained on the writing surface or other adjacent surface. In microgravity, document pages will not "lay down", so clips are used to keep the document opened to a selected page. Documents are restrained to surfaces using elastic bungee cords or other restraint devices such as Velcro patches attached to the backs of the page clips that interface with Velcro patches located on vehicle surfaces.

A design goal should be to eliminate as much hardcopy data, management material, and associated office supplies as possible.

13.4.3 Information Management Design Requirements
{A}

13.4.3.1 General Information Management Design Requirements
{A}

The following general requirements apply to both hardcopy or electronic information management systems:

a. Minimum Onboard Information - At a minimum the following information shall be accessible onboard:

1. System Maintenance and Troubleshooting Procedures

2. Trend data Acquisition and Analysis

3. Consumable Status

4. Payload Data Collection

5. Experiment Procedures

6. Repair and Replacement Information

7. Medical History

8. Inventory Control Data.

(Refer to Paragraph 13.3.3, Inventory Control Design Requirements.)

b. Information Management Facilities - Information management facilities shall be provided in the spacecraft for stowing, receiving, displaying, processing, and updating mission data.

c. Information Display Orientation - The information display provisions shall allow orientation of the data to the optimum position for use while performing the mission tasks that use the information.

d. Hands Free Use of Information - The information display provisions shall leave the crewmember's hands free once the data has been positioned.

e. Data File Organization - Means shall be provided to stow mission data in organized, segmented data files in which individual data records can be readily obtained.

f. Flight Data Hardcopy - As a minimum, hardcopy file data shall be maintained on board for all procedures for emergency operations of the spacecraft, continued crew safety, rescue, or escape.

13.4.3.2 Hardcopy Information Management Design Requirements

{A}

The following requirements pertain to hardcopy information media and associated hardcopy equipment and supplies:

a. Restraints :

1 . Equipment restraints - Means shall be provided for restraining documents, loose sheets of paper, writing implements, and supplies required for documentation update (tape, scissors, etc.) at each information management workstation.

(Refer to Paragraph 11.7.3.3, Equipment Restraints Design Requirements, for specific requirements.)

2. Personnel restraints - Means shall be provided to restrain the crewmembers at the various workstations in a manner that leaves both hands free for documentation update and recording.

(Refer to Paragraph 9.2.4.2.3, Workstation Restraints and Mobility Aids Design Requirements, for specific requirements.)

3. Document restraints - Means shall be provided to hold documents open to specific pages.

b. Writing/Working Surface - Fixed and portable writing/working surfaces shall be provided.

c. Writing Instruments and Supplies - Writing instruments and supplies required for documentation update (e.g., scissors and tape) shall be provided.

d. Stowage of Writing Instruments, Supplies, and Documents - Consolidated stowage shall be provided for writing instruments, supplies, and documents in locations that are accessible to a restrained crewmember.

(Refer to Paragraph 10.12.3, Stowage Facility Design Requirements, for specific requirements.)

e. Illumination - Adequate illumination shall be provided for each workstation where hand documentation normally will be prepared.

(Refer to Paragraph 8.13.3, Lighting Design Requirements.)

f. Onboard Printer/Copier - Capability for onboard preparation and duplication of hardcopy documentation shall be provided.

13.4.3.3 Electronic Information Management Design Requirements

{A}

Information located in electronic data storage shall be accessible using multiple access categories (e.g. multiple keywords).

(Refer to Paragraph 9.6.3.1.2, User/Computer Interaction Design Requirements, for specific electronic information interface design considerations and requirements.)

13.4.4 Example Information Management Design Solutions

{A}

The Shuttle Orbiter's Flight Data File (FDF) is the total onboard complement of flight operations documentation readily available to crewmembers. It is composed of, but not limited to, the items shown in Figure 13.4.4-1. The FDF is stowed in both fixed and portable containers and in cloth bags in such a manner as to be readily available to the crew on the flight deck and middeck and during airlock/cargo bay EVA and flight operations.

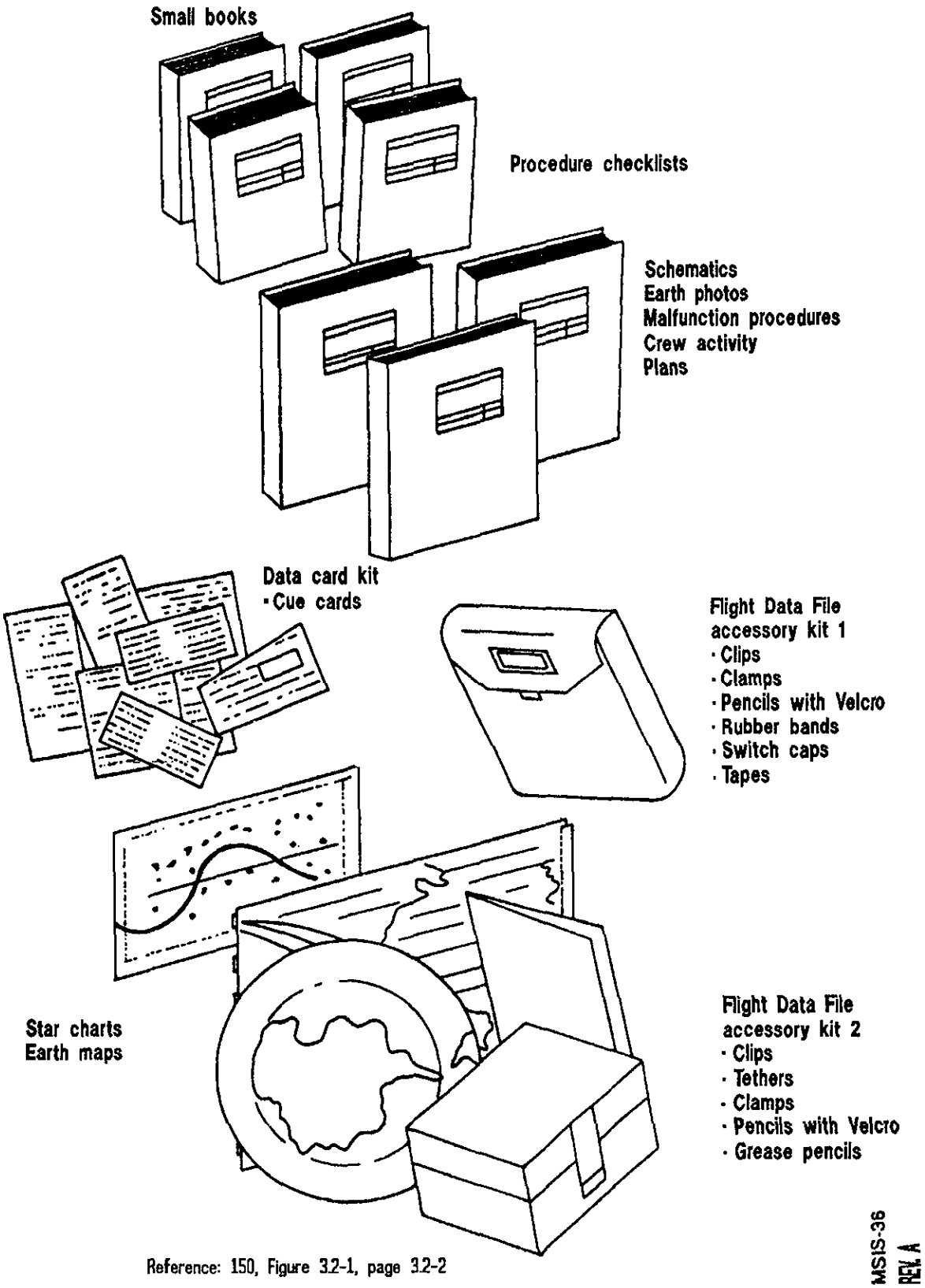

Reference: 150, Figure 3.2-1, page 3.2-2

Figure 13.4.4-1 Flight Data File (FDF) Items (Typical)

Table of Contents

		Page
14.0	**EXTRAVEHICULAR ACTIVITY (EVA)**	**14-1**
14.1	**GENERAL EVA INFORMATION**	**14-1**
14.1.1	General EVA Information Introduction	14-1
14.1.2	General EVA Design Considerations	14-1
14.1.2.1	EVA Compared to IVA and Alternative Approaches	14-2
14.1.2.1.1	Applications of EVA	14-2
14.1.2.1.2	Advantages of EVA	14-2
14.1.2.1.3	Limitations of EVA	14-3
14.1.2.1.4	Alternative Approaches to EVA	14-3
14.1.3	General EVA Safety Design Requirements	14-3
14.1.4	Space Suit Electrical Hazards Reduction Design Example	14-4
14.2	**EVA PHYSIOLOGY**	**14-4**
14.2.1	Introduction	14-4
14.2.2	EVA Physiological Design Considerations	14-4
14.2.2.1	EVA Vision Design Considerations	14-4
14.2.2.2	EVA Eye/Hand Coordination Design Considerations	14-5
14.2.2.3	EVA Reaction Time Design Considerations	14-5
14.2.2.4	EVA Strength-Related Design Considerations	14-5
14.2.2.5	EVA Workload Design Considerations	14-5
14.2.2.6	EVA Food and Drinking Water Design Considerations	14-5
14.2.2.7	EVA Body Waste Management Design Considerations	14-5
14.2.2.8	EVA Medical Monitoring Design Considerations	14-6

14.2.2.9 EVA Suit Pressure Design Considerations 14-6

14.2.2.10 EVA Radiation Dosage Design Considerations 14-6

14.2.2.11 EVA Touch Temperature Considerations 14-8

14.2.3 EVA Physiological Design Requirements 14-8

14.2.3.1 EVA Vision Design Requirements 14-8

14.2.3.2 EVA Eye/Hand Coordination Design Requirements 14-8

14.2.3.3 EVA Reaction Time Design Requirements 14-8

14.2.3.4 EVA Strength-Related Design Requirements 14-8

14.2.3.5 EVA Metabolic Workload Design Requirements 14-8

14.2.3.6 EVA Food and Dinking Water Design Requirements 14-8

14.2.3.7 EVA Body Waste Management Design Requirements 14-9

14.2.3.8 EVA Medical Monitoring Design Requirements 14-9

14.2.3.9 EVA Suit Pressure Design Requirements 14-10

14.2.3.10 EVA Radiation Dosage Design Requirements 14-10

14.2.3.11 EVA Touch Temperature and Pressure Design Requirements 14-12

14.2.4 Example EVA Physiological Design Solutions 14-12

14.2.4.1 EVA Body Waste Management Example Design Solutions 14-12

14.2.4.2 EVA Food and Drinking Water Example Design Solution 14-12

14.2.4.3 EVA Example Medical Monitoring Design Solutions 14-12

14.2.4.4 EVA Radiation Dosage Example Design Solutions 14-15

14.2.4.5 EVA Glove Example Design Solutions 14-15

14.3 EVA ANTHROPOMETRY 14-16

14.3.1 Introduction 14-16

14.3.2 EVA Anthropometric Design Considerations 14-16

14.3.2.1 Space Suit Design Considerations and Dimensions 14-17

14.3.2.1.1 Space Suit Glove Design Considerations and Dimensions 14-17

14.3.2.1.2 Space Suit Boot Design Considerations and Dimensions 14-18

14.3.2.1.3 Space Suit Helmet Design Considerations and Dimensions 14-18

14.3.2.2 Space Suit Joint Motion Design Considerations 14-18

14.3.2.3 EVA Movement Ranges 14-18

14.3.2.3.1 Functional Data Design Requirements 14-18

14.3.2.4 EVA Neutral Body Posture 14-18

14.3.2.5 EVA Working Envelopes 14-21

14.3.2.6 EVA Head Movement and Viewing Limits 14-21

14.3.2.7 EVA Space Suit Measurement Considerations 14-21

14.3.3 EVA Anthropometry Design Requirements 14-22

14.3.4 Example EVA Anthropomemc Design Solutions 14-22

14.3.4.1 STS EMU Dimensions 14-22

14.3.4.2 STS EMU Boot Dimensions 14-22

14.3.4.3 Example Pressure Suit Joint Mobility 14-22

14.3.4.4 STS EVA Helmet Visual Range 14-22

14.3.4.5 STS EMU Man Induced Load Examples 14-32

14.4 EVA WORKSTATIONS AND RESTRAINTS 14-33

14.4.1 Introduction 14-33

14.4.2 EVA Workstation and Restraint Design Considerations 14-33

14.4.2.1 EVA Work Envelope Design Considerations 14-33

14.4.2.2 Hardware Design Considerations for EVA Access 14-33

14.4.2.3 EVA Controls and Displays Design Considerations 14-34

14.4.2.4 EVA Workstations Lighting Design Considerations 14-34

14.4.2.5 EVA Crew Restraint Design Considerations. 14-35

14.4.3 EVA Workstation and Restraint Design Requirements 14-35

14.4.3.1 EVA Work Envelope Design Requirements 14-35

14.4.3.2 EVA Control and Display Design Requirements 14-35

14.4.3.3 EVA Workstation Lighting Design Requirements 14-36

14.4.3.4 EVA Crew Restraint Design Requirements 14-38

14.4.3.5 EVA Equipment Tether Design Requirements 14-39

14.4.4 Example EVA Workstation and Restraint Design Solutions 14-40

14.4.4.1 EVAWorkstation Lighting Example Design Solutions 14-40

14.4.4.2 EVA Crew Restraint Example Design Solutions 14-40

14.4.4.3 EVA Equipment Tether Hook Example Design Solution 14-40

14.5 EVA MOBILITY AND TRANSLATION 14-40

14.5.1 Introduction 14-40

14.5.2 EVA Mobility and Translation Design Considerations 14-40

14.5.2.1 EVA Translation Route Design Considerations 14-46

14.5.2.2 EVA Mobility Aids Design Considerations 14-46

14.5.2.3 EVA Translation Restraints Design Considerations 14-46

14.5.2.4 EVA Airlock Design Considerations 14-48

14.5.2.5 EVA Passageway Design Considerations 14-48

14.5.2.6 EVA Equipment Transfer Design Considerations 14-48

14.5.3 EVA Mobility and Translation Design Requirements 14-49

14.5.3.1 EVA Translation Route Design Requirements 14-49

14.5.3.2 EVA Mobility Aids Design Requirements 14-50

14.5.3.3 EVA Translation Restraints Design Requirements 14-52

14.5.3.4 EVA Airlock Design Requirements 14-52

14.5.3.5 EVA Passageway Design Requirements 14-52

14.5.3.6 EVA Equipment Transfer Design Requirements 14-52

14.6 EVA TOOLS, FASTENERS, AND CONNECTORS 14-52

14.6.1 Introduction 14-52

14.6.2 EVA Tools 14-52

14.6.2.1 Introduction 14-52

14.6.2.2 EVA Tools Design Considerations 14-53

14.6.2.3 EVA Tools Design Requirements 14-53

14.6.2.4 Example EVA Tools Design Solutions 14-55

14.6.2.4.1 Example EVA Hand Tool Design Solutions 14-55

14.6.2.4.2 Example EVA Power Tool Design Solutions 14-55

14.6.3 EVA Fasteners 14-55

14.6.3.1 Introduction 14-55

14.6.3.2 EVA Fasteners Design Considerations 14-55

14.6.3.3 EVA Fasteners Design Requirements 14-58

14.6.4 EVA Connectors 14-58

14.6.4.1 Introduction 14-58

14.6.4.2 EVA Connectors Design Considerations 14-58

14.6.4.3 EVA Connectors Design Requirements 14-58

14.7 EVA ENHANCEMENT SYSTEMS 14-60

14.7.1 Introduction 14-60

14.7.2 EVA Enhancement Systems Design Considerations 14-60

14.7.3 EVA Enhancement Systems Design Requirements 14-62

14.7.4 EVA Enhancement Systems Example Design Solutions 14-62

14.7.4.1 Manned Maneuvering Unit (MMU) 14-62

14.7.4.2 Remote Manipulator System (RMS) 14-62

14.7.4.3 Manipulator Foot Restraint (MFR) 14-64

14.0 EXTRAVEHICULAR ACTIVITY (EVA)

{A}

14.1 GENERAL EVA INFORMATION

{A}

14.1.1 General EVA Information Introduction

{A}

This section establishes guidelines for Extravehicular Activity (EVA). EVA is any activity performed by a pressure-suited crewmember in unpressurized or space environments. EVA begins with depressurization of the airlock or space module, and ends with repressurization of the space module or airlock after crewmember ingress. This includes any internal activities where a pressure-suited crewmember may be operating in normal modes of operation (e.g., airlocks, passageways, unpressurized work areas, donning/doffing areas) and abnormal modes of operation (e.g., unpressurized modules).

14.1.2 General EVA Design Considerations

{A}

EVA can provide an effective means for service, maintenance, repair, or replacement of space equipment without the need to remove it to a pressurized environment, return it to Earth or abandon it.

a. Classes - There are two basic classes of EVA:

1. Planned EVA - Conducted to accomplish tasks included in the nominally scheduled timeline to support selected mission operations.

2. Unplanned EVA - Conducted to accomplish tasks not included in the nominally scheduled timeline, but which may be required to achieve mission success, mission enhancement, or to repair or override failed systems.

In addition to the two basic classes of EVA, there are two other important characteristics of EVA tasks that are used to define design criteria and training requirements: criticality and complexity.

b. Criticality - An EVA task may be placed in one of three criticality categories:

1. Mission Enhancement - These are tasks that result in increased achievement of mission objectives. Usually tasks that get backed

2. Mission Success - Tasks that are required to achieve mission objectives.

3. Safety Critical - Tasks that must be accomplished to ensure the safety of the space module or the crewmembers.

c. Complexity - An EVA task may be classified in one of the three difficulty categories:

1. Simple EVA Tasks - that require use of standard tools, restraints, or mobility aids, and do not expose crewmembers to unique hazards.

2. Intermediate or Specialized EVA Tasks - Tasks that require additional tools or equipment, but are still procedurally simple.

3. Complex EVA Tasks - Tasks that require a significant extension of capabilities such as use of specialized tools, pose access (or restraint) problems, or require extended duration or unrestrained translation such as with a propulsion maneuvering unit.

d. Examples - Uses of EVA may include the following operations:

1. Support - Assembly, deployment, positioning, and mating/demating of large space structures.

2. Maintenance - Preventive and corrective maintenance such as Optical Surface Cleaning equipment positioning, inspection and replacement of equipment modules, activate/deactivate experiments, retrieve samples, resupply propellant or fluids, connect and disconnect utilities, and repair meteoroid or other damage.

3. Transfer - Transfer of cargo, equipment, and personnel, including the transfer of disabled crewmembers.

In a microgravity or reduced-gravity space environment, EVA crewmember capabilities relative to Earth-based, shirt- sleeve capabilities are improved for certain functions and degraded for others. The advantages of the microgravity environment allow the crewmember additional latitude during worksite operations, translation, and equipment transfer. The main factors that may degrade crewmember performance are pressure suit encumbrance, insufficient working volume, in- adequate crewmember restraint, and poor task or tool design.

There are no constraints imposed by sunlight/dark cycles, given proper considerations of space module/Sun angles and artificial illumination.

Space module equipment sensitive to EVA effluent discharge or particulate contamination should provide inherent self-protected features, or define EVA crewmember operational constraints.

14.1.2.1 EVA Compared to IVA and Alternative Approaches

{A}

14.1.2.1.1 Applications of EVA

{A}

The applications of EVA include:

a. Payload or mechanical override.

b. Maintenance and repositioning.

c. Extravehicular experimentation.

d. Payload, equipment, and personnel transfer.

e. Large space or planetary surface construction.

f. Satellite deployment and retrieval.

g. Servicing and repair.

h. Inspection.

14.1.2.1.2 Advantages of EVA

{A}

The advantages of EVA include:

a. Task flexibility at the worksite: the EVA crewmember can perform a very wide range of tasks.

b. Dexterous manipulation and one-handed or two-handed manipulation at the task site.

c. High-resolution visual interpretation of the task site.

d. Human cognitive and interpretive capability at the task site.

e. Decision-maker and effector are at the tasksite.

f. Crewmember at tasksite is capable of implementing real-time alternative and unique approaches to a problem.

14.1.2.1.3 Limitations of EVA

{A}

The limitations of EVA include:

a. Sensory degradation.

b. Limited duration.

c. Limited crewmember mobility and dexterity, force application, and endurance.

d. Operations time and resource overhead requirements.

e. Working volume and access limitations.

f. Hazards to the EVA crewmember.

14.1.2.1.4 Alternative Approaches to EVA

{A}

Sophisticated machine systems may relieve the EVA crewmember of routine and hazardous tasks as the technology for automation, teleoperation, and robotics evolves. Applications of robotics and teleoperation should be designed to achieve an optimum mix of human and machine resources, and substitute control as safety, productivity, and cost effectiveness warrant. Systems that employ machine applications should not be designed to preclude the use of EVA as backup.

The successful employment of alternatives to EVA is strongly dependent upon a foreknowledge of the worksite and tasks to be performed. For new and complex situations, EVA will remain the method of choice.

14.1.3 General EVA Safety Design Requirements

{A}

EVA crew safety shall be the paramount consideration in all EVA tasks.

The following EVA safety requirements are a compilation of general design features that shall be included in systems to ensure the safety of the crew and space module equipment.

(Refer to Section 6.0, Crew Safety, for additional safety requirements that pertain to EVA. In the event of conflict concerning EVA safety issues, Section 14.0 shall take precedence.)

The following safety requirements shall be followed to ensure the safety of the EVA crewmembers:

a. Temperatures - Surface temperatures of space module components requiring EVA interface shall be compatible with the touch-temperature limits of the pressure suit design being used.

b. Radiation - The EVA system design and operational procedures shall protect the EVA crewmember from radiation for the duration of the EVA exposure during the mission.

c. Micrometeoroids and Debris - EVA system design shall protect the EVA crewmember from expected particles including sand and dust.

d. Chemical Contamination - The EVA system shall protect the crewmember from hazardous chemical contamination.

e. Edges and Protrusions - All space module equipment and structures requiring an EVA interface must either be designed to preclude sharp edges or protrusions, or must be covered to protect the crewmember and the crewmember's critical support equipment.

f. Hazardous Equipment - Potentially hazardous items that could injure EVA crewmembers or damage EVA equipment by entrapment, snagging, tearing, puncturing, cutting, burning, or abrading shall be designed to ensure elimination of, or protection from, the hazard.

g. Ingress/Egress - EVA crewmembers shall always have a positive method and means to return to the pressurized module.

h. Power Sources - Special shielding and/or procedures shall be provided to preclude EVA approaches to a nuclear rector or radioisotopic generator power source located in the space module, that may result in additional radiation exposure.

i. Transmitters - Procedures shall be developed to protect crewmembers during EVA approaches that may result in harmful exposures to the non-ionizing radiation being emitted from all high-power electromagnetic EM wave transmitters (microwave, radar, laser, radio, UV/IR visible lamps) on or in the space module with exterior antennas or external apertures.

j. Tethers - EVA crewmembers shall be safety tethered to the space module at all times in microgravity, unless they are in a free-flying maneuvering unit or otherwise suitably restrained.

(Refer to Paragraph 14.4, EVA Workstations and Restraints, and Paragraph 11.7.2, Personnel Restraints, for other restraint design considerations and requirements).

k. Ignition Sources - Electrical current limiting devices shall be provided to eliminate all potential ignition sources within any oxygen-enriched atmosphere of the life support system and pressure suit.

l. Positive Pressure - Protection shall be provided to prevent rupture by overpressurization of the crewmember's pressure envelop due to failure of the pressure supply system.

m. Electrical Voltage - The EVA crewmember shall be protected against electric voltage shocks from inadvertent grounding of electric circuits and from electrical discharge resulting from static charge build-up.

14.1.4 Space Suit Electrical Hazards Reduction Design Example

{A}

The maximum electrical current allowed within the oxygen-enriched environment of the Apollo space suits, through the Shuttle EMU space suit design, was 0.5 amps at the maximum ground level operating pressure of 140 kPa (20 psia). Current limiting devices are required to be used in flight EVA systems and interfacing ground support equipment to eliminate electrical hazards. Test methods and data pertaining to this are described in NASA JSC STD 8080, number 130, and in CSD-A-518, "Study of the Apollo Spacesuit Electrical Fire Hazard".

14.2 EVA PHYSIOLOGY

{A}

14.2.1 Introduction

{A}

This section establishes guidelines for maintaining the EVA crewmembers' physiological well-being. It includes information that must be considered when designing EVA systems and planning EVA tasks. Topics covered are eye/hand coordination, tactile limits, reaction time, strength capabilities, workload, food and drinking water, body waste management, medical monitoring, and atmospheric conditions.

14.2.2 EVA Physiological Design Considerations

{A}

This section includes physiological design considerations in support of EVA.

14.2.2.1 EVA Vision Design Considerations

{A}

EVA vision is affected by variation in atmospheric attenuation, transmission of light through the helmet and visors, and visual display requirements.

(Refer to Paragraph 4.2.2, Vision Design Considerations for other considerations that pertain to vision.)

14.2.2.2 EVA Eye/Hand Coordination Design Considerations

{A}

Eye/hand coordination for the suited EVA crewmember is modified by the limits of the particular pressure suit.

(Refer to Paragraph 4.8, Coordination, for considerations that pertain to eye/hand coordination).

14.2.2.3 EVA Reaction Time Design Considerations

{A}

Sensory perception and reaction time are altered as a function of the stimuli in the space environment and the pressure suit encumbrances.

(Refer to Paragraph 4.7, Reaction Time, for considerations that pertain to general reaction time.)

14.2.2.4 EVA Strength-Related Design Considerations

{A}

The strength capabilities of the EVA crewmember are influenced by the pressure suit design as it affects body positions, as well as the positioning and restraint of the crewmember at the worksite location.

Strength data should be used as guidelines only, indicating trends and orders of magnitude of human force output. It should not be construed as valid for all groups. Muscle strength is situation-specific; it varies within the same person according to body position. Presently there is no single strength test in one position in which strength in other positions can be predicted. It is important to verify through simulations that the full range of potential EVA crews can perform the physical tasks required by the hardware design.

(Refer to Paragraph 4.9, Strength, for other considerations pertaining to strength).

14.2.2.5 EVA Workload Design Considerations

{A}

To minimize crew workload and maximize crew efficiency, planned EVAs should be conducted from a predetermined position by a restrained crewmember. In addition, training and task familiarization will also reduce workload.

(Refer to Paragraph 4.10, Workload, for other design considerations that pertain to workload).

14.2.2.6 EVA Food and Drinking Water Design Considerations

{A}

Sufficient food and drink for the total EVA duration should be provided for each EVA crewmember for all operations.

(Refer to Paragraph 7.2.2.2, Nutrition Design Considerations, and to Paragraph 10.5.2, Galley and Wardroom Design Considerations, for other considerations that pertain to nutrition, food, and water).

14.2.2.7 EVA Body Waste Management Design Considerations

{A}

The EVA waste management system should be user-acceptable, comfortable, and safe to use, without being attended, for the EVA duration.

Assuming that, through diet control and health maintenance, defecation is unlikely to occur while wearing the in-suit body waste management system, the system should accommodate urine for men, urine and menses for women, and should provide containment of defecation resulting from an episode of diarrhea.

The system should take a minimum amount of pre- and post-use stowage volume and servicing time.

During EVA, vomitus protection should be provided to protect the crewmember and keep the airway passage open, being unconstraining to the crewmember during normal EVA.

(Refer to Paragraph 10.3.2, Body Waste Management Facilities Design Considerations, for other considerations that pertain to body waste management).

14.2.2.8 EVA Medical Monitoring Design Considerations

{A}

EVA medical monitoring systems should be comfortable to the crewmember and not interfere with any EVA operations.

14.2.2.9 EVA Suit Pressure Design Considerations

{A}

An increased EVA suit pressure has the benefit of reducing or eliminating the prebreathe time required to denitrogenate the body to preclude the bends, and of giving ample margin between operating pressure and minimum emergency pressure.

A decreased suit pressure has the demonstrated benefit of reducing space suit operating forces, pressure loads, and structural bulk. In any given soft space suit design, lower pressure results in increased mobility.

Optimal cabin and suit pressure combinations should allow zero-prebreathe EVAs, preclude decompression sickness and effect minimal subsymptomatic bubble formation. Figure 14.2.2.9-1 presents several cabin-and suit -pressure combinations with an R value is the ratio of tissue nitrogen partial pressure to the final total pressure). Alternate pressures with a 30-minute pure oxygen prebreathe are also given. A higher R value of 1.4 is medically acceptable, but may result in a low incidence of decompression sickness.

R values above 1.4 should not be considered for nominal operations.

A suit pressure with an R value of 1.8 is acceptable for contingency purge flow operations of no longer than 30 minute duration. Contingency purge systems should provide 100% oxygen.

14.2.2.10 EVA Radiation Dosage Design Considerations

{A}

(Refer to Paragraph 5.7, Radiation, for other design considerations related to radiation exposure and protection design considerations).

a. Radiation Exposure Limits - Allowable limits for EVA radiation doses will depend on the radiation exposure limits set for the entire mission and the doses acquired during IVA (based preferably on active dosimetry measurements or measurements combined with the shielding capability of the space module). The maximum permissible EVA radiation exposure will be the difference between the mission limits and the IVA doses. A margin of safety should be included to accommodate unexpected radiation exposures during EVA.

b. Space Suit Radiation Protection - The space suit design, including visors, should be based on the conditions of the local radiation environment.

c. UV Light - The materials used for the space suit helmet and visors should provide adequate UV absorption characteristics to provide protection against direct and reflected UV light from the Sun. Protection against UV light should also be considered in EVAs that bring crewmembers near large solid-angle surfaces with high reflectivity in the UV range.

d. Solar Flares - Real-time monitoring and notification about solar activities will be necessary for regions of space where solar event radiation can reach the EVA crew-

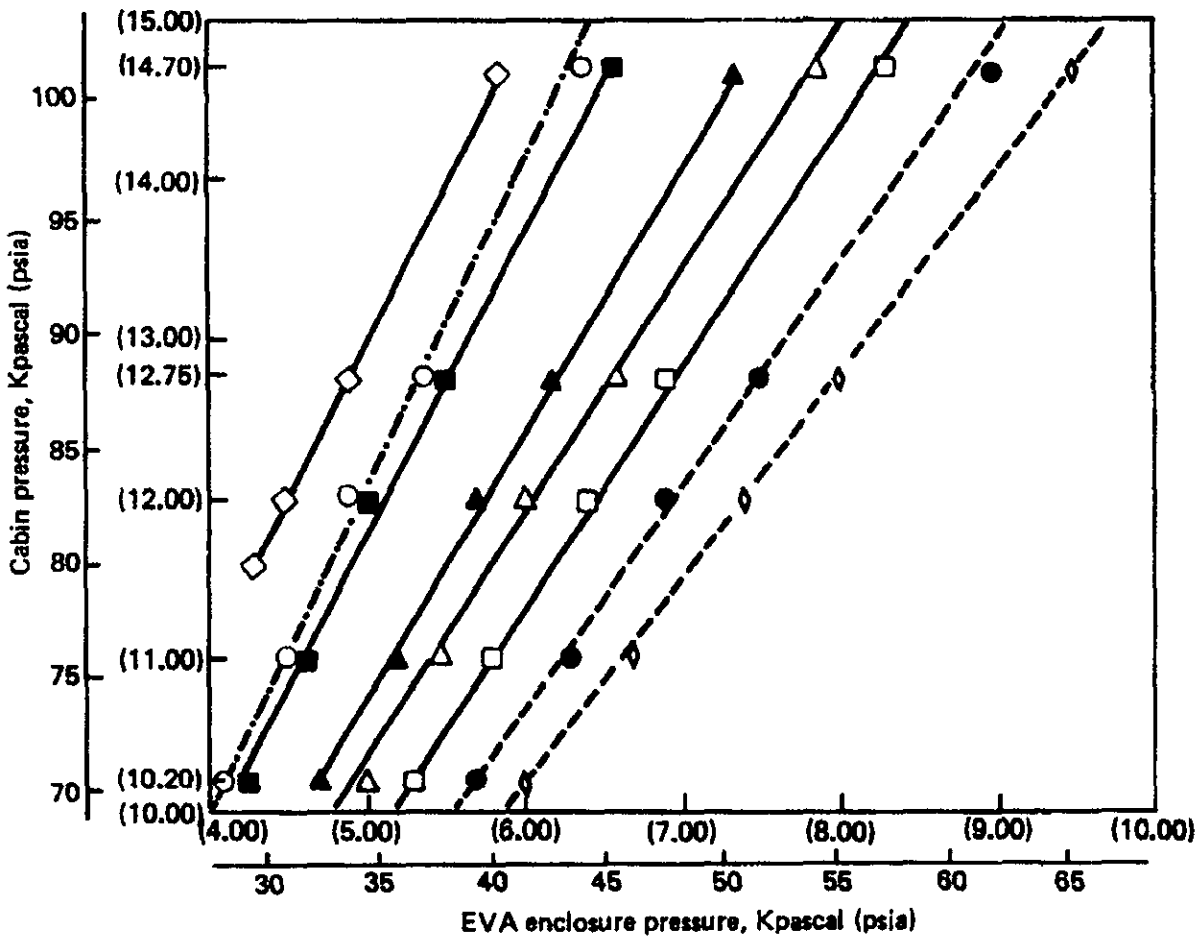

◊ R = 1.22, No O_2 prebreathe

● R = 1.22, 30 minutes O_2 prebreathe

□ R = 1.40, No O_2 prebreathe

△ R = 1.40, 30 minutes O_2 prebreathe

▲ R = 1.40, 1 hr O_2 prebreathe

■ R = 1.40, 2 hr O_2 prebreathe

◇ R = 1.40, 3 hr O_2 prebreathe

○ R = 1.80, For purge operation suit pressure, not to exceed 30 minutes exposure

	R = 1.22	R = 1.40
% Symptoms	0	5
% Bubbles	20	35
Maximum grade of bubbles *	2	4

* Bubble grades

0 - None

1 - Bubbles in less than 1/2 heart sounds

2 - Bubbles in more than 1/2 heart sounds

3 - Bubbles in each heart sound

4 - Bubbles obscuring heart sounds

Reference: 264, Figure 11.1

MSIS-298

Figure 14.2.2.9-1. Possible Space Module Pressures Versus EVA Enclosure Pressure

member because the onset of large solar flares may require aborting the EVA.

e. Polar Orbits - Auroral electron charging effects should be considered in the design of EVA systems when Polar orbit EVA operations are performed.

14.2.2.11 EVA Touch Temperature Considerations

{A}

Temperatures of items the crewmember will come in contact with during EVA will vary more widely than those acceptable for IVA.

Acceptable touch temperature is a function of the suit design configuration being used, contact pressure, heat transfer characteristics of the object, and duration.

Materials degradation caused by temperature extremes should be considered in establishing touch temperature requirements.

(Refer to Paragraph 6.5.2, Touch Temperature Design Considerations.)

14.2.3 EVA Physiological Design Requirements

{A}

This section includes design requirements for the physiological aspects of EVA.

14.2.3.1 EVA Vision Design Requirements

{A}

No requirements that apply only to EVA have been identified. Data pertaining to EVA requirements will be included in revisions to this document.

14.2.3.2 EVA Eye/hand Coordination Design Requirements

{A}

No requirements that apply only to EVA have been identified. Data pertaining to EVA requirements will be included in revisions to this document.

14.2.3.3 EVA Reaction Time Design Requirements

{A}

No requirements that apply only to EVA have been identified. Data pertaining to EVA requirements will be included in revisions to this document.

14.2.3.4 EVA Strength-Related Design Requirements

{A}

Design forces required for operation of hardware shall not exceed the capabilities of the potential population of EVA crewmembers within a given pressure suit design.

(Refer to Paragraph 4.9.3, Strength Design Requirements, for requirements that pertain to nude-body strength in one-g.)

14.2.3.5 EVA Metabolic Workload Design Requirements

{OP}

The EMU shall be able to support a mean metabolic rate of 250 kcal/hr (1000 Btu/hr) for 60 minutes, and a sustained minimum level of 65 kcal/hr (250 Btu/1hr).

14.2.3.6 EVA Food and Drinking Water Design Requirements

{OP}

Food and drinking water requirements are variable based on the frequency and length of scheduled EVAs:

a. Water requirements - Water shall be available during EVA at a rate 240 cc/hr (8 oz/hr) for EVA over 3 hours.

b. Food Requirements are as follows:

1. EVAs of 4 hours or less in duration may be managed with 200 kcal (795 Btu) of food.

2. EVAs of greater than 4 hours apart may be managed with 200 kcal (795 Btu) of food.

3. Single or multiple EVAs of 4 to 8 hours in aggregate and repeated at intervals less than 48 hours apart may be managed with 750 kcal (2975 Btu) of food.

c. Materials used shall meet the current FDA requirements that pertain to food and drinking water.

(Refer to Paragraph 7.2.2.3, Nutrition Design Requirements for data relative to portable water compatibility.)

14.2.3.7 EVA Body Waste Management Design Requirements

{A}

The EVA in-suit body waste management system shall provide for the collection and disposal of human wastes in an aesthetic and reliable manner that shall not degrade the crewmember performance. Specifically, the system design shall include the following:

a. Body Wastes to be Accommodated - accommodation o 1000 cc (33 oz) of urine for men and women, and menses for women.

b. Contamination Protection - prevention of odor, particles, biotic containers, and/or toxicants.

c. Duration of Accommodation - accommodation of body wastes for maximum suited duration.

d. Oral/Nasal Breathing Environment - Space suit systems in combination with EVA procedures shall provide for an in-helmet environment that provides protection from:

1. Defecation in the suit.

2. Vomiting in the suit.

3. Loose food or waste particles.

4. Free-floating liquids.

(Refer to Paragraph 10.3.3, Body Waste Management Facilities Design Requirements, for other information that pertains to body waste management.)

14.2.3.8 EVA Medical Monitoring Design Requirements

{A}

A real - time physiological monitoring capability shall be provided for each EVA crewmember to measure physiological parameters. The monitoring device shall provide:

a. Detection Capability - the capability to detect physiological stress and/or excess during EVA.

b. Mobility - minimally interfere with personnel mobility.

c. Checkout Time - require minimum checkout time.

d. Communications, Caution, and Warning - the capability for real-time downlink, as well as in-suit caution and warning alarms, and the provision of caution and warning alarms for intravehicular crewmember support..

(Refer to Paragraph 9.4.4.3, Caution and Warning System Design Requirements, for specific requirements.)

e. Monitor Parameters - parameters that shall be monitored include:

1. O2 consumption.

2. Heart rate and EKG signal.

3. Suit pressure.

4. In-suit partial pressure (for active two-gas life support systems designs).

5. CO2 partial pressure.

6. A physiological monitoring capability shall be provided for each EVA crewmember to measure radiation exposure in the suit either actively or passively depending on the radiation environment.

(Refer to paragraph 5.7.2.2.3, Ionizing Radiation Monitoring and Dosimetry Design Requirements, and Paragraph 5.7.2.2.4, Ionizing Radiation Personnel Protective Equipment Design Requirements, for other applicable requirements. Refer to Paragraph 6.4.3, Electrical Hazards Design Requirements, and Section 10.9, Space Medical Facilities, for information that pertains to EVA medical monitoring.)

14.2.3.9 EVA Suit Pressure Design Requirements

{A}

The following shall be required for EVA suit pressure design:

a. O2 Pressure - The O2 pressure in the space suit shall be maintained above the minimum normoxic levels shown in Figure 14.2.3.9-1.

b. O2 Partial Pressure Exposure - Exposure to O2 partial pressure during EVA preparation and during EVA shall be limited as a function of time due to O2 toxicity concern as shown in Figure 14.2.3.9-2.

c. High O2 Partial Pressure Exposure - Chronic (>6 hrs) exposure to O2 partial pressure above 310 mmHg (6.0 psi) will require crew health assessment with pulmonary function tests and laboratory tests.

d. CO2 Partial Pressure Exposure - The inspired CO2 (CO2 in the gas stream directed to the helmet plus the CO2 rebreathed from respiration) shall not exceed 7.6 mmHg (0.15 psi) at metabolic rates up to 400 kcal/hr (1600 Btu/hr). The inspired CO2 shall not exceed 10 mmHg (0.19 psi) for periods up to 15 minutes at metabolic up to 500 kcal (2000 Btu/hr), and shall not exceed 15 mmHg (0.29 psi) for periods of 5 minutes at metabolic rates up to 630 kcal/hr (2500 Btu/hr).

e. Rate of Pressure Change - The rate of pressure change experienced by the crew member during either normal depressurization or repressurization shall not exceed 2.6 mmHg/second (0.05 psi/second).

f. Rate of Emergency Repressurization - The rate of emergency repressurization shall not exceed 52 mmHg/second (1.0 psi/second) and shall not result in a crewmember peak differential pressure across the chest in excess of 80 mmHg (1.5 psi) or 40 mmHg (0.77 psi) for a period longer than 5 seconds.

14.2.3.10 EVA Radiation Dosage Design Requirements

{A}

(Refer to Paragraph 5.7.2.2, Ionizing Radiation Design Requirements, and Paragraph 5.7.3.2, Non-Ionizing Radiation Design Requirements, for other radiation dosage design requirements.)

a. Radiation Protection - Sufficient protection to keep radiation exposure below permissible EVA limits based on the maximum predicted radiation levels and the maximum expected task durations.

b. EVA Radiation Exposure limits shall be based on NASA exposure limits:

1. Mission exposure limits shall be set.

2. Based on the mission exposure and the radiation dose acquired during IVA, permissible EVA radiation exposure limits shall be set.

c. Non-ionizing Radiation Standards:

1. Using terrestrial exposure standards for non-ionizing radiation as a basis, exposure standards for non-ionizing radiation shall be established.

2. These standards shall be applied to protect EVA crewmembers from possible

Total pressure		Normoxic O_2 pressure	
Kpascal	(psi)	kPa	(psi)
25.51	3.70	25.51	3.70
27.58	4.00	24.96	3.62
34.47	5.00	23.79	3.45
41.37	6.00	23.17	3.36
48.26	7.00	22.68	3.29
55.16	8.00	22.34	3.24
62.05	9.00	22.06	3.20
68.95	10.00	21.86	3.17
101.35	14.70	21.24	3.08

MSIS-299

Reference: 264, Table 11.2

Figure 14.2.3.9-1. Normoxic O_2 Pressure as a Function of Total Pressure

O_2 partial pressure		Limitations
Range		Hours per period
Kpascal	(psi)	
69 - 101	(10 - 14.7)	6 hours/ 24 hour period 18 hours/120 hour period
41 - 69	(6 - 10.0)	18 hours/120 hour period
21 - 41	(3 - 6.0)	None

MSIS-300

Reference: 262, page 46

Figure 14.2.3.9-2. Exposure Limits to Partial Pressures During EVA Preparation

contact with high levels of non-ionizing radiation being emitted by exterior antennas or apertures.

d. UV Eye Protection - the design of the space suit helmet and visors shall provide adequate eye protection to the EVA crewmember from the Sun's direct and reflected UV radiation for the duration of EVA exposure.

14.2.3.11 EVA Touch Temperature and Pressure Design Requirements

{A}

EVA touch temperatures and pressures are as follows:

a. EVA Space Suit - The Space Station Extras Vehicular Mobility Unit (SSEMU) shall maintain space suit internal surface temperatures between 10 degrees C (50 degrees F) and 43 degrees C (110 degrees F).

b. EVA Glove - The EVA glove shall provide the above protection during the subsequent to the period that the external surface of the glove is loaded to 52 mmHg (1-0 psi) for 0.5 minute by an object with a surface temperatures between -120 degrees C (-185 degrees F) and 113 degrees C (+235 degrees F).

(Refer to Paragraph 6.5.3, Touch Temperature Design Requirements, for other specific requirements.)

14.2.4 Example EVA Physiological Design Solutions

{OP}

This section includes example design solutions used during STS missions for some physiological aspects of EVA. It should be noted that some of the existing designs do not meet all of the requirements of this standard.

14.2.4.1 EVA Body Waste Management Example Design Solutions

{OP}

For Shuttle EVAs, the problem of body waste management is solved by collecting liquid wastes in a disposable urethane-coated nylon bag as shown in Figure 14.2.4.1-1, UCD-Urine Collection Device, and worn by male crewmembers under LCNG. Female crewmembers wear a disposable containment trunk, which collects liquid wastes in a super-absorbent material. This trunk is shown in Figure 14.2.4.1-2, Disposable Absorption Containment Trunk (DACT).

14.2.4.2 EVA Food and Drinking Water Example Design Solution

{OP}

For Shuttle EVAs, drinking water is obtained from the in suit drink bag IDB. The IDB is a urethane film bag RF heat sealed together in the shape of the volume available in the front of the HUT. The bag contains a valve that is activated by a sucking motion so the crewmember obtains a drink as if using a straw. The valve precludes spillage caused by pressing on the bag. The bag is attached by Velcro into the front of the HUT, so the drink tube is easily available.

A food stick is next to the IDB on the JUT. The food stick is an edible paper sheath that allows the crewmember to grip it with his/her teeth, pull it up, and take a bite. The IDB is shown in Figure 14.2.4.2-1.

14.2.4.3 EVA Example Medical Monitoring Design Solutions

{A}

The STS EMU contains an Operational Bio-instrumentation System OBS that consists of three chest electrodes, a signal conditioner, and connecting cables. It provides an EKG signal during EVA.

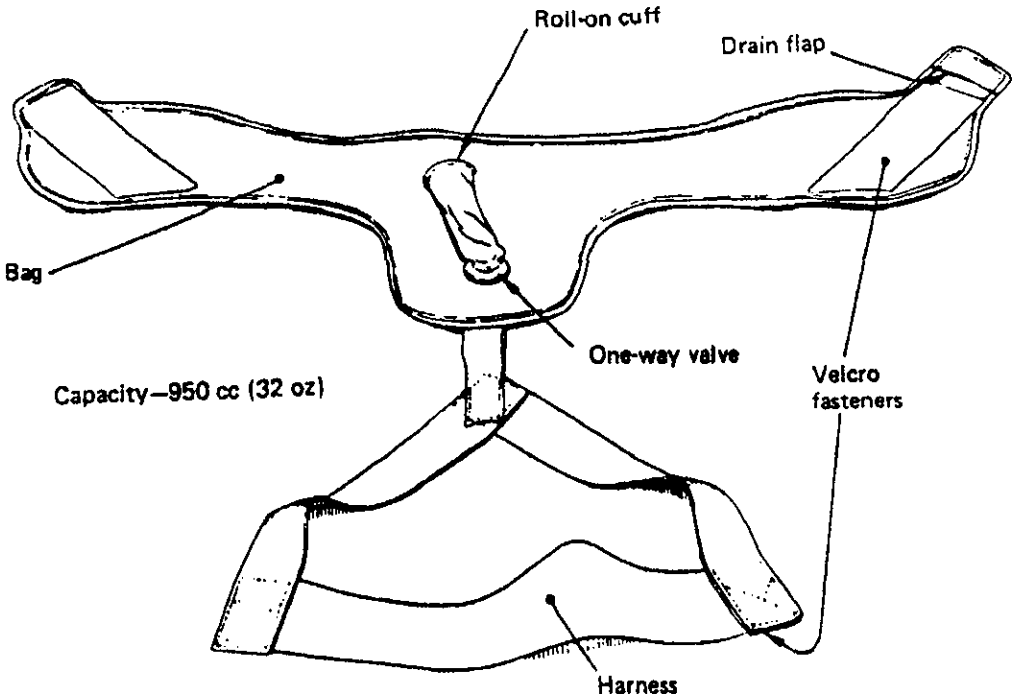

MSIS-301

Reference: 351

Figure 14.2.4.1-1. Urine Collection Device (UCD) as an Example of a Body Waste Management System for Males During EVA

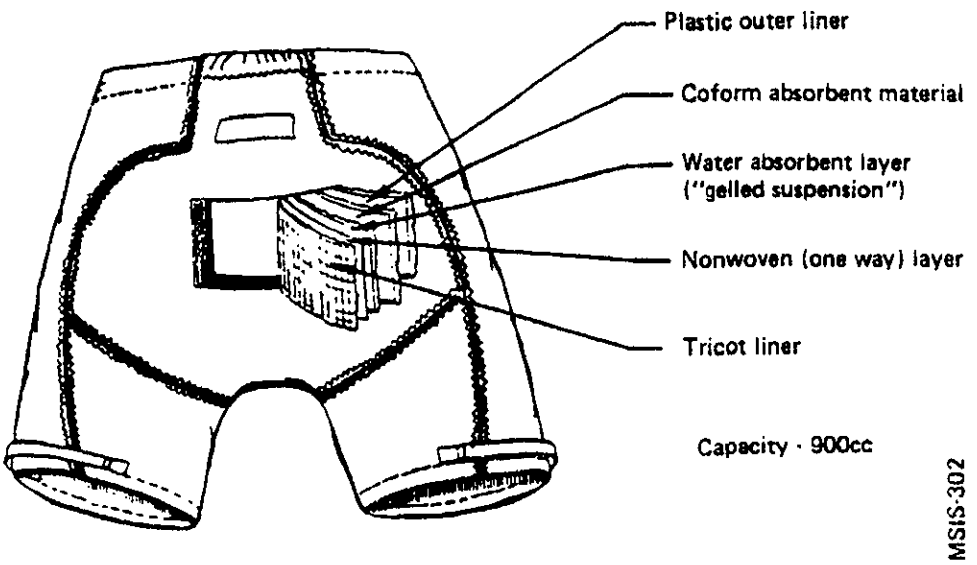

MSIS-302

Reference: 320

Figure 14.2.4.1-2. The Disposable Absorbtion Containment Trunk (DACT) as an Example of a Body Waste Management System for Females During EVA

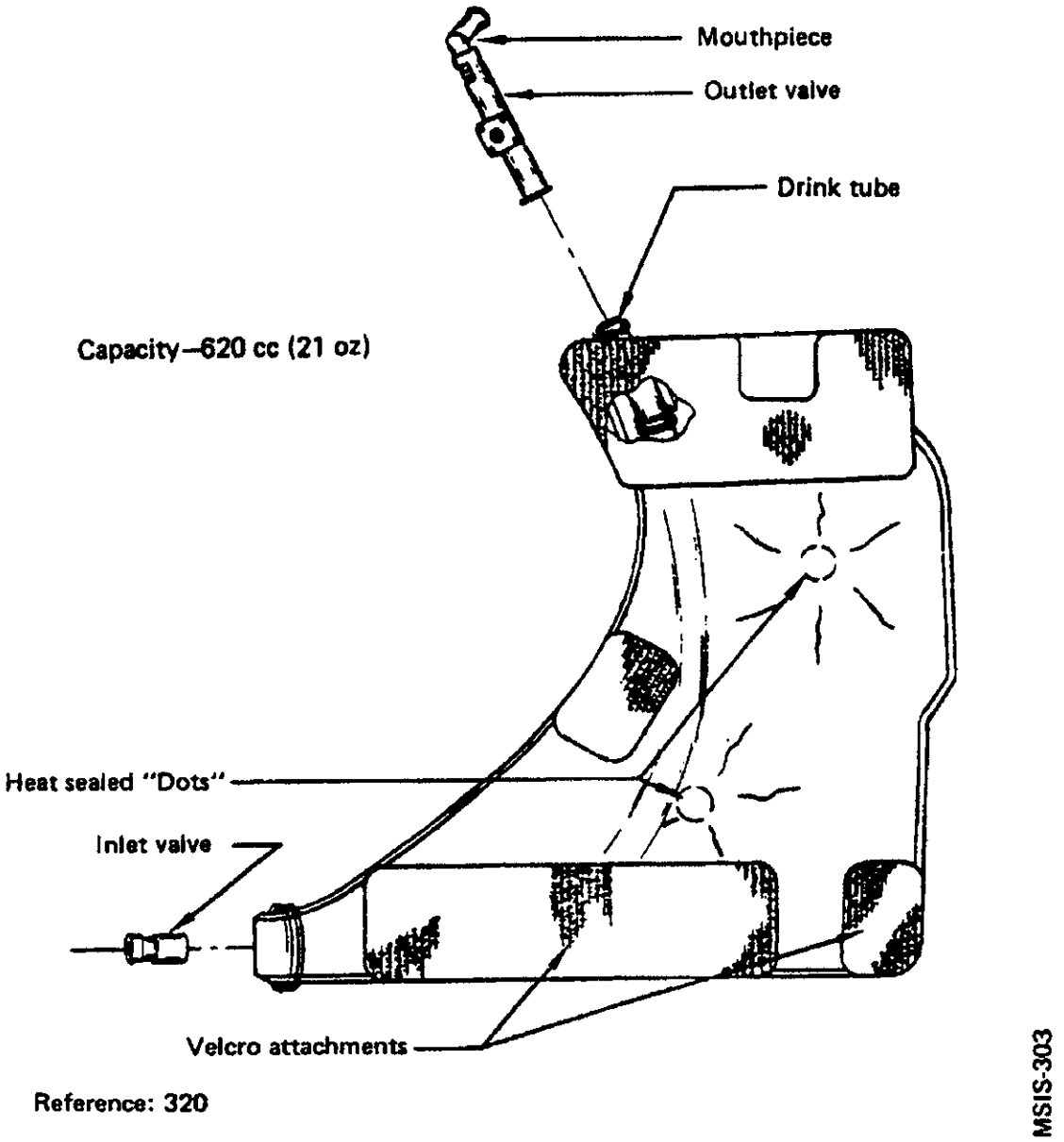

Figure 14.2.4.2-1. EVA Insuit Drink Bag as an Example of a Way to Provide Water to the EVA Crewmember

14.2.4.4 EVA Radiation Dosage Example Design Solutions

{A}

In an attempt to reduce microwave radiation exposure during STS EVAs, a mission rule requires that nearby antennas be turned off during EVA.

14.2.4.5 EVA Glove Example Design Solutions

{A}

The STS EMU glove design maintains the crewmen's skin temperature between 10 and 38 degrees C (50 and 100 degrees F) when the external surface of the glove is loaded to 6.89 kp (1.0 psi for 0.5 minute by an object with a surface temperature between -118 and 113 degrees C(-180 and +235 degrees F).

The Glove Thermal Micrometeoroid Garment TMG has a varying cross section to optimize hand mobility, abrasion resistance, and to provide thermal protection. The five different cross sectional areas are (1) Finger Tip, (2) Finger Back, (3) Finger Front, (4) Palm, and (5) Gauntlet. The Glove thermal garment is illustrated in Figure 14.2.4.5-1.

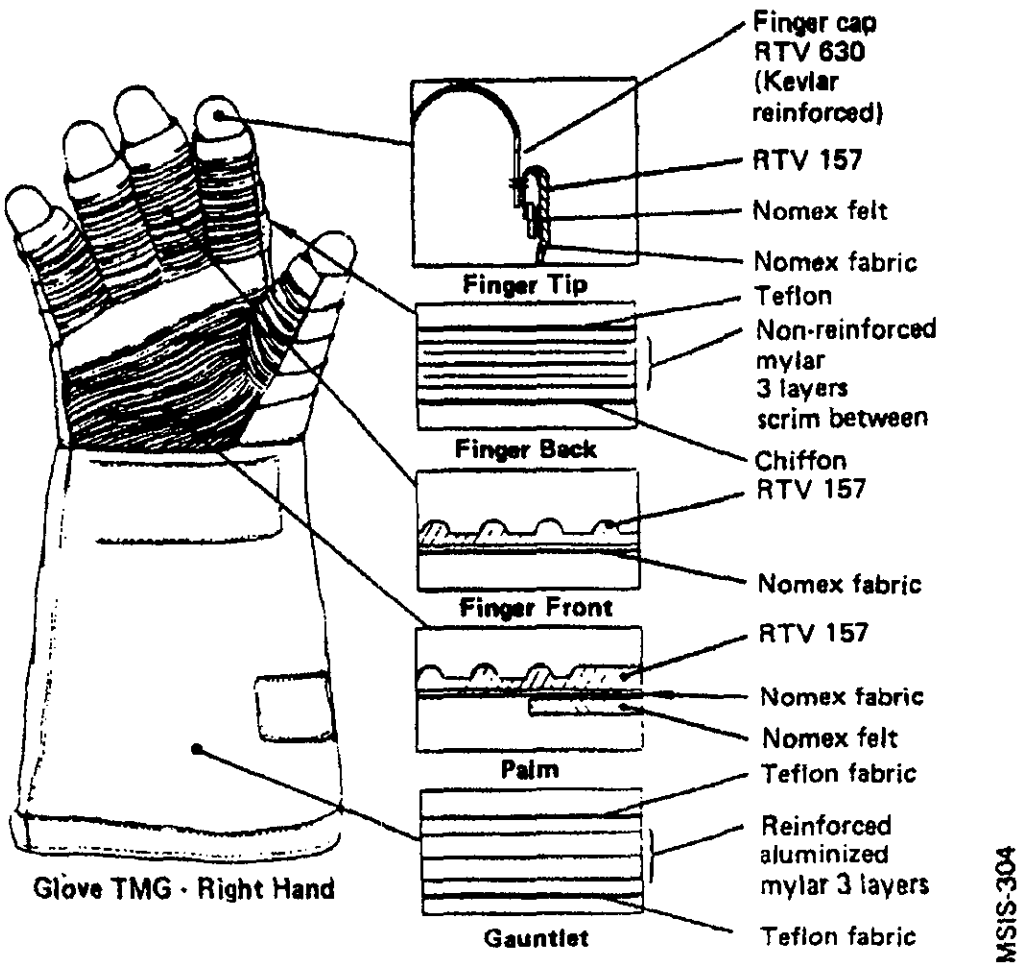

Reference: 320

Figure 14.2.4.5-1. Shuttle EVA Glove as a Touch Temperature Design Solution

The Finger Tip lay-up has four different materials. These materials are shown in cross section in the adjacent figure. The RTV 157 is an outer coating used for abrasion resistance. The Nomex Fabric is a very strong, durable fabric that adheres to the RTV. The Nomex Felt is used primarily for thermal protection and secondly for abrasion protection. And, finally, the finger cap RTV 630 is used to enhance the crewmember's fingertip, tactility, while providing protection.

The Finger Back lay-up has four different materials. The Teflon provides abrasion and thermal protection, while the Mylar reflects the Sun's radiation. The scrim between each of the three layers of Mylar provides insulation the same way double-pane windows do. The chiffon material protects the Mylar from abrading against the glove restraint.

The Finger Front is coated with RTV 157 to enhance gripping and tactility, as well as provide the thermal resistance. Again, the Nomex fabric is used because of its excellent wear and adhesion properties.

The Palm cross section shows three materials. Again, the RTV 157 is used for abrasion resistance and tactility. The Nomex felt serves as thermal protection. The felt reduces the heat transfer across the TMG while also providing abrasion resistance against the glove restraint.

The final area of cross section analysis is the Gauntlet. The cross section has two materials. The reinforced Mylar serves the same purpose as in the Finger Back, but is reinforced for greater durability. The Teflon provides abrasion resistance and protection.

14.3 EVA Anthropometry
{A}

14.3.1 Introduction
{A}

The anthropometric design considerations and dimensions for EVA crewmembers are discussed in this section. These include joint motion, movement ranges, neutral body posture, head movement, viewing limits, and working envelopes as well as pressure suit dimensions and design considerations.

(Refer to Paragraph 3.0, Anthropometry and Biomechanics, for size, reach, and mobility of the nude or lightly clothed crewmember).

14.3.2 EVA Anthropometric Design Considerations
{A}

The anthropometric ranges and the mobility restrictions imposed by any pressurized space suit must be considered during space systems design.

Basic anthropometric dimensions are normally given for nude or "shirt sleeve" conditions. In an EVA situation is altered due to the effective size of the crewmember pressure suits and life support equipment. Such clothing and equipment significantly affect the range of joint movement and influence the design layout of workspaces.

Anthropometric data that should be considered in hardware design include:

a. suited anthropometric data on the smallest female and the largest male EVA crewmember.

b. Human growth projections for the anticipated period through which the space suit will be in use.

(Refer to Paragraph 3.2, General Anthropometric and Biomechanics Related Design Considerations, for other considerations which pertain to anthropometrics.)

14.3.2.1 Space Suit Design Considerations and Dimensions

{A}

The space suit is a complete anthropomorphic system that provides pressure, ventilation, humidity and thermal control. and communication for the crewmember during EVA.

Design considerations and goals for the space suit should include:

a. Mobility - Space suit mobility that approaches that of the nude body ranges.

b. Sizing - Resizing capability among crewmembers should provided to minimize suit quantity and stowage volume required. Finger/thumb, arm, let, and torso length adjustment capabilities should be provided for individual crewmember mobility and comfort.

c. Environmental Protection - Space suit insulative lay-up provides environmental protection and effects bulk, volume and mobility ranges of the EMU.

d. Glove Dexterity - Space suit gloved hand dexterity that approaches that of bare-hand operations.

e. Dynamic Loading - Design load values of the structure of the pressure restraints and a consideration in space suit design. The pressurized components of the suit can adequately be modeled as thin shells under pressure to determine pressure loads. In the case of longitudinal or axial loads, the loads induced by the crewmember's interaction with the suit should be accounted for as they are often larger than the pressure loads. These loads are additive to the pressure loads that act in the axial direction. Crew induced loads on the suit depend on the suit architecture and the suit/crewmember fit. The stiffness of the axial loads distribution paths is the prime factor in making crewmember induced loads suit specific.

f. Controls and Displays - Suit mounted controls and displays should be selected and located in consideration of operational, visual, and volumetric constraints.

14.3.2.1.1 Space Suit Glove Design Considerations and Dimensions

{A}

Space suit gloves degrade tactile proficiency compared to bare hand operations. Dexterity can be compared to that of heavy work gloves, many standard handles, knobs, toggle switches and buttons can be operated with EVA gloves. Attention should be given to the design of manual interfaces to preclude or minimize hand fatigue or physical discomfort.

The space suit glove assemblies should be designed to allow the hand to function with a minimum of mobility restrictions, while satisfying contact temperature and grasp retention and force requirements. The pressurized gloves should be capable of being worn for extended periods of time without undue discomfort. The gloves should also allow firm grasp retention of handholds, switches, tools, etc.., for short periods of time without hand fatigue.

The general design consideration for the space suit gloves is to combine comfortable use with protection from workplace hazards, while permitting the full range of EVA tasks.

14.3.2.1.2 Space Suit Boot Design Considerations and Dimensions

{A}

Space Suit boots can be categorized into two types: microgravity and macrogravity. For microgravity applications, the unique function of the boot is to interface with an EVA foot restraint.

A current design example is given in Paragraph 14.3.4.2. For macrogravity applications, the boot should be designed to allow the foot to function with minimum of mobility restrictions to support walking, hopping, weight-bearing tasks, etc., while also providing protection from temperature extremes and abrasion hazards from the surface of the environmental terrain.

14.3.2.1.3 Space Suit Helmet Design Considerations and Dimensions

{A}

Data for this Paragraph will be included in revisions to this document. Current design examples are given in Paragraph 14.3.4.4.

14.3.2.2 Space Suit Joint Motions Design Considerations

{A}

Data for this Paragraph will be included in revisions to this document. Current design examples are described in Paragraph 14.3.4.3.

14.3.2.3 EVA Movement Ranges

{A}

Reach is a function of the anthropometry of the crewmember and the space suit design. The overall reach envelope of a suited crewmember varies according to the nature of the restraint and the requirement for one-or-two handed operation at the reach limit.

The optimum area for one--or-two handed operation is centered about the upper chest and lower face area of the crewmember.

Refer to Paragraph 3.3.3, Reach, for information on reach envelopes for nude or lightly clothed crewmembers.

14.3.2.3.1 Functional Data Design Requirements

{A}

a. Equipment and controls required to perform EVA tasks shall be located within the reach limits of the EVA crewmembers as shown in Figure 14.3.2.3.1-1.

b. Equipment, controls, displays and markings required to be seen to perform EVA tasks shall be located within the field-of-view of the EMU as shown in Figure 14.3.2.3.1-2

c. Equipment and structures requiring EVA interfaces shall maintain minimum clearance envelopes of 20 cm (89 in) high by 27 cm (10.5 in) wide with maximum depth of 46 cm (18 in) for gloved hand access as shown in Figure 14.3.2.3.1-3.

d. A work volume of 43" diameter shall be maintained to preclude entrapment of the suited crewman in the surrounding structure.

14.3.2.4 EVA Neutral Body Posture

{O}

The EVA crewmember in a microgravity environment assumes a position dependent upon the space suit configuration. This body position might be different from the shirtsleeve (or nude) microgravity neutral body posture.

The space suit/crewmember neutral body position should be used when designing workstations, panels, and controls for microgravity use.

When designing, microgravity restraints for long duration, the space suit/EVA neutral body position should be used.

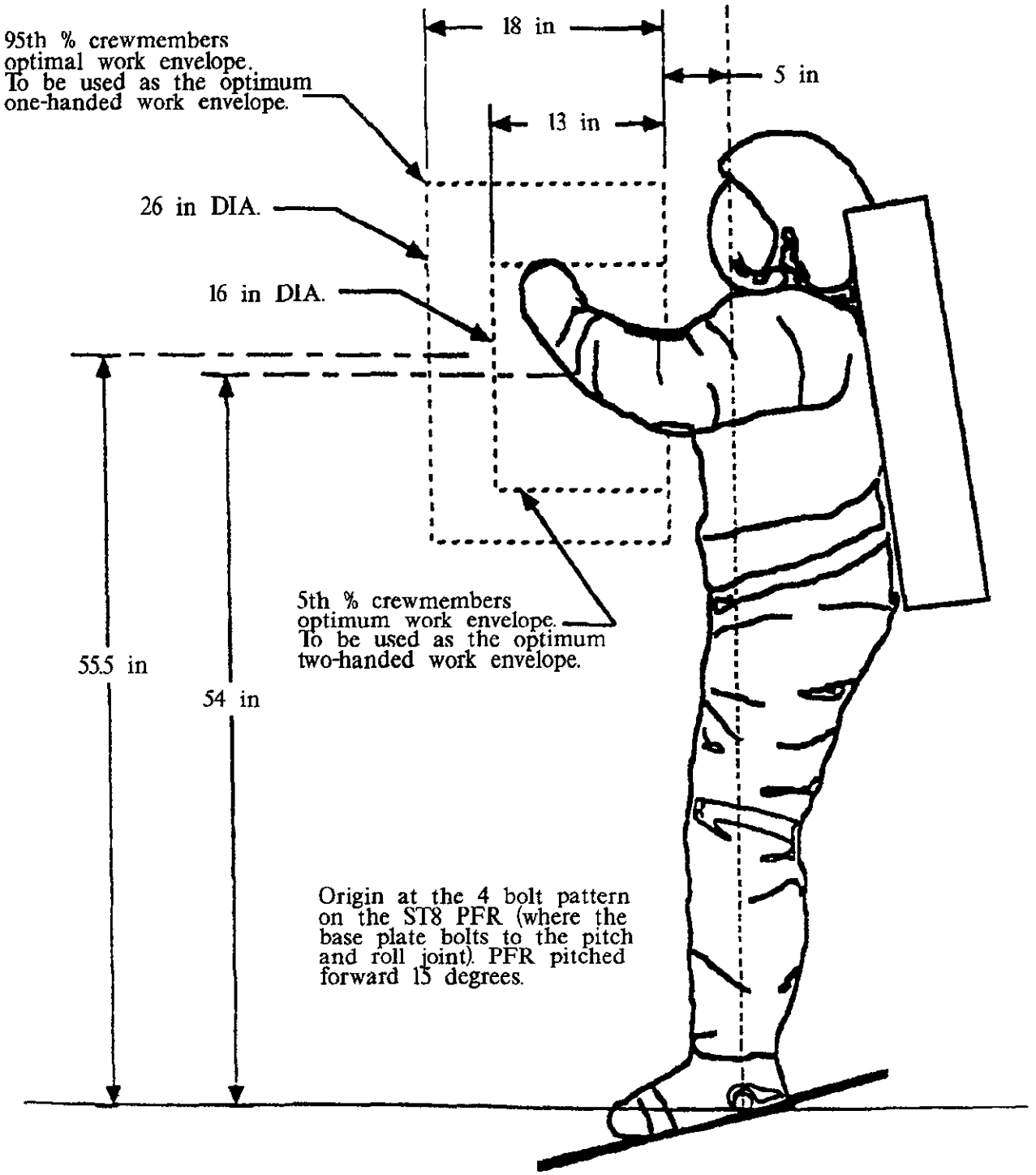

Reference: Derived from NSTS 07700, VolumeXIV Appendix 7, Page 1.5-3

MSIS500 Rev. B

Figure 14.3.2.3.1-1 Crewmember Optimum Work Envelope

Field Of View With Extravehicular Visor Assembly (EVVA) Attached

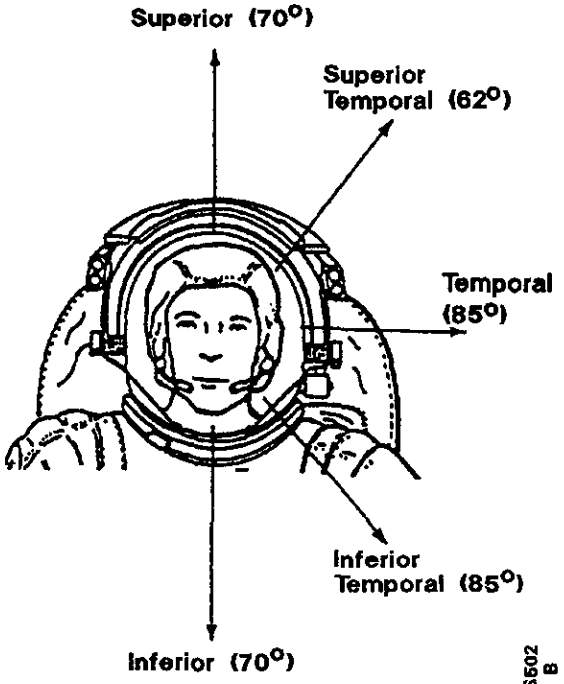

MSIS502 Rev. B

Figure 14.3.2.3.1-2 Crewmember Field of View

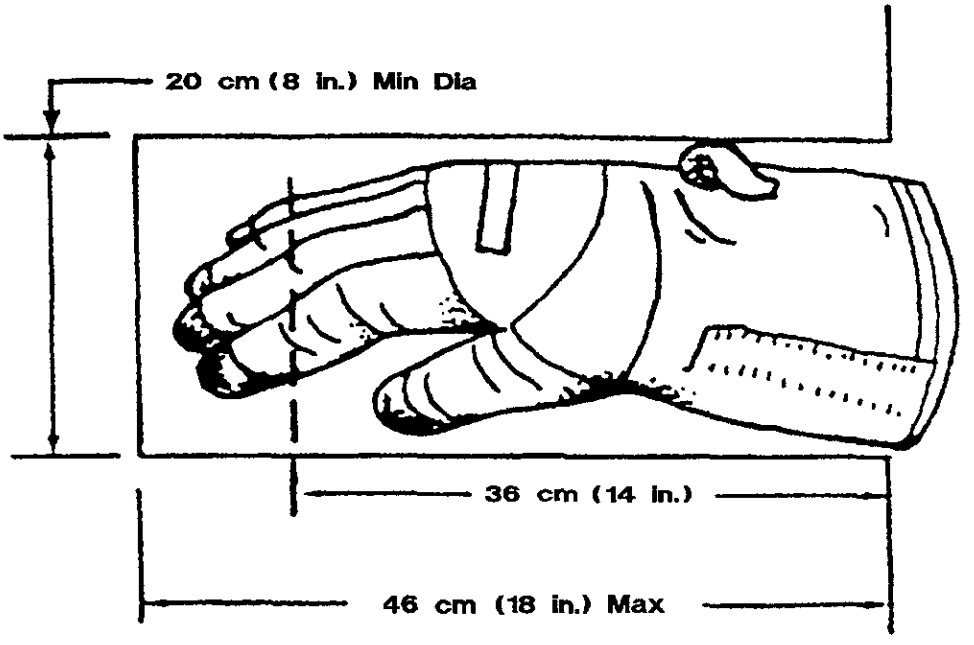

MSIS517 Rev. B

Figure 14.3.2.3.1-3 Work Envelope For Gloved Hand

Excursions outside the neutral body posture are acceptable for short periods of time, but prolonged deviation, combined with strenuous tasks, should be avoided.

(Refer to Paragraph 3.3.4, Neutral Body Posture, for additional information on the microgravity neutral body posture.)

14.3.2.5 EVA Working Envelopes

{A}

The space suit dimensional envelope will play an important role for any task requiring the crewmember to enter into an opening as bight be required during space construction tasks or servicing of large space modules.

The following guidelines define crewmember work envelopes for translation, body entrance, gloved hand clearance , etc., and should be considered minimum design limits.

a. Minimum Working Envelope - a minimum working envelope of 20 cm (8 in.) diameter by 36 cm (14 in.) deep has been established for the EVA glove. This volume will allow a gloved hand to manipulate most hand-operated controls such as latches switches, buttons, and knobs. See Figure 14.3.2.3.1-3.

b. Gloved-Hand Clearance - When gloved-hand clearance is required adjacent to ORUs, the following dimensions should be incorporated into the design. Clearance between ORUs, ORU/structures, ORU/Cable, etc., should be at least 20 cm (8 in.) high, no more than 46 cm (18 in.) deep, and 27 cm (10.5 in.) wide.

c. Tool Access - Consideration should be given to the following guidelines:

1. When only tool access is required, a 2.5 cm (1.0 in) minimum clearance should be provided around the fastener or drive stud for insertion, actuation, and removal of the drive end of the tool.

2. A minimum of 7.6 cm (3.0 in) should be provided for clearance between a tool handle engaged on a fastener or drive stud and the nearest piece of hardware. The tool handle should be able to maintain this clearance through a full 180 degree swept envelope.

d. Extensive Manipulation - EVA tasks that involve extensive body and arm manipulation will require a sufficient working envelope. The exact size will depend on the space suit and the type of task performed.

(Refer to Paragraph 12.3.1.2, Physical Accessibility, and Paragraph 8.6.3.2, Crew Station Body Envelopes, and Paragraph 11.2.3.6, Tool Access Design Requirements, for other information that pertains to working envelopes.)

14.3.2.6 EVA Head Movement and Viewing Limits

{A}

A crewmember in a space suit has a restricted vision cone due to limitations imposed by the suit, helmet, and visor assembly. For this reason, care must be taken in locating equipment at the workstations and along the translation routes to ensure that all critical hardware are easily seen.

(Refer to Paragraph 9.2.4, Human/Workstation Configuration, for additional information pertaining to viewing limits).

14.3.2.7 EVA Space Suit Measurement Considerations

{A}

Two major approaches have been used in the development and manufacture of space suits. The first approach, used prior to STS, was to use the particular body measurements of each crewmember to build special individualized suits. This resulted in a requirement for a large quantity of suits, the uses of which were limited to a single crewmember.

The second approach, employed for STS EMU's was to use a standard sizing system to accommodate a large number of EVA crewmembers. Individual space suits were made up form a stocked inventory of space suit component parts and assembled to accommodate the anthropometry and comfort of each crewmember. One training and one flight custom-fitted suit was made for each crewmember.

Space suit measurement approaches should consider providing the widest range of space suit components to accommodate the fullest range of potential users with the smallest required inventory of components.

14.3.3 EVA Anthropometry Design Requirements

{A}

The anthropometric data for EVA crewmembers are provided in this section. These include joint motion, movement ranges, neutral body posture, and working envelopes as well as pressure suit dimensions. These data will be used as appropriate to achieve effective integration of the EVA crew and systems.

14.3.4 Example EVA Anthropometric Design Solutions

{A}

This section provides anthropometric dimensions for EVA crewmembers using data from the STS program.

14.3.4.1 STS EMU Dimensions

{A}

The overall spacesuit dimensions for the STS EMU are shown in Figure 14.3.4.1-1. Selected measures which determine STS EMU sizing requirements are shown in Figures 14.3.4.1-2 a, b, and c. There are 12 standard functions of ingress and egress or attachment by the body measurements and 28 nonstandard anthropometrics used in spacesuit sizing. The 28 nonstandard measures are shown in Figure 14.3.4.1-3.

14.3.4.2 STS EMU Boot Dimensions

{A}

The STS EMU boot heel dimensions are provided in Figure 14.3.4.2-1.

14.3.4.3 Example Pressure Suit Joint Mobility

{A}

The STS EMU provides suit mobility motions of nearly 85% nude body range capability pressurized at 30 kp (4.3 psia) plus or minus 0.7 kPa (0.1 psia).

Mobility capability specifications of the STS EMU are shown in Figures 14.3.4.3-1 and 14.3.4.3-2

14.3.4.4 STS EVA Helmet Visual Range

{A}

The STS EMU helmet-visor system provides a minimum unrestricted field-of-view (body-fixed) of 120° left and 120° right in the horizontal plane. In the vertical plane, 105° down and 90° up visibility is provided. The EMU visor allows the crewmember to view the EMU boots during EVA workstation and restraint ingress.

STS EVA helmet visual range limitations are presented in Figure 14.3.4.4-1, and EMU field-of-vision is illustrated in Figure 14.3.4.4-2.

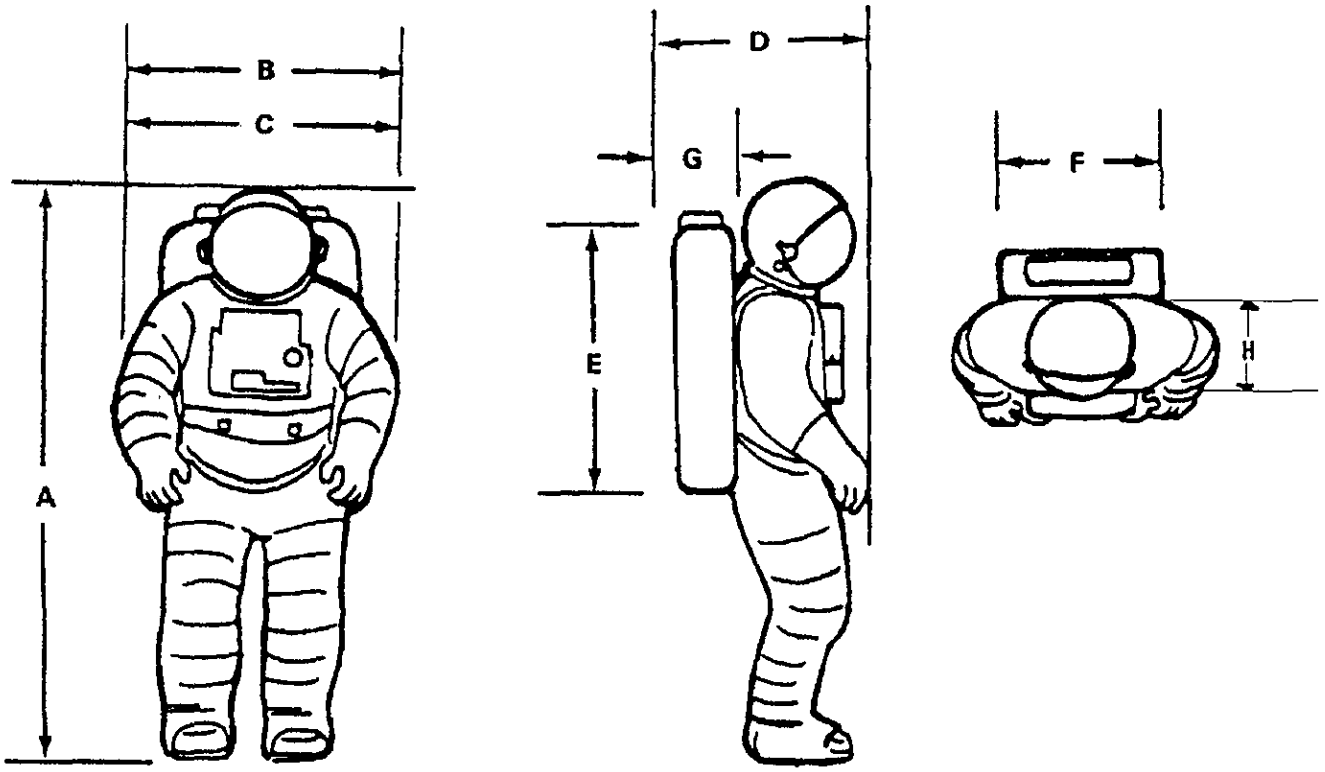

Size range		
	5th Percentile Female	95th Percentile Male
A - Height	171.5 cm (67.5 in)	191.8 cm (75.5 in)
B - Maximum breadth at elbows (arms relaxed)	— —	84.8 cm (33.4 in)
C - Maximum breadth at elbows (arms at side)	— —	66.0 cm (26.0 in)
D - Maximum depth with PLSS/SOP	66.0 cm (26.0 in)	68.6 cm (27.0 in)
E - PLSS height	81.3 cm (32.0 in)	
F - PLSS breadth	58.4 cm (23.0 in)	
G - PLSS depth	17.8 cm (7.0 in)	
H - PLSS to DCM distance (maximum)	52.8 cm (20.77 in)	

PLSS - Primary life support system
SOP - Secondary oxygen pack
DCM - Display and Control Module
Reference; 145, page E-24
351

MSIS-306
REV A

Figure 14.3.4.1-1. STS EMU Gross Dimensions (1985 Data for 5th Percentile U.S. Female and 95th Percentile U.S. Male)

a. Number	Body measurement	Measurement application
Hard upper torso (HUT)		
122	Bideltoid breadth	Shoulder clearance for donning.
233	Chest breadth	Width clearance at Scye bearings.
230	Chest circumference	Chest circumference clearance.
427	Head breadth	Head to scye bearing clearance for donning.
441	Head length	Front to rear head clearance for donning.
747	Shoulder circumference	Shoulder easement for arm-to-hut interface.
SSA 01	Expanded chest depth	Chest depth clearance and easement.
Note: HUT size and selection is of significant importance since it determines the required arm scye opening orientation the LTA body seal entry closure circumferences and the waist length required		
Lower torso assembly (LTA)		
249	Crotch height	Leg length and upper and lower length insert size adjustment.
457	Hip breadth	Waist bearing circumference.
873	Tibiale height	Position of knee in joint.
SSA 02	Vertical trunk diameter	Crotch easement.
SSA 03	Mid shoulder height standing	Leg length insert size adjustment.
SSA 04	Shoe size	Boot and boot insert sizes.
Liquid cooling ventilation garment (LCVG)		
249	Crotch height	Leg length easement.
747	Shoulder circumference	Trunk easement.
916	Vertical trunk circumference	Leg vent duct length insert size.
SSA 02	Vertical trunk diameter	Leg vent duct length insert size.
SSA 04	Shoe size	Boot and leg vent duct insert size.
SSA 05	Forearm circumference	Arm vent duct height profile.
SSA 06	Inter-wrist	Arm vent duct length size adjustment.
Arm assembly		
Arm Scye bearing and upper arm bearing circumferences are determined by the selected HUT size. Lower arm length and HUT/arm assembly sizes are determined by the following:		
SSA 07	Inter-elbow	Position of elbow in joint.
SSA 08	Inter-fingertip	Lower arm length and arm length insert size adjustment
EV gloves		
416	Hand circumference	Standard size glove selection.
420	Hand length	Standard size glove selection.
SSA 09 through SSA 28 (see below)		Hand measurements are used for crewmembers requiring custom size gloves.
SSA 09	Thumb, first knuckle circumference	
SSA 10	Thumb, second knuckle circumference	
SSA 11	Thumb length	
SSA 12	Index finger tip to thumb crotch	
SSA 13	Index metacarpal knuckle to thumb crotch	
SSA 14	Index finger first knuckle circumference	

Reference: 351

Note: Measurement data - the number adjacent to each of the body measurements are reference codes. Except for the unique SSAXX numbers, the codes are in Volume II of Reference 16. Reference 16, Volume II, provides additional data for these measurements plus an explanation of the measurement technique.

Figure 14.3.4.1-2. Shuttle Space Suit Anthropometry and Body Measurements

MSIS-307
1 of 2
REV A

b. Number	Body measurement	Measurement application
EV gloves (continued)		
SSA 15	Index finger second knuckle circumference	
SSA 16	Index finger tip to index finger crotch	
SSA 17	Middle finger tip to index finger crotch	
SSA 18	Middle finger first knuckle circumference	
SSA 19	Middle finger second knuckle circumference	
SSA 20	Middle finger tip to ring finger crotch	
SSA 21	Ring finger tip to ring finger crotch	
SSA 22	Ring finger first knuckle circumference	
SSA 23	Ring finger second knuckle circumference	
SSA 24	Ring finger tip to little finger crotch	
SSA 25	Little finger tip to little finger crotch	
SSA 26	Little finger first knuckle circumference	
SSA 27	Little finger second knuckle circumference	
SSA 28	Hand width at metacarpal knuckles	

c. Number	Body measurement	Minimum Cm (inches)	Maximum Cm (inches
122	Bideltoid breadth	40.31 (15.87)	58.19 (22.91)
223	Chest breadth	26.80 (10.55)	42.19 (16.61)
230	Chest circumference	85.01 (33.47)	114.91 (45.24)
249	Crotch height	71.91 (28.31)	91.21 (35.91)
416	Hand circumference	19.02 (7.49)	24.51 (9.65)
420	Hand length	16.51 (6.50)	21.59 (8.50)
427	Head breadth	14.20 (5.59)	17.91 (7.05)
441	Head length	18.49 (7.28)	22.63 (8.91)
457	Hip breadth	31.60 (12.44)	41.58 (16.37)
747	Shoulder circumference	93.29 (36.73)	132.00 (51.97)
805	Stature	163.50 (64.37)	188.70 (74.29)
873	Tibiale height	42.90 (16.89)	56.90 (22.40)
916	Vertical trunk circumference	152.50 (60.00)	195.91 (77.13)
SSA 01	Expanded chest depth	23.11 (9.10)	28.80 (11.34)
SSA 02	Vertical trunk diameter	59.79 (23.54)	77.50 (30.51)
SSA 03	Mid shoulder height (standing)	135.81 (53.47)	160.40 (63.15)
SSA 04	Shoe size	16.51 (6-1/2)	33.02 (13.00)
SSA 05	Forearm circumference	18.01 (7.09)	32.26 (12.70)
SSA 06	Inter-wrist	124.69 (49.09)	155.30 (61.14)
SSA 07	Inter-elbow	79.20 (31.18)	104.50 (41.14)
SSA 08	Inter-finger tip (span)	157.81 (62.13)	195.58 (77.00)

Reference: 351

MSIS-307

Figure 14.3.4.1-2. Shuttle Space Suit Anthropometry and Body Measurements (Continued)

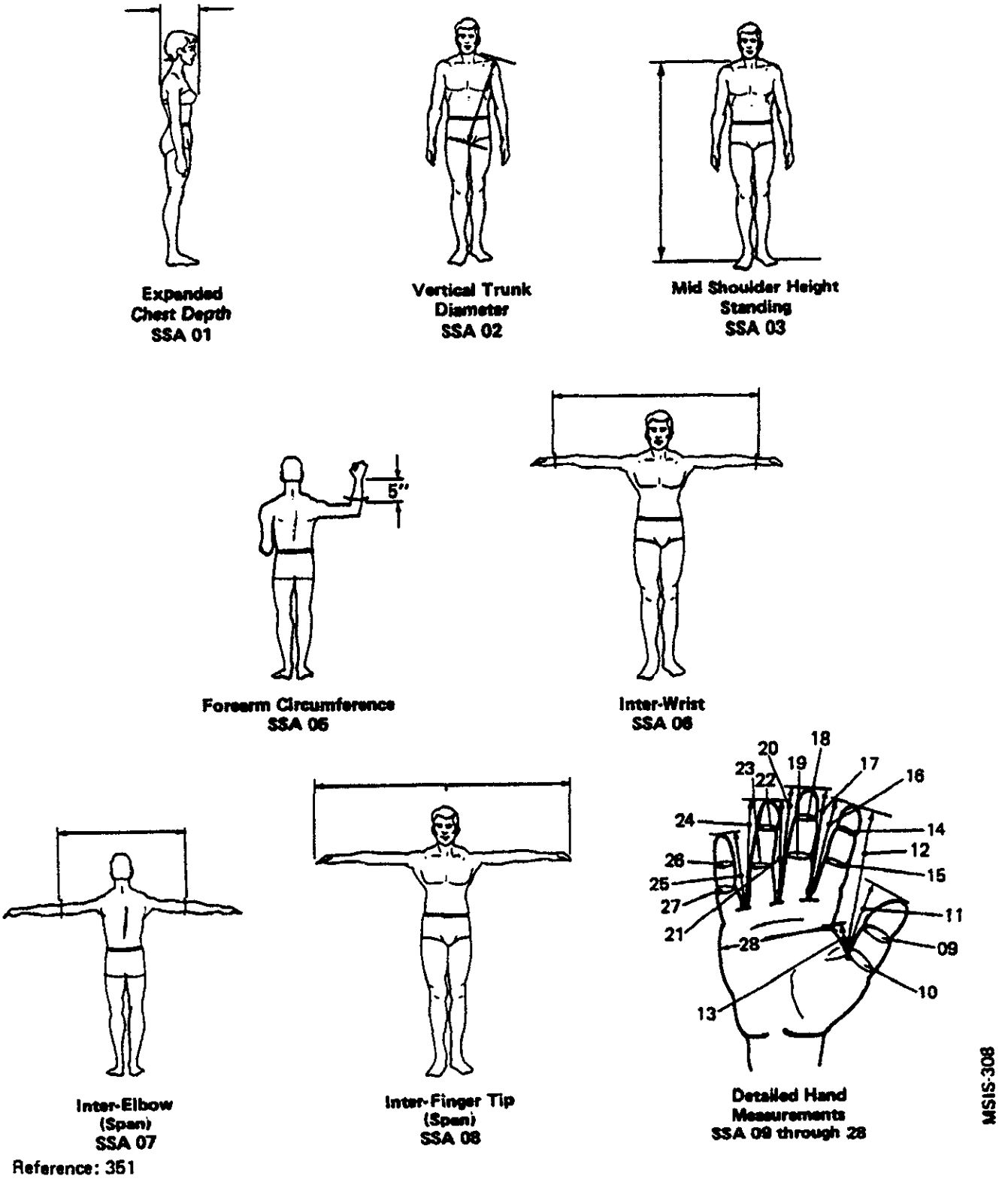

Reference: 351

Figure 14.3.4.1-3. Space Suit Non-Standard Anthropometrics

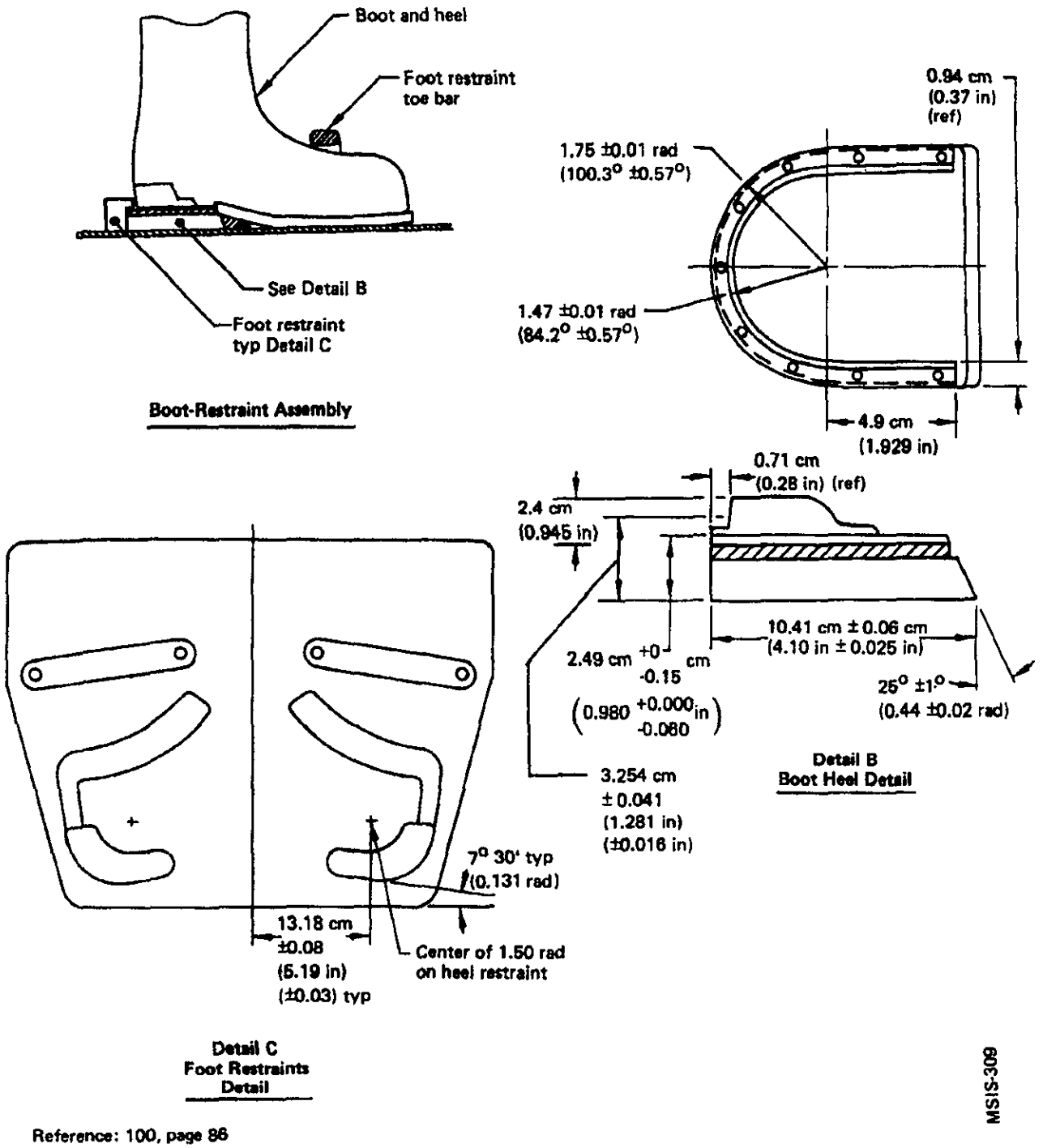

Reference: 100, page 86

Figure 14.3.4.2-1. STS EMU Boot Interface as an Example Design Solution

Item	Range	Torque
Shoulder mobility		
Adduction/abduction	2.62 rad (150 deg)	13.6 Nm (12 in-lbs)
Lateral/medial	0.35/2.62 rad (20 deg/150 deg)	1.36 Nm (12 in-lbs)
Flexion/extension	3.14 rad (180 deg)	4.52 Nm (40 in-lbs)
Rotation (x-z plane)	1.57 rad (90 deg)	3.39 Nm (30 in-lbs)
Rotation (y-z plane) (lateral-medial)	2.09 rad (120 deg)	3.39 Nm (30 in-lbs)
Elbow mobility		
Flexion/extension	2.27 rad (130 deg)	1.36 Nm (12 in-lbs)
Wrist mobility		
Flexion/extension	1.57 rad (90 deg)	0.68 Nm (6 in-lbs)
Abduction/adduction	2.09 rad (120 deg)	0.68 Nm (6 in-lbs)
Waist mobility		
Flexion/extension (hip and waist)	1.57 rad (90 deg)	5.42 Nm (48 i.-lbs)
Rotation	2.62 rad (150 deg)	12.43 Nm (110 in-lbs)
Hip mobility		
Flexion	1.22 rad (70 deg)	2.71 Nm (24 in-lbs)
Abduction	0.17 rad (10 deg)	2.71 Nm (24 in-lbs)
Knee mobility		
Flexion (standing)	2.09 rad (120 deg)	1.36 Nm (12 in-lbs)
Flexion (kneeling)	2.62 rad (150 deg)	1.36 Nm (12 in-lbs)
Ankle mobility		
Flexion/extension	0.70/0.70 rad (40 deg/40 deg)	1.36 Nm (12 in-lbs)
Forearm mobility		
Wrist rotation	31.4 rad (180 deg)	0.68 Nm (6 in-lbs)
Glove mobility		
Finger flexion/extension	Grasping a one-inch diameter rod for 5 minutes	—

MSIS-310

Reference: 263, Table II, Page 3-20
351

Figure 14.3.4.3-1. STS Space Suit Joint Mobility and Torque Specifications at 4.3 psig

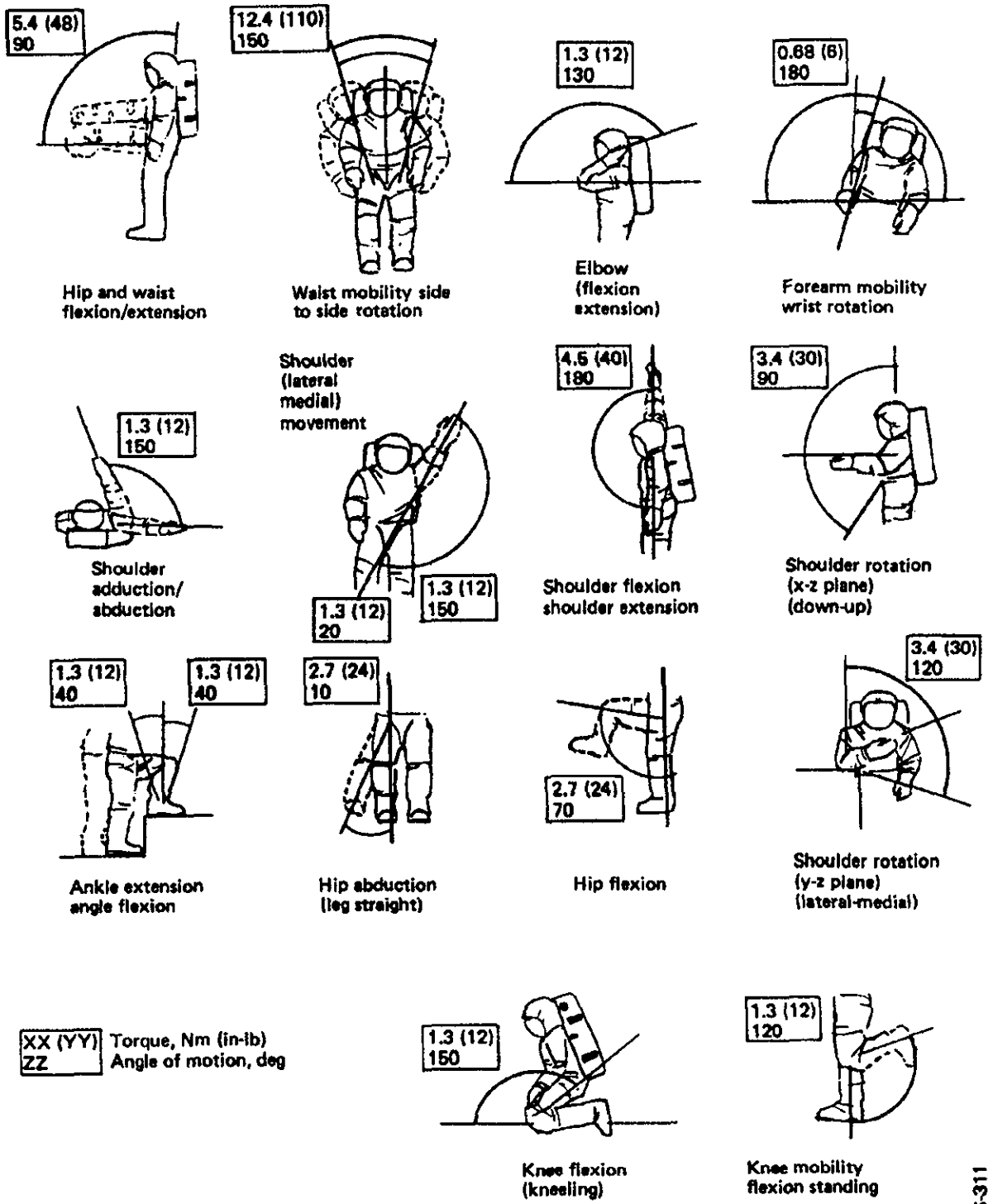

Reference: 263, Table II, page 3.21
351

Note:
The angles illustrated and those listed do not always coincide

Figure 14.3.4.3-2. STS Space Suit Joint Mobility Range Specifications for 4.3 psig

System provision	Parameter	Performance		
Helmet and EVVA optical visibility	Field of vision	120 deg. left and right in the horizontal plane. 105 deg. down and 90 deg. up in the vertical plane		
	Critical area of vision	Vertical		90 deg 1.57 rad
		Superior-temporal		62 deg 1.08 rad
		Superior		85 deg 1.48 rad
		Inferior-temporal		85 deg 1.48 rad
		Inferior		70 deg 1.22 rad
Optical distortion		No visible distortion or optical defects detectable by the unaided eye. (20/20 visual acuity) at the typical "as worn" position		
		UV	Luminous	IR
Transmittance	Nanometers (nm)	200-300	400-700	700+
Thermal/coating optical characteristics				
	Characteristics	Inner protective visor		Outer sun visor
	Transmittance			
	550 nm	70% min.		16 ± 4%
	1100 nm	N/A		10% max.
	Solar reflectance			
	550 nm	5% max.		40% min.
	2400 nm	70% min.		N/A
	700 nm	N/A		55% min.

Reference: 263, Table II, Page 4-9
351

MSIS-312

Figure 14.3.4.4-1. STS EVA Helmet and Extravehicular Visor Assembly Visual Range Limitations

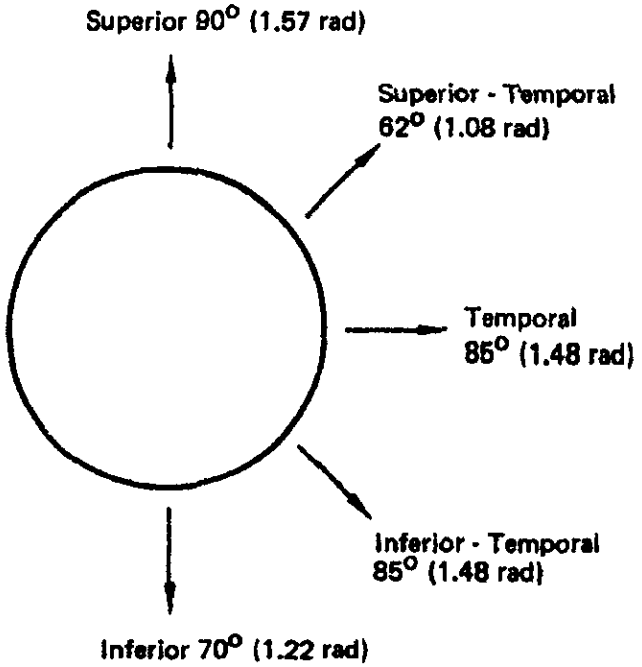

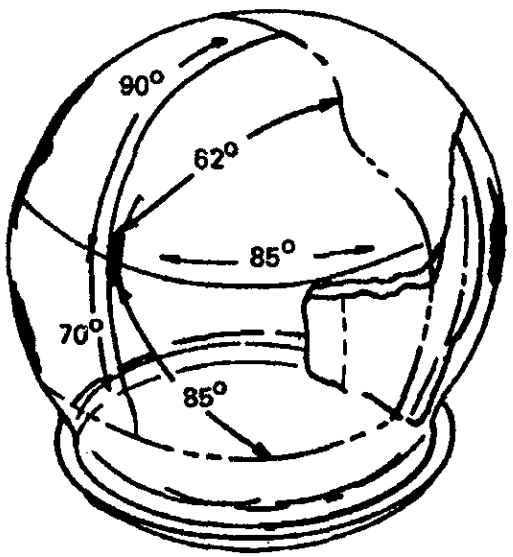

Note:
Operational field-of-vision is considerably modified by the protective extravehicular visor assembly

Reference: 320

MSIS-313
REV A

Figure 14.3.4.4-2. STS EMU Field-of-Vision as an Example Design Solution

14.3.4.5 STS EMU Man Induced Load Examples

{A}

Manload values are derived from tests specifically designed and performed to supply information relating to pressure suit design. In derivation of testing results, the average plus three times the standard deviation was used to represent the 95th percentile male, the worst case design loading. Thorough measurements of manloads have been done for both the Apollo and the STS space suit. The larger of the induced manloads of the two suits is taken as the worst case. A summary of the current design manloads is shown in Figure 14.3.4.5-1. The higher manloads generally occurred in the Apollo space suit where braided steel cables were used, with much higher stiffness than the fabric restraint lines of the Shuttle suit.

Location	Load values					
	Man induced loads		Plug @ 30.3 kPa (4.4 psig)		Total	
	kg	(lbs)	kg	(lbs)	kg	(lbs)
HUT - Scye Pivot (1)	68	(150)	96	(212)	164	(362)
HUT - gimbal stop	—	—	—	—	68	(150)
Uper arm	68	(150)	44	(96)	112	(246)
Lower arm	68	(150)	23	(50)	91	(200)
Arm sizing	68	(150)	23	(50)	91	(200)
Waist	226	(499)	195	(430)	421	(929)
Brief, side	136	(300)	100	(221)	236	(521)
Brief, fore and aft	183	(404)	195	(430)	378	(834)
Thigh, inside	159	(350)	71	(157)	230	(507)
Thigh, sizing	159	(350)	71	(157)	230	(457)
Thigh, outside	136	(300)	71	(157)	207	(457)
Leg, inside	159	(350)	27	(60)	186	(410)
Leg, sizing	159	(350)	27	(60)	186	(410)
Leg, outside	136	(300)	27	(60)	163	(360)
Boot, inside	159	(350)	23	(50)	181	(400)
Boot, outside	136	(300)	23	(50)	159	(350)
Glove (1)						
Axial restraints	40.6	(89.6)	22.5	(49.6)	61.8	(136.2)
Fingercap	12.0	(26.4)	2.3	(5.1)	14.3	(31.3)
Thumb cap	35.1	(77.4)	3.2	(7.1)	38.3	(84.2)
Finger crotch	16.0	(35.2)	6.0	(13.3)	22.0	(48.0)
Thumb crotch	33.1	(73.0)	6.0	(13.3)	39.1	(85.8)

Reference: 320

Note:

(1) Design plug loads on HUT scye pivot and modified glove are based on maximum operating pressure of 36.5 kp (5.3 psig)

Figure 14.3.4.5-1. Example Load Values for the STS EMU at 4.4 psig

MSIS-314

14.4 EVA WORKSTATIONS AND RESTRAINTS

{A}

14.4.1 Introduction

{A}

This section establishes design criteria for EVA workstations and crew restraints. For the purpose of this section, and EVA workstation will be defined as any area where pressure-suited tasks will be performed, including space suit controls and displays. A restraint will be defined as a means of stabilizing an EVA crewmember that requires physical crewmember.

14.4.2 EVA Workstation and Restraint Design Considerations

{A}

EVA workstations should be designed to optimize task performance. Workstations and restraints should be designed on the basis of an EVA crewmember's safety considerations and performance capabilities and limitations

The following factors should be considered in the design of EVA workstations and restraints:

a. EVA Work Envelope - The reach, mobility, and field-of-view restrictions imposed by a pressure suit, and the effect of neutral body posture on the line-of-sight should be considered in workstation and restraint design.

b. Hardware Design for EVA Access - Hardware intended for EVA repair or replacement should be designed to facilitate access by suited crewmembers and should provide for EVA tool access.

c. EVA Controls and Displays - The location and configuration of controls and displays at an EVA workstation should be based on EVA crewmember and suit-imposed capabilities and limitations.

d. EVA Workstation Lighting - Adequate lighting should be provided at worksites to optimize task performance and preclude visual fatigue.

e. EVA Crew Restraints - Appropriate crew restraints are necessary for optimal task performance.

14.4.2.1 EVA Work Envelope Design Considerations

{A}

The work envelope, mobility range, and visual field-of-view of the suited crewmember should be considered in workstation design.

EVA workstations should be designed to accommodate the characteristics of the suited female and the suited male user population.

The effects of neutral body position on the EVA crewmember's line-of-sight should be taken into consideration in workstation design.

(Refer to Paragraph 9.2.4, Human/Workstation Configuration, and Paragraph 8.6.2, Envelop Geometry Design Consideration, for other considerations that pertain to work envelopes).

14.4.2.2 Hardware Design Considerations for EVA Access

{A}

Hardware to be manipulated by an EVA crewmember should be designed to facilitate its use, removal, or replacement by a space suited crewmember.

a. Reach and Mobility - Hardware should be within the reach envelope and mobility constraints imposed by the crewmember size, the space suit design, and crew restraints.

b. Clearance - Sufficient clearance should be allowed around the hardware for access by a space suited gloved hand.

c. Tools - Physical access required for EVA tools should be provided.

d. Handholds and Tether Attach Points - These should be located at each EVA workstation.

e. Visual - Access to see the work space, components, and tools necessary for task accomplishment should be provided.

(Refer to Paragraph 12.2, Design for Maintainability - Design Considerations, for additional information that pertains to hardware and equipment.)

14.4.2.3 EVA Controls and Displays Design Considerations

{A}

EVA controls and displays are similar to those for IVA, but should be designed based on the following considerations:

a. Space Suit-Controls Interface-EVA control size, clearances, location, type, and actuation force should be based on the limitations imposed by the space suit and glove on the EVA crew member.

b. Displays - Display location should be based on the visual restrictions imposed by the space suit.

c. Labeling - Labeling and color coding of EVA controls and displays should be consistent with IVA labeling, when possible, considering environmental visual factors such as glare, contrast, and illumination available.

d. Space Suit Controls - Controls - Controls mounted on the EVA space suit should be within the field of view of the suited crewmember.

(Refer to Paragraph 9.2.3, Control/Display Placement and Integration, and Paragraph 9.5, Labeling and Coding, for other considerations that pertain to hardware controls and displays.)

14.4.2.4 EVA Workstation Lighting Design Considerations

{A}

Lighting requirements at EVA workstations may be provided by direct or reflected solar illumination, permanently mounted lights, portable lights, or a combination of these sources.

The following factors should be considered in the design of workstations lighting:

a. Orbital Condition - Lighting should be adequate for both day and night orbital conditions.

b. Required Illumination - Level of illumination required is task-specific.

c. Specular glare is created when the image of a light source is reflected from a surface in the visual field. Direct glare is produced by a light source located within the visual field. Provisions should be made for reducing both types of glare.

d. Luminance Ratio - The ratio between the luminance of objects and the surrounding area. A luminance ratio should be set that optimizes performance for the level of task detail. Higher luminance ratios are desirable for finer detail work.

e. Contrast - The difference between the luminance an object or feature and its background. Human attention tends to be attracted to high contrast elements in the visual environments.

(Refer to Paragraph 8.13.2, Lighting Design Considerations, for other considerations that pertain to workstation lighting.)

f. Safety - The lack of convective currents to take away heat means that physical protection should be provided to eliminate any thermal safety hazards.

g. Exterior Light Controls - Light controls for permanently installed exterior lighting should be located both at the exterior and interior of the space module at convenient locations.

14.4.2.5 EVA Crew Restraint Design Considerations

{OP}

Proper restraint of the EVA crewmember at the workstation is essential for successful microgravity EVA operations. Failure to provide adequate restraint can be the single most limiting factor of all EVA design elements. Inadequate restraint induces unnecessarily high workloads and may lead to crew fatigue, overloading of the life support system, and premature termination of the EVA. Inadequate restraint also increases the potential for equipment damage during EVA operations.

Restraints for each workstation should be selected on the basis of the task to be performed. Tethers and handholds may be adequate for short-term tasks such as inspection and monitoring. Foot restraints should be provided for tasks requiring moderate-to-heavy force application and long-term positioning.

Preinstalled handholds and handrails should be used. Crew-attached or portable handrails, handholds, and foot restraints should be considered for non-rountine or unplanned EVA workstations.

Handholds should be provided for ingress/egress of food restraints.

(Refer to Paragraph 11.7.2.2, Personnel Restraints Design Considerations, Paragraph 8.9.2, Mobility Aids and Restraint Integration Design Considerations; and Paragraph 11.8.2.1, Handhold and Handrail Design Considerations for other restraint and mobility aid design considerations.)

14.4.3 EVA Workstation and Restraint Design Requirements

{A}

This section defines the design requirements for EVA workstations and restraints. Requirements driven by EVA anthropometry, crew restraints, hardware design for EVA access, control and display specifications, and lighting required at the workstation are included.

(Refer to Paragraph 9.2.3, Control/Display Placement and Integration, for other requirements that may pertain to controls and displays.)

14.4.3.1 EVA Work Envelope Design Requirements

{A}

EVA workstations shall be designed based on the reach envelopes, field-of-view, and neutral body posture of the space suited crewmember defined in Paragraph 14.3.2.2

(Refer to Paragraph 9.2.4.2, Human/Workstation Configuration Design Requirements, and Paragraph 8.6.3.1, Crewstation Body Envelopes Design Requirements, for other requirements that pertain to envelope geometry.)

14.4.3.2 EVA Control and Display Design Requirements

{A}

EVA control and display designs shall include the following:

a. Controls - EVA control type, location, and actuation forces shall conform to the EVA requirements in Paragraph 9.2, Workstation Layout, and Paragraph 9.3, Controls, with the following additions and exceptions to those requirements:

1. Glove Interface - All controls with the potential to be operated by an EVA crewmember shall be operable by a crewmember wearing a pressurized EVA space suit glove.

2. Switches - Guarded switches shall be employed where possible. Switches shall provide tactile and/or visual feedback of position.

3. Mechanical Feedback - Mechanical control feedback shall be sufficient to override space suit glove attenuation so that the EVA crewmember receives positive indication that the control function is completed. The mechanical feedback actuation force shall be detectable but not less that 15.5 N (3.5 lb).

4. Load - EVA controls shall withstand crew-imposed loads of 1,254 Newtons in all directions or be protected from these loads.

5. Inadvertent Actuation - Protection shall be provided for all EVA controls to prevent inadvertent actuation. Toggle switches mounted on the pressure suit in sagittal or the transverse plane shall had their normal EVA operational position toward the crewmember.

6. Reach Envelope - EVA controls shall be located within the visual and reach envelope of the potential EVA crew population.

7. Spacing - Control spacing shall permit selective operation of individual controls by a space suited crewmember.

b. Displays - EVA display type and location shall conform to the IVA display requirements in Paragraph 9.4.2.3 of this document, with the following additions/exceptions:

1. Type - EVA display type shall be appropriate for the EVA task performed.

2. Loads - EVA displays shall withstand crew-imposed contact loads in all directions or be protected from these loads.

3. Field-of-View - EVA displays shall be located within the field-of-view permitted by the pressure suit and restraint system.

4. Readability - EVA displays shall be readable over the range of lighting extremes expected.

(Refer to Paragraph 9.2.3.2 Control/Display Placement and Integration Design Requirements, for additional requirements on field-of-view.)

c. Labeling - Labeling and color coding at EVA workstations shall conform to the IVA labeling and coding requirements in Paragraph 9.5 and sub-paragraphs of this document, with the following exceptions:

1. Attachment - EVA labels shall be mechanically or permanently attached to the mounting surface.

2. Color Coding - Color coding shall be used only when adequate white illumination is available at the EVA workstation.

14.4.3.3 EVA Workstation Lighting Design Requirements

{A}

(Refer to Paragraph 9.2.2.2.1, Workstation Illumination, for other requirements that pertain to lighting and illumination.)

Illumination categories and value ranges for generic EVA activities are presented in Figure 14.4.3.3-1, and minimum illumination levels for EVA tasks are given in Figure 14.4.3.3-2.

Additional illumination requirements include:

a. Lights - EVA workstations shall be illuminated by permanently mounted and/or portable lights. Illumination shall be adequate for task-specific requirements during both day and night conditions.

Type of activity	Illuminance range	
	Lux	(fc)
Translate a corridor	30 - 55	3 - 5
Lowlight work areas with occasional simple visual tasks	55 - 110	5 - 10
Visual tasks with large size or high contrast objects	215 - 325	20 - 30
Visual tasks with small size or medium contrast objects	325 - 750	30 - 70
Visual tasks with very small size or low contrast objects	540 - 1080	50 - 100
Visual tasks with objects of very small size and low contrast over a prolonged period	1080 - 2150	100 - 200

MSIS-315

Reference: 320
351

Figure 14.4.3.3-1. Illuminance Categories and Value Ranges for Generic EVAs

EVA Tasks*	Minimum illuminance	
	Lux	(fc)
Astronaut movement to worksite for satellite repair mission or cargo transfer	55 - 110	5 - 10
Astronaut positions satellite in cargo bay or station worksite area	215	20
EVA satellite servicing worksite; hand tool utilization for simple, non-hazardous repair missions	325	30
EVA satellite servicing worksite; use of new and complex tools, non-hazardous	540	50
EVA satellite servicing worksite; complex tools and hazardous tasks	810	75

MSIS-316

*Assumes a background reflectance range of 5 - 80%

Reference: 320
351

Figure 14.4.3.3-2. Minimum Illuminance Levels for EVA Tasks

b. Glare - EVA lighting shall not cause excessive glare or create any other annoyance to the crew.

c. Field-of-View - Light sources at workstations shall not be located within 1.05 radians (60 degrees) of the center of the crewmember's field-of-view.

d. Diffuse Lighting - Diffuse lighting shall be used and highly polished surfaces shall be avoided.

e. Fixtures - Light source shall provide even illumination. Fixtures shall be designed to direct light into the desired area without causing visual discomfort to the crew. Light fixtures located close to workstations shall be designed to protect the crewmembers from thermal and physical hazards.

f. Lumination Ratio - The luminance ratio at workstations shall l conform to the following minimum specifications:

1. 3:1 between task areas and immediate surround.

2. 5:1 between task area and adjacent surround.

3. 10:1 between task areas and remote surfaces.

4. 20:1 between light sources and immediate adjacent surfaces.

g. Portable Lights - Portable lights shall be provided for unplanned maintenance, emergencies, and task performance where adequate fixed illumination is not available.

h. Exterior Light Controls - Light controls for permanently installed exterior lighting shall be located both at the exterior and interior of the space module at convenient locations.

i. Light Beam Spread - The lighting system shall have sufficient beam spread from a normal plane to provide the crewmember with good peripheral visual orientation.

14.4.3.4 EVA Crew Restraint Design Requirements

(OP)

The use and design of EVA crew restraints shall conform to the following requirements:

(Refer to Paragraph 8.9.3, Mobility Aids and Restraints Architectural Integration Design Requirements, and Paragraph 11.7.2.3, Personnel Restraint Design Requirements, for other requirements.)

a. Force Exertion - Foot restraints shall be used for acturation or operation of equipment which requires the crewmember to exert forces exceeding those given in Figure 14.4.3.4-1. EVA waist tether restraint systems may be used when actuation or operation of equipment does not require forces and durations greater than those specified in Figure 14.4.3.4-1.

b. Foot Restraints - EVA foot restraints:

1. Shall be designed to permit easy insertion and removal of pressure suit boots by the crewmember.

Linear force	Duration
4.4 N (1.0 lbf)	4.5 sec
22.2 N (5.0 lbf)	2.1 sec
44.5 N (10.0 lbf)	1.4 sec

MSIS-317

Reference: 253, page 5-9

Note:
The maximum distance through which forces may be applied is 61 cm (24 in)

Figure 14.4.3.4-1. Maximum Forces and Duration Capable of a Tethered but Free-Floating EVA Crewmember

2. Shall accommodate all boot sizes.

3. Shall require a deliberate action for removal of a boot.

4. Shall provide a contingency method for removal of a jammed boot from a foot restraint.

5. Shall provide the capability to react to loads applied by the crewmember.

(Refer to Paragraph 11.7.2.3.2, Foot Restraint Design Requirements, for other requirements.)

c. EVA Safety Tethers and Safety Hooks - Tethers and tether hooks:

1. Shall have a handle that will fit the gloved hand of a space-suited crewmember, allow the hook to be free for utilization, and have a minimum length of 9.5 cm (3.75 in.).

2. Shall have design features that indicate whether the latch lock is engaged or disengaged, and to indicate direction for engaging and disengaging the lock.

3. Safety tether attachment hooks shall be removed and attachable by one-handed operation and employ a redundant lock feature such as push-to-open buttons that must be operated to disengage or release a tether.

4. Shall provide a contingency method for removal of a snagged tether or release of a crewmember from a tether hook.

d. Airlock - Provide handrails and tether attach points and other personnel restraints at the interior and exterior of the airlock.

e. EVA Suit Don and Doff - Provide personnel and equipment restraints at the EVA space suit facility.

14.4.3.5 EVA Equipment Tether Design Requirements

{A}

EVA equipment tethers shall be designed to the following requirements:

a. One-Handed Operations - All EVA equipment tethers shall be designed such that tether attachment and removal methods permit one-handed operation using a pressure suit glove.

b. Common Attachment Point - All EVA equipment tethers shall use a common attachment method.

c. Tether Attachment Points - All equipment items shall be provided a standardized tether hook receptacle shown in Figure 14.4.3.5-1. This standardized receptacle shall also be provided on the interfacing surface to which the item is to be secured.

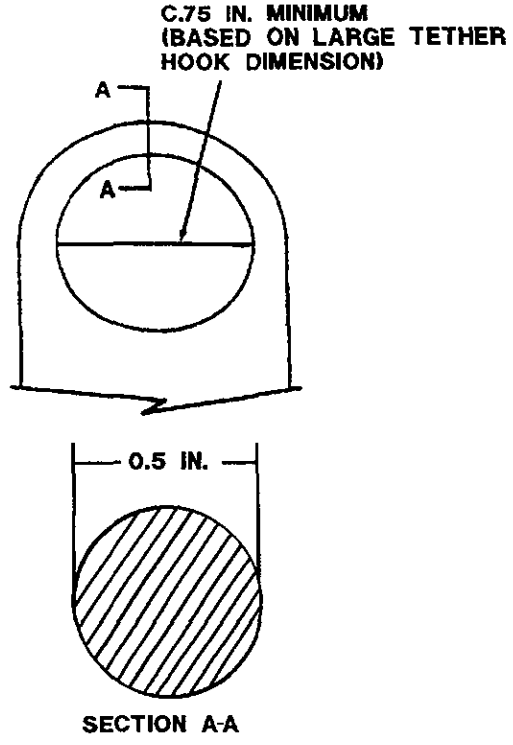

MAXIMUM DIMENSON 0.5 INCHES
(BASED ON MAXIMUM OPENING OF SMALL TETHER HOOK / MINIMUM SIZE DEPENDS ON MATERIAL AND 574 LB LOAD LIMIT)

Figure 14.4.3.5-1 Tether point requirements

d. Tether Lock Status Indicator - The tether lock shall be designed in such a way that it will be easy to recognize when the hook is locked/unlocked in body day and night lighting conditions.

14.4.4 Example EVA Workstation and Restraint Design Solutions

{A}

Included in this section are EVA workstation lighting and restraint designs that have been successfully employed in the past.

14.4.4.1 EVA Workstation Lighting Example Design Solutions

{A}

EVA lighting requirements have been satisfied in the STS program through permanently mounted and portable lights. Seven cargo bay flood lights provide a minimum of lux (541 fc.) at the cargo bay centerline and the bulkhead light provides 580 lux (54 fc.) at 9.1 m (30 ft.).

Lights mounted on the space suit helmet have been employed to supplement permanently mounted lights. The four EMU lights, shown in Figure 14.4.4.1-1, are directionally adjustable and provide varying levels of illumination through light combination selection. Each of the four lamps produces 215 lux (20 fc.) at 1 m (3 ft.).

A second example of portable lighting is the EVA flashlight, shown in Figure 14.4.4.1-2. The light is mounted on a flexible neck and a mirror is provided to further aid visibility into inaccessible areas.

14.4.4.2 EVA Crew Restraint Example Design Solutions

{OP}

The portable foot restraint (PFR) is a working platform that restraints the crewmember during the performance of EVA tasks. A two-axis (roll and pitch) gimbal system with lock knobs is provided for adjustment and positioning. The PFR is shown in Figure 14.4.4.2.-1.

An EVA waist tether is shown in Figure 14.4.4.2-2. The tether is made of Nomex webbing and is approximately 91 cm (36 in.) long. Opening of the two hooks requires that the push-to-open buttons on each side be depressed simultaneously while the hook is squeezed. The larger hook attaches to the space module and the smaller hook attaches to the EMU. Two waist tethers may be attached to the EMU.

14.4.4.3 EVA Equipment Tether Hook Example Design Solution

{OP}

Figure 14.4.4.3-1 describes the general specification of the EVA equipment tether hook.

14.5 EVA MOBILITY AND TRANSLATION

{A}

This section details the design considerations and requirements for EVA mobility and translation. EVA translation routes, aids, and restraints are discussed. The EVA airlock, passageways, and equipment transfer are also included.

14.5.1 Introduction

{A}

14.5.2 EVA Mobility and Translation Design Considerations

{A}

The capabilities of the suited crewmember should be taken into consideration in the design of translation and equipment transfer tasks and hardware.

Technical information	
Part number	10161-10061-04
Weight	2.27 kg (5 lb) (without main batteries) 2.67 kg (5.88 lb) (with main batteries)
Quantity flown	Two in the middeck Volume H locker
Main power supply	Two independent battery modules (one per side)
Main batteries	D-size lithium bromine complex (3.5 V, 8 A-hr each)
Battery life	3 hr min with four lamps operating
Voltage Open circuit Loaded	 3.77 ± 0.2 V dc 3.25 V dc
Lamps	Two halogen lamps per side (2.5 W each)
Lamp intensity	215 LUX (20 ft-c (min)) per lamp at 91 cm (3 ft)
Lamp life	20 hr
Lighting pattern	41 cm by 61 cm at 61 cm (16 in by 24 in at 2 ft) (four lamps on, pointed forward)
Operation	Momentary switch activated sequencing circuit on each side
Sequencer power supply	Four watch batteries in series per side
Sequencer battery	Silver oxide (1.5 V Duracell, 38 mA-hr)
Thermal protection	71 deg C ± 2 deg (160 deg F ± 5 deg) thermostats and multilayer insulation
Structural F S	1.4

Dimensional data	
A	22.38 cm (8.81 in)
B	11.84 cm (4.66 in)
C	19.71 cm (7.76 in)
D	39.42 cm (15.52 in)
E	50.24 cm (19.78 in)
F	10.92 cm (4.3 in)
G	4.78 cm (1.88 in)

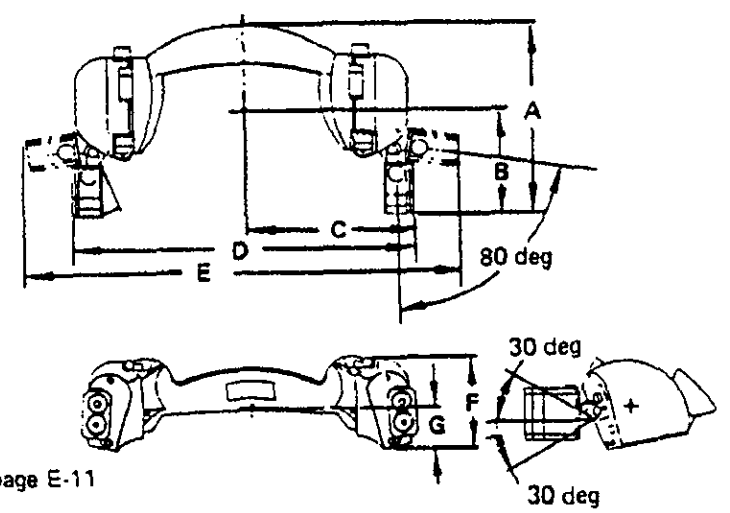

Reference: 145 page E-11

Figure 14.4.4.1-1. STS Space Suit Helmet Mounted Lights

Technical information	
Part number	10172-20561-02
Weight	0.13 kg (0.26 lb)
Battery	Two AA alkaline wrapped with Teflon and Kapton, 1.5 V each
Battery life	2 yr
Lamp	Standard flashlight bulb
Operation	Rotate bulb housing
Quantity flown	One for STS 41-G, 51-A, 51-I
Stowage	Middeck locker

Dimensional data	
A	30 cm (12 in) true length
B	3.56 cm (1.40 in)

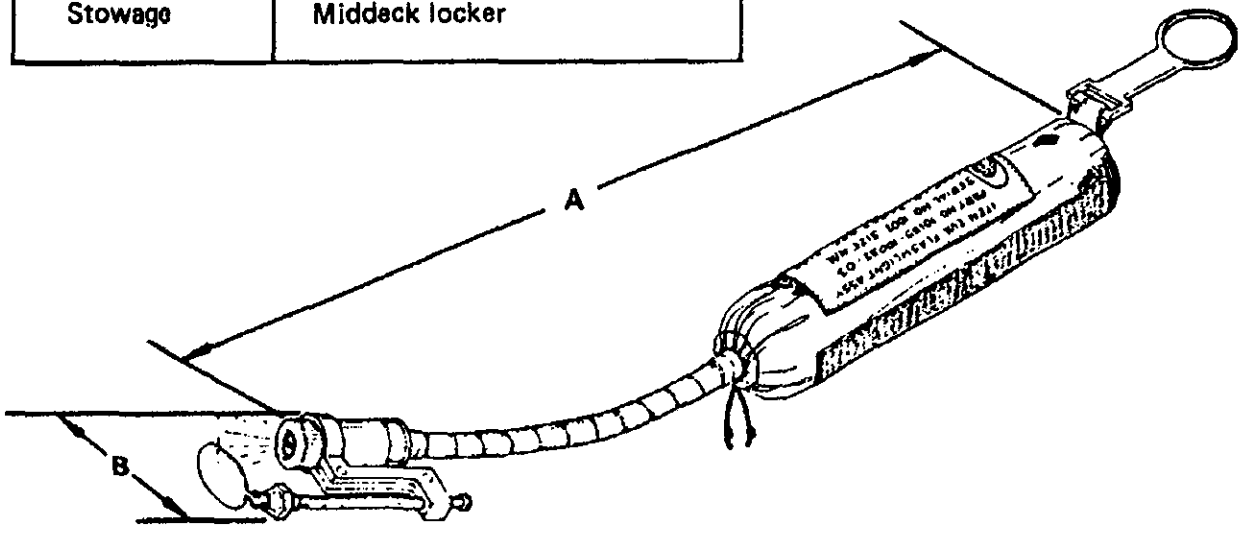

MSIS-319

Reference: 145, page F-1

Figure 14.4.4.1-2. EVA Flashlight

Technical information	
Part number	10159-10034-01, -02
Weight	3.8 kg (8.4 lb)
Material	Aluminum alloy
Input load	10176 configuration - 45 kg (100 lb), any direction 10155 configuration - 11 kg (25 lb), any direction
Quantity flown	One
Stowage	Orbiter forward bulkhead

Dimensional data	
A	40.49 cm (15.94 in)
B	52.07 cm (20.5 in)

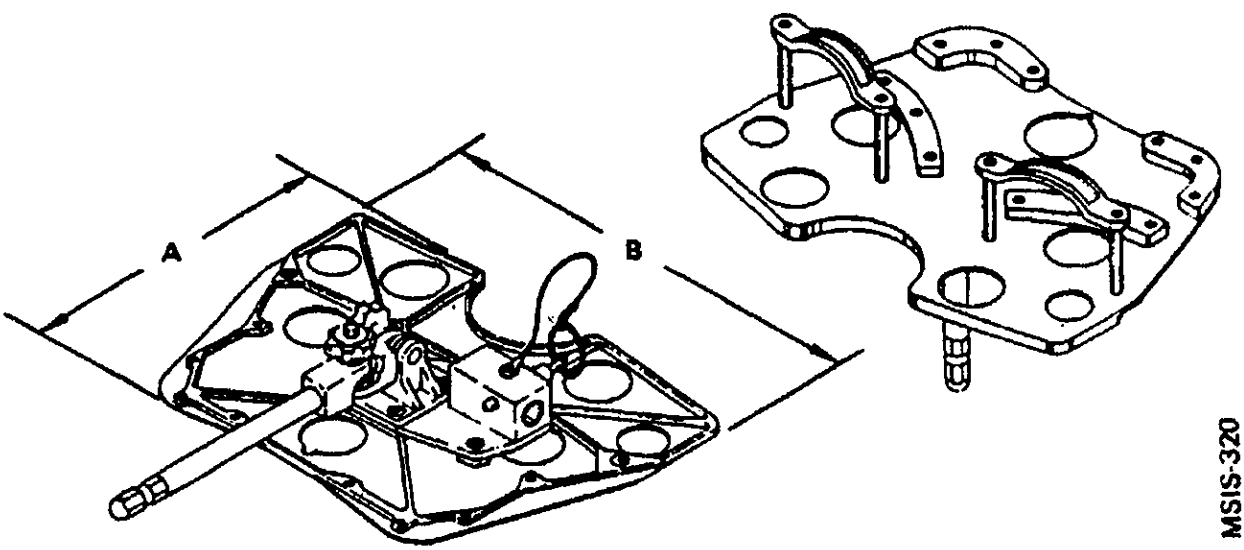

Reference: 145, pages 25 to 26

Figure 14.4.4.2-1. Portable Foot Restraint (PFR)

Technical information	
Part number	10151-20040-05
Weight	0.42 kg (0.93 lb)
Material	Nomex webbing strap, aluminum hooks
Webbing breaking strength	635 kg (1400 lb)
Load limit before extension	34 kg (75 lb)
Operational load limit	265 kg (585 lb)
Quantity flown	Two for each EMU

Dimensional data	
A	12.70 cm (5.00 in)
B	normal - 60.96 cm (24.00 in) break-away 127.00 cm (50.00 in)
C	18.42 cm (7.25 in)
D	10.16 cm (4.00 in)
E	13.34 cm (5.25 in)
F	3.30 cm (1.30 in)
G	1.91 cm (0.75 in)
H	1.78 cm (0.70 in)
I	3.81 cm (1.50 in)
J	5.84 cm (2.30 in)

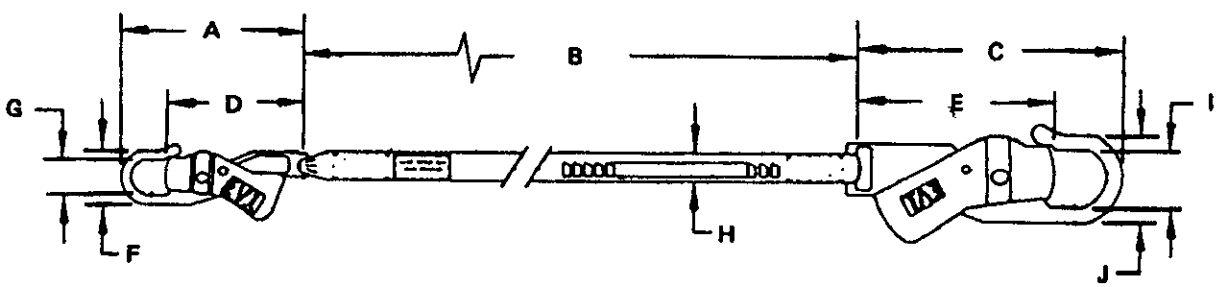

Reference: 145, page W-1

MSIS-321

Figure 14.4.4.2-2. STS Space Suit Waist Tether

Parameter	Design requirements/remarks
Dimensions	Handle length shall be 9.5 cm (3,75 in) minimum to fit in pressurized glove and allow hookto be clear for operation. Hook diameter recommended 19 mm (0.75 in) minimum for attachment to Orbiter tether attach points.
Design load limit	Dependent on intended use. Crewman safety tethers designed for 2610 N (585 lb) ultimate. Recommend 330 N (75 lbs) minimum for equipment tethers.
Operation	Hook must allow one-handed operation by a suited crewman.
Safety	Hook should employ lock-lock feature such that no single inadvertent action could open hook.
Materials	EVA tether hooks will primarily be manufactured from metals.

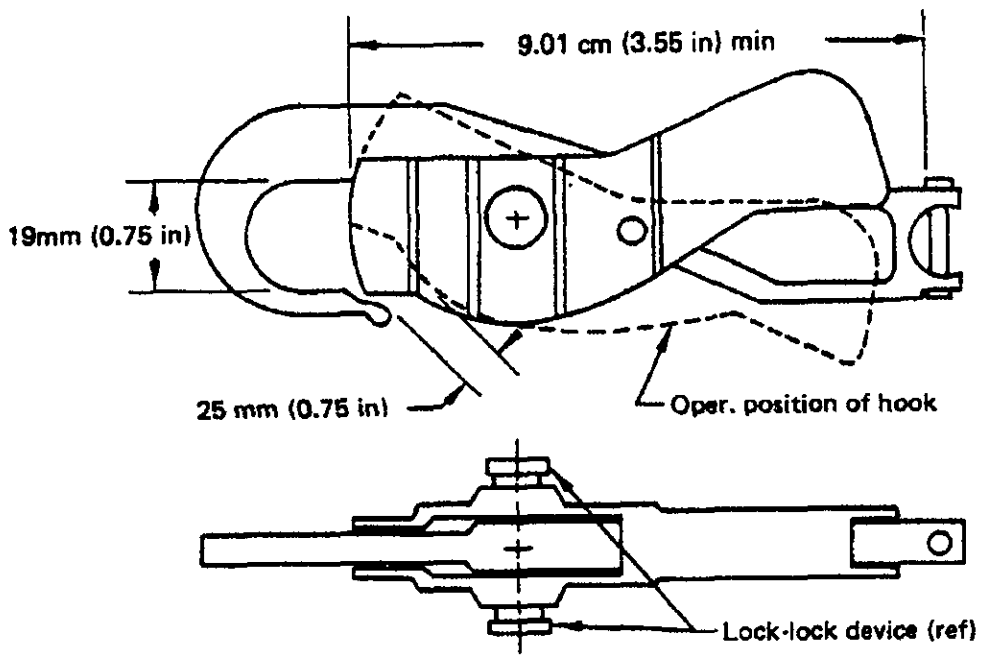

Reference: 100, page 89

MSIS-322

Figure 14.4.4.3-1. STS EVA Equipment Tether Hook General Specifications

14.5.2.1 EVA Translation Route Design Considerations

{A}

a. Cross Section of the Translation Route - The cross section of a translation route should have enough clearance for unimpaired movement. The selection of dimensions must consider the number of crew translating simultaneously along its route, the size of the space suit to be used, the size of equipment that may be in the translation path simultaneously, and the intrusion of translations aids into the path. Figure 14.5.2.1-1 show the definitive dimensions. The translation path dimension Y is determined by the following:

Y = # EMUs x (M+T) + # MAX Equipment x S + C where M is the depth of the EMU with the hands at the chest, T is the translation aid intrusion dimension, S is the equipment dimension, and C is the clearance. The required clearance is design specific. A circular corridor and a square corridor will require different clearances depending on the corridor dimensions selected, the EMU and the equipment configuration.

b. Translation Paths Bottlenecks - When a program selects the design of translation paths, consideration of the human productivity loss associated with bottlenecks in frequently traveled paths should be made.

c. EVA Hatches and Doors - Hatches and doors should be sized to provide adequate clearance for easy transfer. Hatches between space and the crew compartment should be hinged such that the higher pressure of the crew compartment aids in the sealing of the hatch to provide crew assist for this function. The EVA hatches should be easy to operate from either side with disassembly of actuators possible (emergency ingress) from the outside. Thermal protection of the hatch should not encumber the ingress/egress operation.

14.5.2.2 EVA Mobility Aids Design Considerations

{A}

The greatest momentum of the largest combination of EVA crew and transported objects should be considered when establishing the design loads for the mobility aids and aid attachments. Mobility aids, along a possible EVA crew translation route, should at least consider the design load required for the rescue of another EVA crewmember.

Mobility aids should be designed and positioned to provide translation stability at the translation rates expected for the translation route and through direction changes in the route.

The space suit glove interface should determine the dimensional design of manual mobility aids.

(Refer to Paragraph 8.9.2, Mobility Aids and Restraints Integration Considerations, and Paragraph 11.8, Mobility Aids, for other considerations that pertain to mobility aids).

14.5.2.3 EVA Translation Restraints Design Considerations

{A}

Appropriate crew safety restraints should be provided for all translation routes to ensure crew safety. Restraints should be provided for EVA equipment, and transferred equipment.

The greatest momentum of the largest combination of EVA crew and transported objects should be considered when establishing the design loads for the restraints and restraint attachments. Restraints along possible EVA crew translation routes should at least consider the design loads required for the rescue of another EVA crewmember.

Translation aids should be designed and positioned to minimize interference with the stability of translation at the expected translation rates even through direction changes.

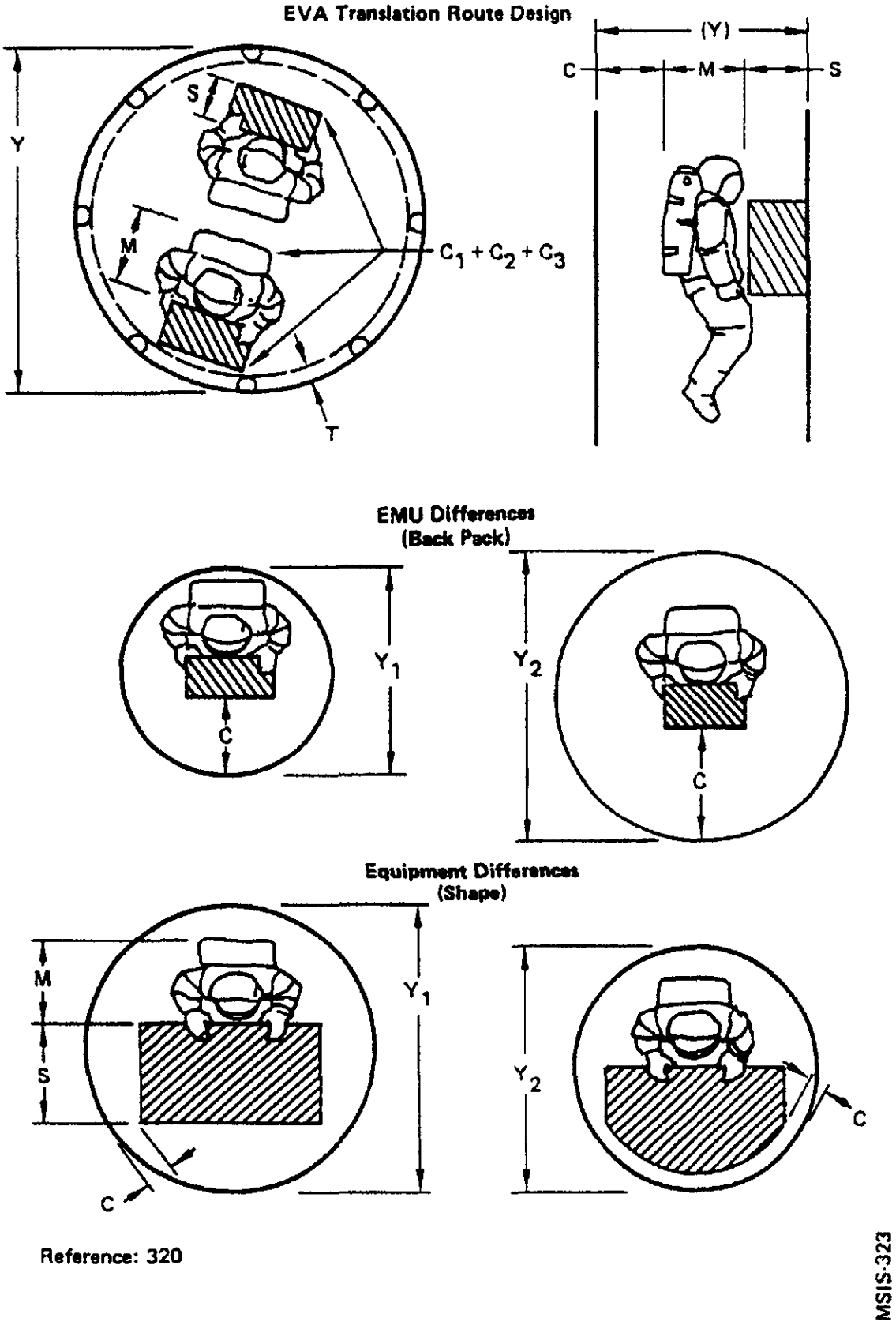

Figure 14.5.2.1-1. Clearances Required for Selected EVA Translation Routes

Translation restraints design and position should be such that the least number of engagements/disengagements are needed to minimize the risk of failure to attach in microgravity. Restraints should be positioned such that the crewman is restrained at all times. Consideration should be given to minimizing the crew time required to establish the restraint and to confirm completed engagement.

Appropriate crew restraints, usually safety tethers, should be provided for all translation routes to ensure crew safety and to facilitate crew translation and equipment transfer.

(Refer to Paragraph 8.7.2, Traffic Flow Design Considerations; Paragraph 8.8.2, Translation Path Design Considerations; Paragraph 8.9.2, Mobility and Restraints Integration Considerations; 8.10.2, Hatches and Doors Design Considerations; and Paragraph 11.8, Mobility Aids, for other considerations pertaining to restraints and mobility.)

14.5.2.4 EVA Airlock Design Considerations

{A}

Airlocks provide the means for the EVA crew to transfer from the IVA environment to the EVA environment without depressurizing the crew compartment. Many aspects of airlock design are critical emergency and safety items. Considerations are:

a. Volume considerations as a function of the EVA systems.

b. Contingency operations of hatches by an EVA crewmember.

c. The airlock hatches should accommodate the passage of two space suited crewmembers to provide the rescue of a disabled crewmember.

d. Refurbishment of the EVA System.

e. Servicing, checkout and stowage of the EVA system.

f. Additional volume and restraints should be considered for EVA transfer of hardware into, through, and out of airlocks.

14.5.2.5 EVA Passageway Design Considerations

{A}

A passageway is a pass-through area between two nonadjacent compartments. A tunnel is a passageway that permits translation by crewmember only along his or her longitudinal axis.

Passageway and tunnel design should take into consideration the clearance required for a suited crewmember and the mode of transit.

Because EVA pressure suits are continually improved and redesigned to meet specific program requirements, specific passageway diameters cannot be fixed. A multiplicative factor can be calculated for determining passageway diameters in which the clearance provided is a percentage of the suited crewmember.

Consideration should be given to the bottleneck impacts on crew productivity before EVA passageways are designed for only one crewmember.

(Refer to Paragraph 8.8, Translation Paths, for additional considerations on passageways.)

14.5.2.6 EVA Equipment Transfer Design Considerations

{A}

Appropriate crew mobility aids (Paragraph 14.5.2.2), restraints (Paragraph 14.5.2.3) and the design of the equipment being transferred are the key elements in successful EVA equipment transfer operations. Previous experience indicates that the EVA crewmember can successfully transfer a large variety of equipment.

The designer of hardware for EVA should consider module size, quantity, geometry, transfer distance, transfer time, temporary stowage, number of crewmembers required, and handhold and tethering provisions.

(Refer to Paragraph 11.8.3.1, Equipment Mobility Aid Design Considerations, and Paragraph 8.7.2.3, Equipment Transfer Design Considerations.)

14.5.3 EVA Mobility and Translation Design Requirements

{A}

14.5.3.1 EVA Translation Route Design Requirements

{A}

EVA translation routes shall conform to the following requirements:

(Refer to Paragraph 8.7.3, Traffic Flow Design Requirements, and Paragraph 8.8.3, Translation Path Design Requirements, for other requirements that may pertain to translation route design.)

a. Equipment - All equipment located along EVA translation routes shall be designed to withstand repeated use as mobility aids, or the equipment shall be guarded or protected. There shall be no protrusions, corners, or sharp edges along EVA translation routes.

(Refer to Paragraph 6.3.3, Mechanical Hazards , for related requirements.)

b. Translation and Mobility Aids :

1. Mobility aids shall be located at terminal points and direction change points on established crew translation paths.

2. Mobility aids shall be placed in all locations where equipment is not available as a substitute.

3. For EVA translation, mobility aids shall not be separated by more than 90 cm (36 in.). The preferred spacing is 60 cm (24 in.).

c. Handholds:

1. The orientation of translation and mobility handholds shall be such that the body position normally assumed to perform a task may be attained, and that normal body movement may be accommodated.

2. They shall also be oriented such that the plane formed by the handhold longitudinal axis and the cross-section major axis is approximately parallel with the body torso frontal plane.

d. Danger Warnings:

1. Translation and mobility handholds located within 30.5 cm (12 in.) of flight equipment shall be identified and color coded (regarding danger of injury to the crewmember due to equipment failure).

2. Equipment located along translation routes that could be damaged by a translating crewmember shall be identified and color coded.

e. Cross Section of the Translation Route - the dimension of the translation route (see Figure 14.5.3.1-1) shall not be smaller than the dimension required for the EVA crewmember to reverse direction (EMU height + clearance). The exceptions to this are:

1. Corridors where access is possible from either side and the length is no more than twice the length of the smallest EVA suited crewmember.

2. Corridors that have access from at least one end and are not longer than the shortest EVA suited crewmember.

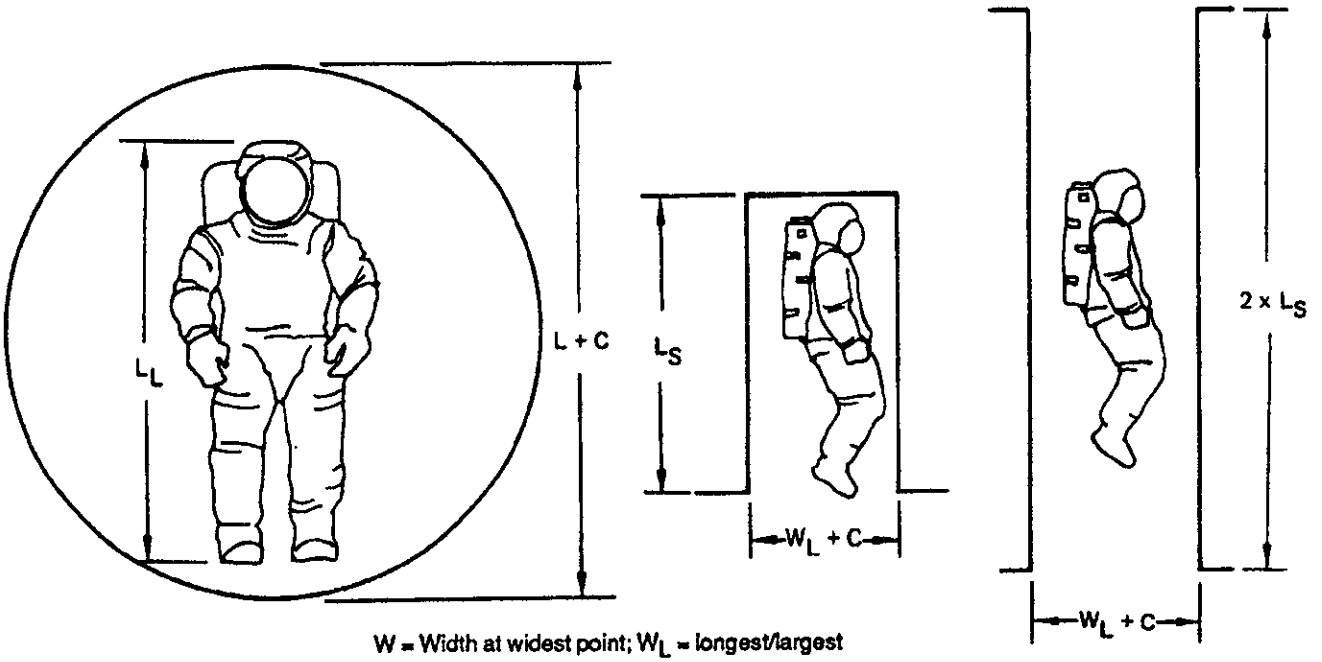

W = Width at widest point; W_L = longest/largest

L = Length of EVA system; L_S = shortest/smallest; L_L = longest/largest

C = Program specific clearances

Reference: 320, 351

MSIS-324

Figure 14.5.3.1-1. Cross-Section of the EVA Translation Route

f. EVA Hatches and Doors - The EVA hatches shall be operable form either side of the hatch. EVA translation aids shall be placed around the hatchway on both sides to support ingress/egress.

The latch mechanism shall require less than 110 Newtons (25 lbf) to operate. Opening the hatch shall not require more than 200 Newtons (45 lbf), and closing the hatch shall not require more than 200 Newtons (45 lbf).

g. Equipment Accessibility - Translation and mobility handholds shall be positioned such that crew-operated equipment and consoles are accessible and are not obstructed visually or physically by the handholds.

14.5.3.2 EVA Mobility Aids Design Requirements

{A}

EVA handholds/handrails shall conform to the following design requirements:

(Refer to Paragraph 11.8.2.2.1, Handhold and Handrail Dimensional Design Requirements, and Paragraph 8.9.3, Mobility Aids and Restraints Design Requirements, for other handhold dimensions that may pertain to EVA mobility requirements.)

a. Dimensions - EVA handhold and handrail dimensions shall conform to Figure 14.5.3.2-1.

b. Mounting Clearance - The minimum clearance distance between the low surface of the handrail/handhold and the mounting surface is 5.7 cm (2.25 in.).

c. Spacing for Translation - For EVA translation, handholds/handrails shall not be separated more than 92 cm (36 in.). Maximum spacing of 61 cm (24 in.) is preferred.

d. Spacing for Worksites - Handrails/handholds shall not exceed 45.8 cm (18 in.) above or below the shoulder or 61 cm (24 in.) to the left or right of the body centerline when working in a foot-restraint position.

e. Safety Tether Attachment - EVA handrails/handholds will accommodate safety tether hooks at a spacing not to exceed 90 cm (36 in) preferred 60 cm (24 in).

f. Lighting - EVA handholds/handrails shall be illuminated in accordance with Paragraph 14.4.3.3.

g. Color - EVA handholds/handrails shall minimize specular reflection and shall be a standard color throughout the space modules, be clearly visible, and have a high visual contrast with the background.

h. Temperature - Surface temperature of EVA handholds/ handrails shall be compatible with the touch-temperature limits required by the space suit glove.

(Refer to Paragraph 14.2.3.11, EVA Touch Temperature and Pressure Design Requirements, for specified EVA glove temperature requirements).

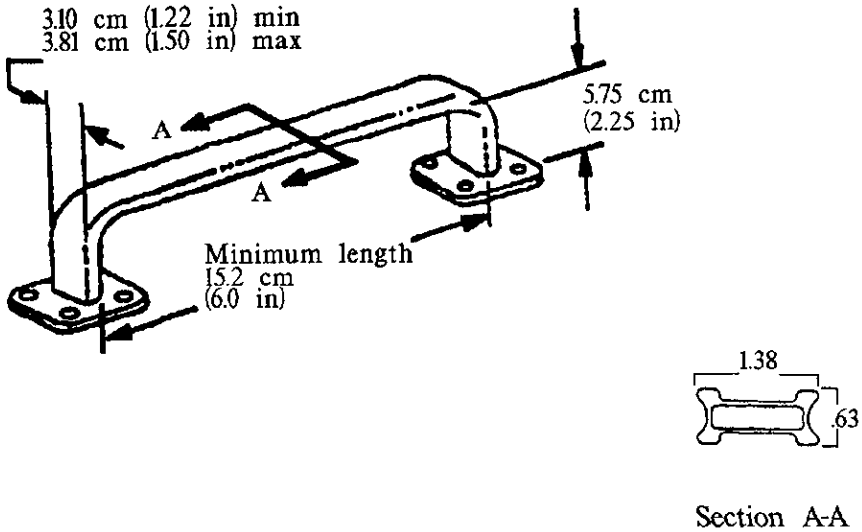

Reference: 1, Figure 4.1-6, pg. 4.1-3
100, Table 11.2-1, pg. 80

Note: Dimensions ± 0.15cm (±0.060 in)

MSIS512
Rev. B

Figure 14.5.3.2-1 Standard EVA Handhold Dimensional Requirements

14.5.3.3 EVA Translation Restraints Design Requirements

{A}

Except for free flying maneuvering unit operation, EVA crewmembers in microgravity environments shall always be attached or otherwise restrained to the space module. Safety tether points shall be located as follows:

a. Translation Routes - No more than 90 cm (36 in.) between EVA translation aids, 60 cm (24 in.) preferred.

b. Direction Change - At either side of a directional change in equipment transfer or a distinct hand-off point.

c. Equipment Transfer Paths - At the extreme ends of equipment transfer paths.

d. Tethers and Tether Hooks - Translation route tethers and tether hooks shall conform to the requirements in Paragraph 14.4.3.5, EVA Crew Restraint Design Requirements.

14.5.3.4 EVA Airlock Design Requirements

{A}

(Refer to Paragraph 8.10, Hatches and Doors, for additional requirements that may pertain to airlock hatches and doors requirements.)

a. Airlock Hatches - Airlock hatches shall be designed to be operated by a single EVA crewmember.

b. Any tools required for emergency contingency airlock operation shall be located near the airlock.

14.5.3.5 EVA Passageway Design Requirements

{A}

(Refer to Paragraph 8.8.3, Translation Path Design Requirements, for other requirements that may pertain to passageways).

EVA specific passageway design requirements include:

a. Minimum Cross Section - The cross section of EVA passageways shall be based on the maximum width of the largest spacesuited crewmember who will use the passageway.

b. Direction Change - When abrupt changes in direction of travel are necessary, additional volume shall be provided for a change in direction normal to the corridor being traversed.

14.5.3.6 EVA Equipment Transfer Design Requirements

{A}

(Refer to Paragraph 11.8.3.2, Equipment Mobility Aid Design Requirements, for other equipment transfer requirements.)

All loose EVA equipment and EVA cargo shall be provided with attachment points or restraints so that it can be firmly secured or tethered at all times during transfer.

14.6 EVA TOOLS, FASTENERS, AND CONNECTORS

{A }

14.6.1 Introduction

{A}

This section establishes appropriate guidelines for EVA tool and fastener design.

(Refer to Paragraphs 11.2, Tools; 11.9, Fasteners; and 11.10 Connectors, for design considerations and requirements which may be applicable.)

14.6.2 EVA Tools

{A}

14.6.2.1 Introduction

{A}

This section provides the EVA tool design considerations, requirements, and example design solutions.

(Refer to Paragraph 11.2, Tools, for tool design considerations and requirements.)

14.6.2.2 EVA Tools Design Considerations

{A}

a. Successful EVA depends heavily upon the workload of the crewmember. Using motor skills with relatively low loads is suggested. Fine motor activity, particularly motions involving the gloved hand are more difficult.

b. EVA Tools should be operable with one hand.

c. The basic selection or design of EVA tools is dependent upon the nature of the task. Equipment should be designed to use standard tools.

(Refer to Paragraph 11.2.2, Tool Design Considerations, for considerations that may apply to EVA tools).

d. Visibility - Extravehicular mobility unit and structural systems should be designed such that all EVA tools shall be visible during installation, removal, and operations.

14.6.2.3 EVA Tools Design Requirements

{A}

Design requirements that pertain to EVA tools are:

(Refer to Paragraph 11.2.3, Tool Design Requirements, for tool requirements that may be applicable to both IVA and EVA).

a. Throw Angles - Throw angles for EVA ratcheting shall be at least 1.57 rad (90 deg.), and shall allow right- or left-handed operations.

b. Handles - Tool handles shall be designed with a gripping surface which will allow application of up to 20 lbf and 25 ftlb torque without slippage due to grip or damage to the glove due to gripping texture.

c. Access - For EVA gloved-hand access around the tool handle, 7.6 cm (3 in.) of clearance shall be provided (see figure 14.6.2.3-1).

d. Tethering - A means shall be provided on all tools for tethering the tool at all times to prevent inadvertent loss. The design shall be such that the attachment and removal methods permit one-handed operation using pressure suit glove.

e. Battery-Powered Tools - Battery - powered tools shall:

1. support EVA translation with battery packs.

2. provide glove clearances for EVA removal and installation of batteries.

3. protect against safety hazards during EVA removal and installation of batteries.

4. restrain all fasteners used during battery replacement

5. support tethering of tool and batteries.

f.. Battery Packs - Battery powered tools shall be designed so that the battery packs can be replaced at the EVA worksite. Power tools using battery packs shall have a level of charge indicator or an indication as to when a battery pack is required to be replaced.

g. EVA Tool Clearance - EVA tool head clearance requirements are defined in Figure 14.6.2.3-1, except when fasteners are released using a robotic interface.

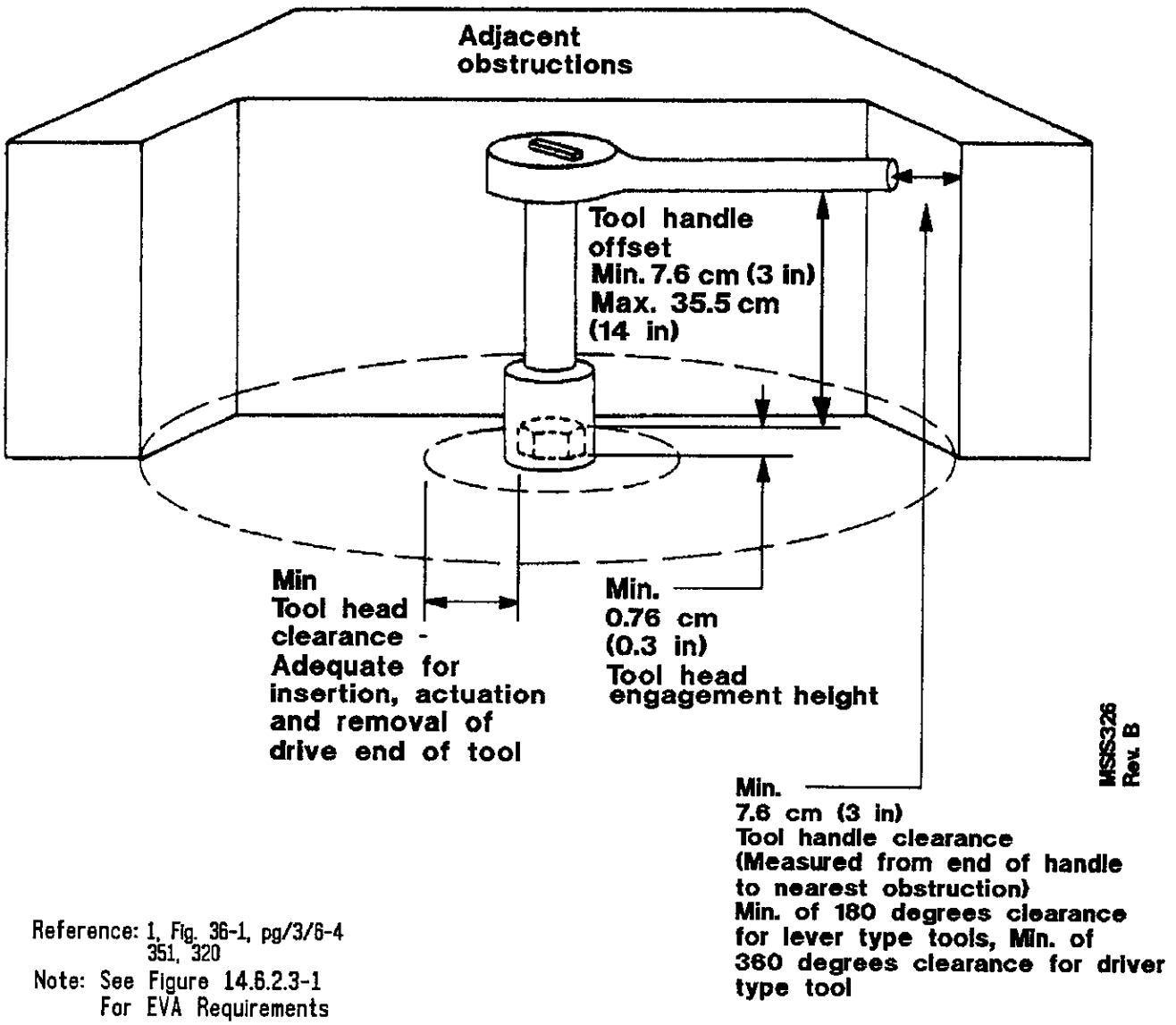

Reference: 1, Fig. 36-1, pg/3/6-4
351, 320
Note: See Figure 14.6.2.3-1
For EVA Requirements

Figure 14.6.2.3-1 Visual and Hand Access for EVA Tools and Required Clearance

14.6.2.4 Example EVA Tools Design Solutions
{OP}

14.6.2.4.1 Example EVA Hand Tool Design Solutions
{A}

Past EVA tool design solutions have ranged from common tools modified for EVA tasks to specialized tools designed for mission-specific tasks.

An example of a tool designed specifically for EVA is an oversized 3/8-inch-drive ratchet. This wrench allows 360 degree ratcheting in either direction with a lever for selection of direction. The tool is equipped with a palm wheel that is turned by hand when over-torquing needs to be avoided, or when resistance is insufficient to operate the ratchet or when used as a speed wrench. The handle is grooved to improve grip and has a tether ring at the end. An illustration of this wrench, along with dimensions and technical information, are given in Figure 14.6.2.4.1-1.

14.6.2.4.2 Example EVA Power Tool Design Solutions
{OP}

The Shuttle EVA power tool is a battery-powered, two-speed, variable torque unit with a 3/8-inch drive adapter fitting for attaching tools such as screwdrivers, sockets, and drill bits. Power is provided by a 7.2 Volt NiCd rechargeable battery that fits into the tool handle. The EVA power tool may be used for EVA tasks that require a tool to make many revolutions with variable speed and torque settings. The EVA power tool is shown in Figure 14.6.2.4.2-1.

14.6.3 EVA Fasteners
{A}

14.6.3.1 Introduction
{A}

This section provides EVA fastener design considerations and requirements.

(Refer to Paragraph 11.9, Fasteners, for fastener design considerations and requirements that may be applicable to both IVA and EVA.)

14.6.3.2 EVA Fasteners Design Considerations
{A}

EVA fasteners should be selected based on hardware structural requirements and the following EVA considerations:

a. Glove Interface - Fasteners should be designed for use with pressurized gloves for on-orbit operations versus bare-hand actuation during ground operations.

b. Hand-Actuated Fasteners - Hand-actuated attach systems (including knobs, levers, latches, rings, clamps), if used for EVA ORU design, should be in compliance with those imposed on IVA hand-actuated fasteners.

c. Dexterity and Torquing Capabilities - Actuation of fasteners during EVA is accomplished by a crewmember in a pressurized suit. Pressure suit gloves reduce the dexterity and torquing capabilities compared to bare hand capability.

d. Visual Accessibility - EVA actuated fasteners/ devices should be visually accessible to ensure proper seating or restraint in stowed or installed location.

e. Size - Large fasteners and knobs up to 5.1 cm (2 in) diameter are easier to operate with a pressurized gloved-hand. The inability of the crewmember to feel the fasteners makes them more difficult to grip and use.

f. Captive/Noncaptive Fasteners - Tool-operated fasteners (captive and noncaptive) used on space module equipment should have the sacrificial portions of a fastener attached to the ORU side of the interface.

Technical information	
Part number	ESEX-82-27-10/ILC 10181-10023-01
Weight	0.63 kg (1.38 lb)
Material/ construction	Aluminum, tether ring on handle Grooved handle with holes
Temperature	−73 deg to 93 deg C (−100 deg to 200 deg F)

Dimensional data	
A	26.04 cm (10.25 in)
B	8.89 cm (3.50 in)
C	15.24 cm (6.00 in)
D	3.81 cm (1.50 in)
E	1.91 cm (0.75 in)

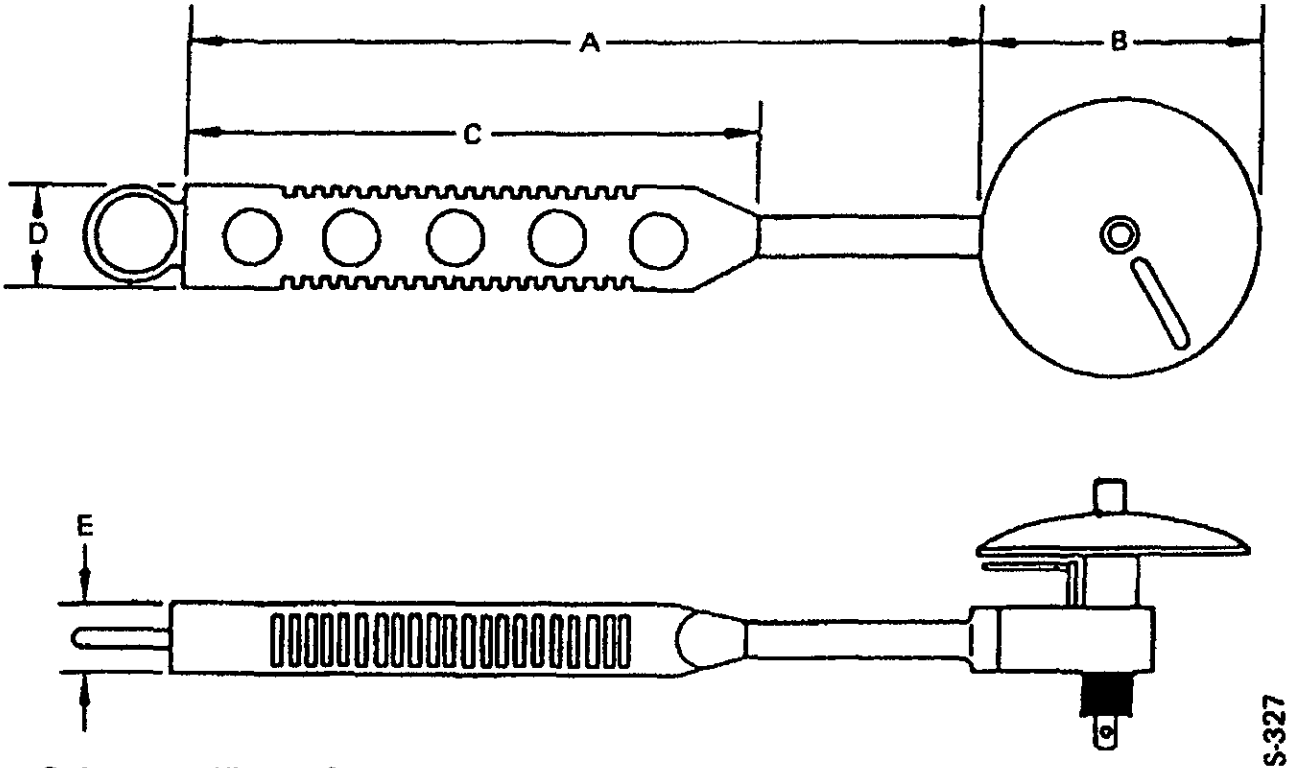

Reference: 145, Page 3-10

Figure 14.6.2.4.1-1. STS EVA Rachet Wrench as an Example Design Solution to EVA Tool Design Requirements

Technical information	
Part number	10172-20500-01
Weight	1.24 kg (2.74 lb)
Material/ construction	Case — glass-filled lexan body, polyimide gear housing covered with reflective aluminum tape Battery pack — 7.2 V NiCd
Speed	58 rpm, 101 rpm
Direction	Forward/reverse (tighten/loosen)
Capacity	375 to 450 screws/battery pack

Torque control value N-m (in-lb)

	Position	Tighten N-m	Tighten (in-lb)	Loosen N-m	Loosen (in-lb)
58 rpm	1	106	(15)	106	(15)
	2	205	(29)	191	(27)
	3	381	(54)	282	(40)
	4	1172	(166)	1059	(150)
101 rpm	1	71	(10)	85	(12)
	2	184	(26)	141	(20)
	3	290	(41)	240	(34)
	4	1356	(192)	1236	(175)

Dimensional data	
A	16.51 cm (6.50 in)
B	29.85 cm (11.75 in)

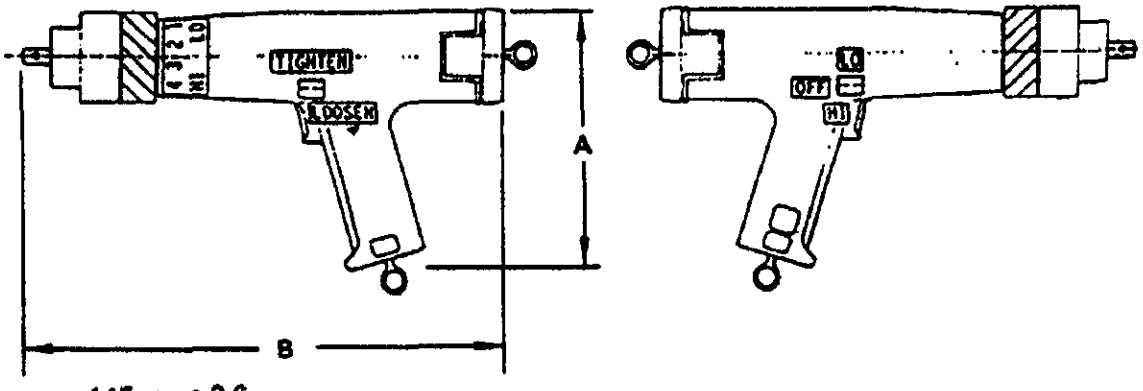

Reference: 145, page 3-6

MSIS-328

Figure 14.6.2.4.2-1. STS EVA Power Tool

g. Torque Tip - Torque set, recessed, Phillips, and slotted-type fasteners should not be used.

h. Sizes - Minimize different sizes of fasteners and variation of drive depths.

i. Locks - Use self-locking feature on all fasteners.

(Refer to Paragraph 11.9.2, Fastener Design Considerations, for other considerations that pertain to fasteners.)

14.6.3.3 EVA Fasteners Design Requirements

{A}

The following requirements pertain to EVA fasteners:

a. EVA Fastener Size - The minimum size of fasteners, knobs, and head size for space-suited hand operation shall be 3.8 cm (1.5 in.) diameter and 1.9 cm (0.75 in.) high. Maximum EVA fastener size shall not exceed the grasp capabilities of the smallest EVA crewmember.

b. Captive - Captive fasteners shall be used wherever possible. Where existing hardware or other factors preclude captive fasteners, special provisions for captive devices shall be made.

c. Indication of Status - EVA actuated fasteners/devices shall be verifiable/visually accessible to ensure proper seating or restraint in stowed or installed locations.

d. Contingency Operation - All EVA hand-actuated rotational fasteners shall be provided with either an internal or external hexagonal feature for contingency operation with a hand tool.

e. Fastener Heads - EVA-operable bolt fasteners shall not require a push force to remain engaged with tool. EVA fasteners operated by hand or power tool shall have a double-height Hex-head bolt head.

(Refer to Paragraph 11.9.3, Fastener Design Requirements, for additional requirements.)

f. Cotter Keys - Cotter keys shall not be used EVA.

14.6.4 EVA Connectors

{A}

14.6.4.1 Introduction

{A}

This section provides EVA connector design considerations and requirements.

(Refer to Paragraph 11.10, Connectors, and sub- paragraphs for connector design considerations and requirements).

14.6.4.2 EVA Connectors Design Considerations

{A}

EVA connectors should be designed based on the following:

a. Clearance - Sufficient clearance should be allowed around the connector for access by a space suit gloved hand. Otherwise, additional provisions should be made to access connector.

b. Mate/Demate - Design limits should be placed on the torque required to mate/demate connectors, and connector type and spacing.

(Refer to Paragraph 11.10.2, Connector Design Considerations, for additional considerations.)

14.6.4.3 EVA Connectors Design Requirements

{A}

The following requirements pertain to EVA connectors:

a. Clearance - Clearance shall be provided for gloved- hand operation of connectors as shown in Figure 14.6.4.3-1.

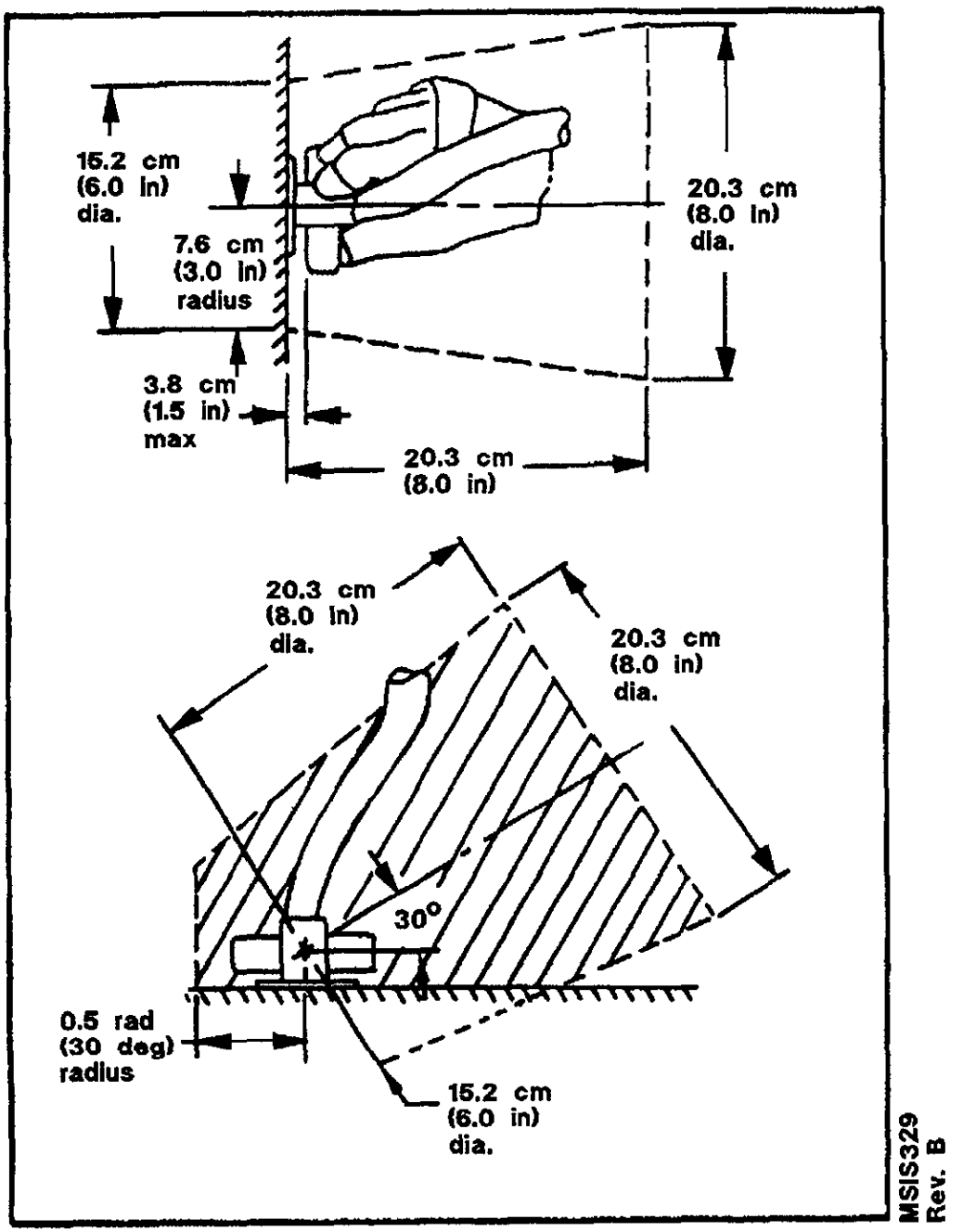

Reference: 253, Fig. 2.4-4, pg. 2-6
320, Kosmo

Figure 14.6.4.3-1 Typical EVA Gloved Hand Clearances Required for Wing Tab Connectors

b. Wing Connectors - EVA wing connectors, similar to Figure 14.6.4.3-2, shall be used wherever appropriate. Wing length shall be proportional to the torque required.

c. Multiple Connectors - Clearance between single and staggered rows of connectors shall be at least 3.8 cm (1.5 in.) as shown in Figure 14.6.4.3-3.

d. Pressure - Pressurized pneumatic connectors and lines shall be tethered or otherwise captured to the main structure.

d. Spacing - Spacing of connectors shall allow the gloved hand access to the connector in all directions.

e. Status - Methods such as visual indications, shall be provided to indicate connector mating status.

f. Pressure - Pressurized pneumatic connectors and lines shall be tethered or otherwise captured to the main structure.

g. Protecting Caps - All connector protective caps shall be tethered in the proximity of the connector.

h. Strain Relief - Strain relief shall be provided to prevent inadvertent breakage due to induced loads.

i. Alignment - All connectors shall have provisions to ensure proper alignment during mating and demating and visible alignment markings.

j. Scoop Proof - All connectors shall be scoop proof. Scoop Proof refers to the impossibility of a mating receptacle connector being inadvertently cocked into a mating plug and damaging or electrically shorting the contacts.

k. Mate/Demate - The actuation force to mate or demate an electrical or fluid connector shall not exceed 4 Nm (35 in/lb) for the preferred diameter of 5.75 cm (2.25 in.) for connectors.

l. Electrical Hazards - All electrical connectors shall have provisions for alignment and mating of connector shells prior to electrical path connections. Electrical paths shall be broken prior to connector disconnections.

(Refer to Paragraph 11.10.3, Connector Design Requirements, for additional information applicable to both EVA and IVA connectors.)

14.7 EVA ENHANCEMENT SYSTEMS

{A}

14.7.1 Introduction

{A}

This section provides basic guidelines for EVA enhancement systems. Enhancement systems in this context are defined as specialized equipment or systems used to aid the EVA crewmembers in the performance of their tasks. Examples of STS EVA enhancement systems are also included in this section.

14.7.2 EVA Enhancement Systems Design Considerations

{A}

EVA enhancement systems are specialized systems or equipment designed to aid the EVA crewmembers in the performance of their tasks. For example, the Orbiter's remote manipulator arm with the MFR, and the manned maneuvering unit are STS EVA enhancement systems.

When appropriate, crew aids such as handrails, handholds, tethering devices, and foot restraints should be incorporated into the design of EVA enhancement systems.

EVA enhancement equipment should incorporate mounting interface design features compatible with crew-imposed loads resulting from inadvertent impact and/or from the operation of crew aids.

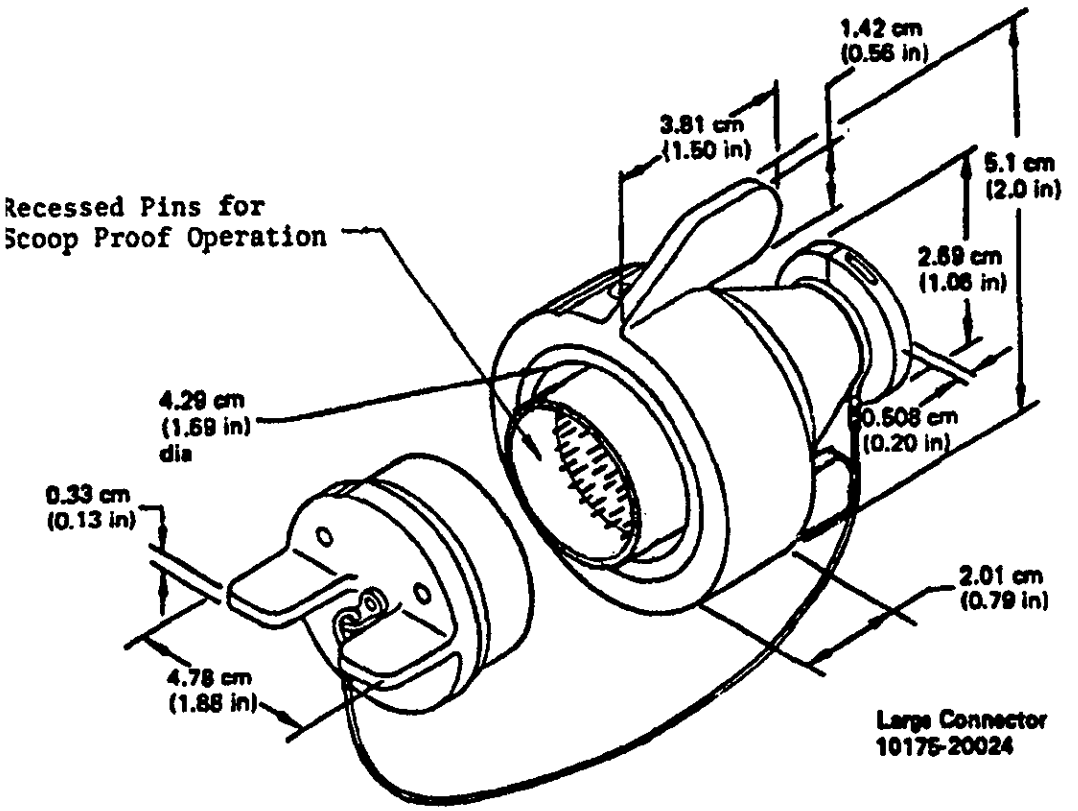

Reference: 320

Figure 14.6.4.3-2. EVA Wing Tab Connector (Large Size)

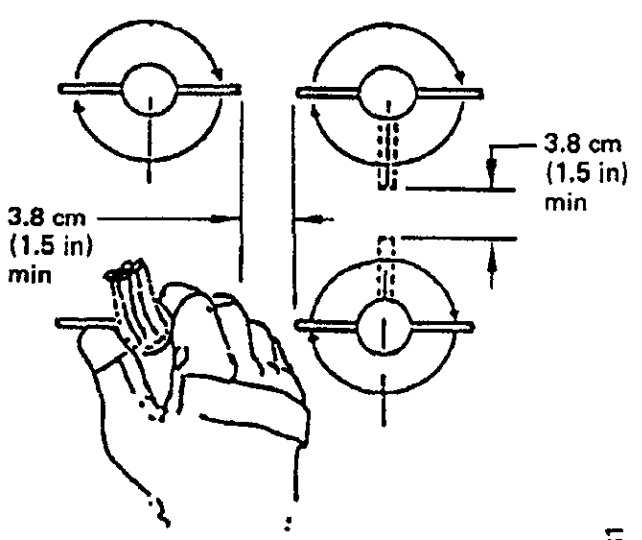

Reference: 253, Figure 2.4-2, page 2-5

Figure 14.6.4.3-3. Minimum Clearance Between Wing Tab Connectors

14.7.3 EVA Enhancement Systems Design Requirements

{A}

EVA Enhancement systems shall have safety tether attachments between the EVA crewmember and the enhancement system and or between the enhancement and the main space module, except for free-flying mobility units or surface rover.

14.7.4 EVA Enhancement Systems Example Design Solutions

{A}

Example design solutions for STS EVA enhancement systems are given in this section.

14.7.4.1 Manned Maneuvering Unit (MMU)

{A}

The MMU is a modular self-supporting backpack, containing its own electrical power, propulsion system, and controls. It readily attaches to the EMU and can be donned, doffed, and serviced by one EVA crewmember for use as required during a nominal EVA. It has complete 6-DOF (degrees of freedom) control and automatic attitude hold capability. It provides attachment points for the use of ancillary equipment.

The MMU is used to increase the EVA crewmember's mobility to other portions of the space module, to appendages of payloads protruding from the cargo bay, or to other space modules. It can be modified to carry cargo of moderate size, to stabilize satellites, to retrieve small free-flying payloads, and to provide remote inspection photography/television of operations. MMU dimensions and technical data are provided in Figure 14.7.4.1-1.

The following design considerations are for any EVA manned maneuvering system.

a. The manned maneuvering vehicle should accommodate the full range of space suit sizes.

b. Six degrees-of-freedom of simultaneous maneuvering capability is required in any combination of axes.

c. The acceleration levels provided by the maneuvering vehicle must be compatible with mission requirements and crew comfort levels.

d. Automatic attitude hold is required to allow the pilot to maintain a fixed position in the rotational axes.

e. The vehicle design shall minimize crew time to operate the MMU systems while accommodating the pressure suit design.

14.7.4.2 Remote Manipulator System (RMS)

{O}

The STS RMS, as an available orbiter payload standard service, is mounted on the portside of the Orbiter cargo bay. The arm length from the shoulder is 50 feet, and 6 degrees of manipulator freedom are provided through joints at the shoulder, elbow, and wrist. A second RMS can be mounted on the starboard side.

The RMS has been used as a Shuttle support system in satellite servicing.

RMS capabilities include:

a. Deploying and releasing payloads.

b. Capturing and retrieving non spinning satellites through mechanical interface.

c. Supporting space module servicing by maneuvering crewmembers and positioning workstations, and transferring equipment.

d. Handling modules unsuitable for crewmember handling (size, inertia, radioactive, etc.).

e. Use in remote servicing.

Technical information	
Part number	852MU000000
Weight	153 kg (338 lb)
Material	Aluminum
Control	Three modes of operation - normal, satellite stabilization, and axis inhibit Automatic attitude hold is available in all three modes Left hand controller - 3DOF translation Right hand controller - 3DOF rotation Translation acceleration - approximately 0.07 to 0.11 m/sec^2 (0.24 to 36 ft/sec^2) Rotational acceleration 6 to 14 deg/sec^2 Redundant logic
Maximum range	Early flights - approximately 91 m (300 ft) Potential - approximately 914 m (3000 ft)
Electrical power	Two batteries: total power - 852 W-hr
Propellant	Gaseous nitrogen 12 kg at 20,680 Kp (26 lb at 3000 psig) Reservicing in less than 10 min
Stowage	Forward cargo bay (bay 1) in its own FSS

Dimensional data	
A	127.0 cm (50.0 in)
B	84.6 cm (33.3 in)
C	68.6 cm (27.0 in)
D	121.9 cm (48.0 in)

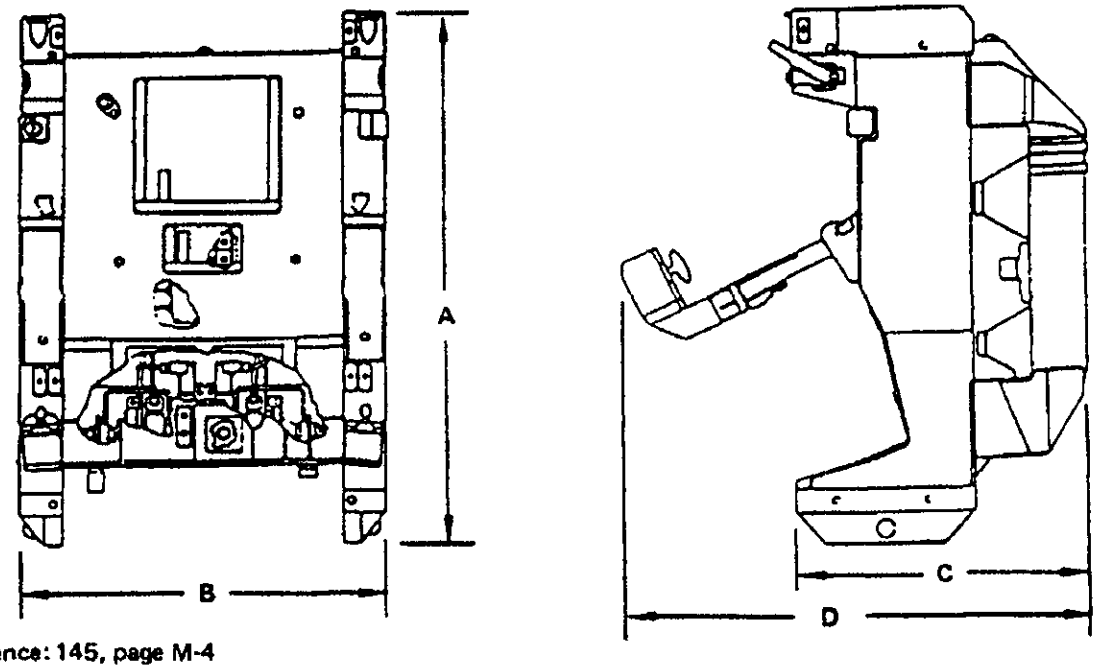

Reference: 145, page M-4
320, McBarron

MSIS-332

Figure 14.7.4.1-1. Manned Maneuvering Unit (MMU)

The RMS television camera and light located near the end effector can be used to enhance EVA capabilities.

14.7.4.3 Manipulator Foot Restraint (MFR)

{O}

The MFR is a crewmember restraint device and work- station which is grappled by the remote manipulator system. The MFR provides translation, positioning, and restraint in cargo bay worksites within reach of the RMS for EVA crewmembers. Positioning of the MFR is by voice link with the RMS operator in the cabin. A safety tether is attached to the foot restraint platform for crewmember use. Several parts of the MFR rotate to provide a wide range of crewmember motion.

The MFR also provides for tool stowage. Tool stowage consists of a standard interface for a tool board on which a variety of hand tools or parts can be attached.

Figure 14.7.4.3-1 provides the MFR dimensions and technical data.

Technical information	
Part number	SED33103150-305
Weight	46 kg (102 lb)
Material	Primarily aluminum
Rotation of MFR base including vertical stanchion	±180 deg with locking in 45 deg increments
Tilt of stanchion away from crewmember	27 deg forward with locking in 9 deg increments
Rotation of work station about vertical stanchion axis	±180 deg with locking in 45 deg increments
Rotation of foot platform independent of base	Continuous 360 deg with locking in 30 deg increments
Stowage	Cargo bay, attached to APC

Dimensional data	
A	63.5 cm (25.0 in)
B	156.2 cm (61.5 in)
C	35.6 cm (14.0 in)
D	52.1 cm (20.5 in)
E	36.8 cm (14.5 in)
F	20.3 cm (8.0 in)
G	133.4 cm (52.5 in)

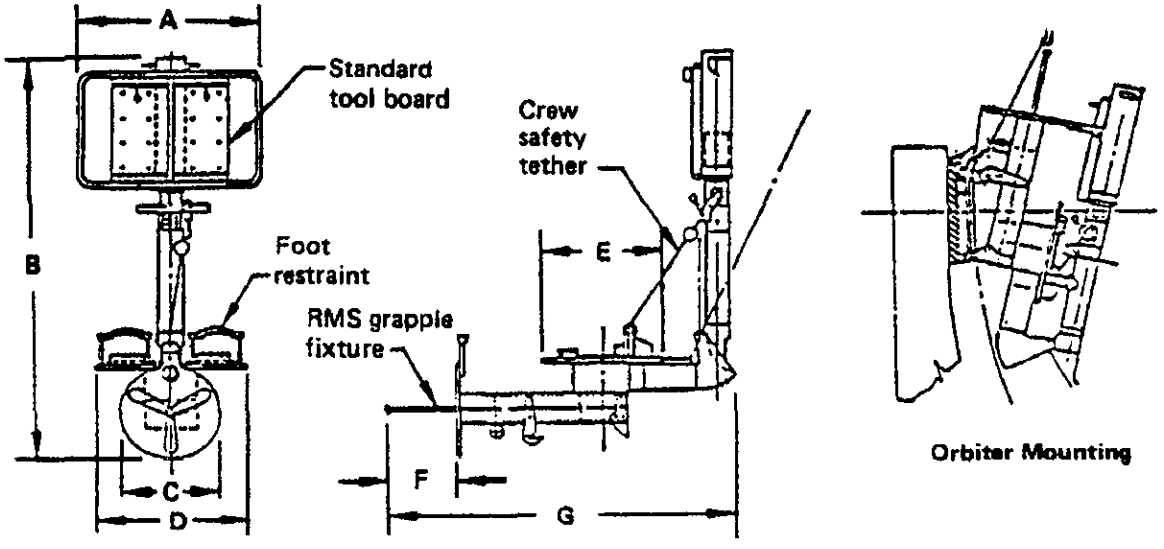

Reference: 145, page M-2

MSIS-333

Figure 14.7.4.3-1. Manipulator Foot Restraint (MFR)

MAN-SYSTEMS INTEGRATION STANDARDS

NASA-STD-3000
VOLUME II

REVISION B
JULY 1995

NASA
National Aeronautics and
Space Administration

FOREWORD

This is Volume II of the Man-Systems Integration Standards (MSIS) prepared for the National Aeronautics and Space Administration (NASA) The MSIS consists of a family of documents with a video tape as an adjunct . Each document volume has a specific purpose, as stated below, and each has been assembled from the data contained in Volume I.

The title and scope of each current volume are given below:

Volume I - Man Systems Integration Standards

This document contains man-systems integration design considerations, design requirements, and example design solutions for development of manned space systems. This is a NASA-level standards document applicable to all manned space programs including NASA, military, and commercial programs.

Volume II - Man-Systems Integration Standards - Appendices

This volume contains the appendices which pertain to the MSIS, and is organized as follows:

Appendix A	Bibliography
Appendix B	Paragraph References
Appendix C	Glossary
Appendix D	Abbreviations and Acronyms
Appendix E	Units of Measure and Conversion Factors
Appendix F	Not Applicable
Appendix G	Acceleration Regime Applicability
Appendix H	Video Tape User's Guide
Appendix I	Not Applicable
Appendix J	Keywords
Appendix K	MSIS Recipients Listing

Volume III - Man-Systems Integration Standards - Design Handbook

This volume is a condensed field guide of pertinent quantitative data extracted from Volume I.

Chapters of the MSIS family of documents are as follows:

1. Introduction
2. General Requirements
3. Anthropometry and Biomechanics
4. Human Performance Capabilities
5. Natural and Induced Environments
6. Crew Safety

7. Health Management
8. Architecture
9. Work stations
10. Activity Centers
11. Hardware and Equipment
12. Maintainability
13. Facility Management
14. Extravehicular Activity

Volume IV - Space Station Man-Systems Integration Standards

This volume underwent many changes as we phased into the International Space Station Alpha (ISSA) program. A smaller volume was developed from Volume IV and published as an ISSA document entitled **International Space Station Flight Crew Integration Standard (NASA-STD-3000/T)** with ISSA document number **SSP-50005**. This document will be maintained by the ISSA publishing operations in Interleaf format. The contents of the SSP-50005 document will be monitored and controlled by the ISSA Flight Crew Support and Integration Team.

Volume V - STS Man-Tended Payload Man-Systems Integration Standards

Deleted.

Volume VI - Assured Crew Return Vehicle Man-Systems Integration Standards

This document served as the Assured Crew Return Vehicle (ACRV) project man-systems integration design requirements. The data in this document is a subset of the data found in Volume I and defines the requirements which were pertinent to the ACRV as defined in the ACRV documentation. Additional data and guidelines were provided to assist in the design. The data contained in this volume which is pertinent to the International Space Station Alpha (ISSA) has been incorporated into ISSA document SSP-50005.

The original MSIS document was assembled for NASA by the Boeing Aerospace Company (BAC), Kent, Washington, in conjunction with subcontractors Lockheed Missiles and Space Company (LMSC), Sunnyvale, California; Essex Corporation, Huntsville, Alabama; and CAMUS, Inc., Springdale, Arkansas. The contractor team leaders and section authors for this effort are listed in Figure F-1. Subsequent iterations to the MSIS will be developed for NASA by the custodial organization at JSC.

A Government\Industry Advisory Group (GIAG), composed of a panel of "Experts" and "Users", met four times to review the technical content as it was being developed.

The six GIAG Experts were as follows:

Julien M Christensen (PhD) - Chief Scientist, Human Factors, Universal Energy Systems, Inc., Dayton, Ohio.

James W. McBarron - Chief, Shuttle Support Branch, Crew Systems Division, NASA-Johnson Space Center, Houston, Texas.

John T. McConville (PhD) - President, Anthropology Research Project, Inc, Yellow Springs, Ohio.

William R. Pogue - Ex-Skylab astronaut, CAMUS, Inc., Springdale, Arkansas.

Robert C. Williges (PhD) - Prof. of Industrial Engineering and Operations Research/Prof. of Psychology, Virginia Polytechnic Institute, Blacksburg, Virginia.

Wesley E. Woodson - President and Research Director, Man-Factors, Inc., El Cajon, California.

The GIAG User group was composed of invited representatives form all of the prime aerospace contractors, support contractors, NASA centers and Headquarters, other Government agencies, and some non-aerospace contractors. The GIAG Users who participated in at least one of the GIAG meetings are listed in Figure F-2.

The technical content of these documents has been thoroughly reviewed by the GIAG participants. The data can be used with confidence that all known relevant human engineering requirements applicable to the space environment have been documented and are as technically valid as it is possible to determine. Iterations to the MSIS will be developed as physiological and technical knowledge and requirements dictate.

Comments from any user are welcome and will be considered for updating the database and the documentation. A Recommendations and Comments form appears at the end of this volume to facilitate user inputs.

Figure F-1

Contractor Team and Topic Assignments

BOEING AEROSPACE COMPANY		
Charles W. Geer	Program Manager	
Keith H. Miller	Technical Leader/Editor-in-Chief	
	1.0	Introduction
	2.0	General Requirements
	6.0	Crew Safety
(Robert Horne)	11.0	Hardware and Equipment
	13.0	Facility Management
	Vol. 2	Appendix
Eric Liening/Han Peters	5.1	Atmosphere
	5.8	Thermal Environment
Patrick Cornelius/Keith Miller	5.2	Microgravity
	5.3	Acceleration
	5.9	Combined Environmental E
Charles Wright	5.4	Acoustics
	5.5	Vibrations
Eugene Normand	5.7	Radiation
Ethel E. Erickson		SDMS Data Entry and Proofreading
LOCKHEED MISSILES & SPACE COMPANY		
Dr. David Regal	Subcontract Technical Leader	
	4.0	Human Performance Capabilities
	9.0	Workstations
Barry Tillman	3.0	Anthropometry and Biomechanics
	7.0	Health Management
	8.0	Architecture
	10.0	Activity Centers
Stuart Parsons/David Regal	12.0	Design for Maintainability
ESSEX CORPORATION		
Nicholas Shields	Subcontract Technical Leader	
	14.0	Extravehicular Activity (EVA)

Figure F-2

Government/Industry Advisory Group
User Group
(Attended One or More of the GIAG Meetings)

Cletis Booher	NASA - Johnson Space Center
Gerald Carr	CAMUS, Inc
Gerald Chaikin	Chief, HEL Detachment, MICOM
Bryant Cramer	NASA Headquarters
T. Lee Doolittle	University of Washington
Capt. Vance Gilstrap	USAF Space Division
Rob Gray	ILC Dover
Richard F. Haines	NASA - Ames Research Center
Lt. Cdr. Steve Harris	Naval Air Test Center
Marion Hix	NASA - Goddard Space Flight Center
Capt. David Hoerr	NASA - Johnson Space Center
Marshall W. Horton	NASA - Johnson Space Center
Gary A. Johnson	McDonnell Douglas Astronautics Company
Neil A. Johnson	United Airlines Aircrew Training Center, Inc.
Rod Jones	NASA - Johnson Space Center
Joseph P. Joyce	NASA - Lewis Research Center
Mary M. Jurmain	Technology Inc.
Robert Kain	NASA - Johnson Space Center
Robert Kerle	Grumman Aerospace Corp.
Dave Kissinger	NASA - Johnson Space Center
Joseph J. Kosmo	NASA - Johnson Space Center
Ronald V. Kruk	CAE Electronics Ltd.
Lynn L. Lally	Lockheed Emsco
Pieter Lammers	European Space Agency
William A. Langdoc	NASA - Johnson Space Center
John Lauffer	Rocketdyne Corp.
Joel H. Leet	NASA - Kennedy Space Center
Charles M. Lewis	NASA - Marshall Space Flight Center
James L. Lewis	NASA - Johnson Space Flight Center
James S. Logan M.D.	NASA - Johnson Space Center

Figure F-2 (Continued)

Government/Industry Advisory Group

User Group
(Attended One or More of the GIAG Review Meetings)

Mike Lounge	NASA - Johnson Space Center
Don B. Morris	Rockwell International
Debra Muratore	Mitre Corporation
Melinda H. Naderi	NASA - Marshall Space Flight Center
D. C. Nagel	NASA - Ames Research Center
George Nelson	NASA - Johnson Space Center
Bob Overmyer	Martin Marietta Corp.
Stuart Parsons	Lockheed Missiles and Space Company
Virgil A. Paull	Martin Marietta Corp.
Maj. John C. Pellosie	USAF AAMRL/HEG
Martin Pollack	Grumman Aerospace Corp.
Larry Price	McDonnell Douglas Astronautics
A. M. Lex Ray	Martin Marietta
John A. Roebuck	Rockwell International
Dane Russo	Northrup Services
Patricia Santy, M.D.	NASA - Johnson Space Center
Richard Sauer	NASA - Johnson Space Center
R. W. Scarlata	General Electric
Gerald Shinkle	NASA - Johnson Space Center
Daniel H. Spoor, M.D.	Technology Inc.
Jack Stokes	NASA - Marshall Space Flight Center
Earl Switzer	Arinc Research Corp.
Allen B. Thompson	Martin Marietta - Denver
Robert Trevino	NASA - Johnson Space Center
Conway Underwood	Boeing Aerospace Company
Frank Welman	Arinc Research Corp.
Charles Wheelwright	NASA - Johnson Space Center
H. Eugene Winkler	NASA - Johnson Space Center
Harry L. Wolbers	McDonnell Douglas Astronautics Company
Maj. Lynn Woolard	NASA - Kennedy Space Center
Barbara Woolford	NASA - Johnson Space Center

CONTENTS

APPENDIX A	BIBLIOGRAPHY	A-1
APPENDIX B	PARAGRAPH REFERENCES	B-1
APPENDIX C	GLOSSARY	C-1
APPENDIX D	ABBREVIATIONS AND ACRONYMS	D-1
APPENDIX E	UNITS OF MEASURE AND CONVERSION FACTORS	E-1
APPENDIX F	UNRESOLVED DATA PROBLEMS AND ISSUES (TBD)	F-1
APPENDIX G	ACCELERATION REGIME APPLICABILITY	G-1
APPENDIX H	VIDEOTAPE USER'S GUIDE	H-1
APPENDIX I	STANDARDS DATABASE (TBD)	I-1
APPENDIX J	KEYWORDS	J-1
APPENDIX K	MSIS RECIPIENTS	K-1

APPENDIX A

BIBLIOGRAPHY

USER'S GUIDE

This bibliography includes all of the human engineering standards, data books, and technical documents that were reviewed to obtain the man-systems integration design considerations, requirements, and examples given in this document. The references that are cited as source documents for either the text or figures are noted by having an asterisk located after the reference number. Those references that are not so notated were given due consideration but found not to have data appropriate for these standards.

In the following listing, the reference citation is as follows:

Reference No.
Document No.
Used by Originator
Author (if cited)
Document Title
(Document Title Line 2, if required)
Prepared by
Published by
Publication Date

Note on Applicable Revisions - Whenever a reference document is cited in the REQUIREMENTS paragraphs, the specific document revision cited in this Appendix A is the only version to be used even though there may be later revisions than the one cited.

1 * MSFC-STD-512A, Stokes, J.W. ,Man/System Requirements for Weightless Environments Airesearch Mfg. Co., NASA-MSFC, 11/25/76

2 * MIL-STD-1472C, Notices 1 and 2 Human Engineering Design Criteria for Military Systems, Equipment and Facilities, DOD, C Revision 05/02/81, (Notice 3 3/17/87)

3 * JSC-07387B ,Langdoc, W.A. ,Crew Station Specifications, (Refer to references 193 thru 202 for specifications contained herein), NASA-JSC 5-6-3

4 * D180-19063-1, Farrell, R.J., Booth, J.M. ,Design Handbook for Imagery Interpretation Equipment Boeing Aerospace Co., 2-84

5 * MSFC-STD-267, A Human Engineering Design Criteria, NASA-MSFC, 09-23-66

6 * ED-2002-210 , Tobias, L. Apollo Applications Program Payload Integration Technical Study and Analysis Report, Bendix Corp., 11/30/67

7 * JSC-14581, Griffin, B.N. , The Influence of Zero-g and Acceleration on the Human Factors of Spacecraft Design , NASA-JSC, 8-78

8 * HEL STD 5-6-66 , Chaillet, R.F., Honiafeld, A.R. , Human Factors Engineering Design Standard for Wheeled Vehicles (Superseded by MIL-HDBK-759, Ref. 15), Tech Spec Office/Systems Res. Lab, ARMY-HEL, 9-66

9 * NASA CR-1205(I), Roth, E.M., Compendium of Human Responses to the Aerospace Environment:, Volume I , Lovelace Foundation for Med Ed & Resch., NASA, 11-68

10 * NASA CR-1205(II), Roth, E.M. , Compendium of Human Responses to the Aerospace Environment: Volume II , Lovelace Foundation for Med Ed & Research, NASA, 11-68

11 * NASA CR-1205(III) Roth, E.M. , Compendium of Human Responses to the Aerospace Environment: Volume III, Lovelace Foundation for Med Ed & Research, NASA, 11-68

12 White, R.M. , Anthropometric Survey of the Armed Forces of the Republic of Vietnam, U.S. Army Natick R&D Laboratories, Adv. Res. Proj. Agency, 10-64

13 MIL-STD-1333A , Aircrew Station Geometry for Military Aircraft Naval Air Systems Command, DOD, 06/30/76

14 DOD-HDBK-743, Anthropometry of U.S. Military Personnel, U.S. Army Natick R&D Laboratories, DOD, 10/03/80

15 * MIL-HDBK-759A (MI), Human Factors Engineering Design for Army Material, U.S. Army Human Engineering Lab, DOD, 6-30-81

16 * NASA RP 1024, Anthropometric Source Book: Volume 1: Anthropometry for Designers Anthropology Staff/Webb Associates, NASA, 7-78

17 * NASA TM X-62, 101, Haines, R.F., Barrt, A.E., Zahn, J.R., Cederwall, F.T., Human Performance Capabilities in Simulated Space Station Concordia College, San Jose State, NASA-ARC 1-72

18 * AFSC DH 1-2 ,General Design Factors Dept. of the Air Force, HQ A/F Systems Command, 02/20/74

19 * AFSC DH 1-3, Human Factors Engineering Dept. of the Air Force, HQ A/F Systems Command, 01/01/72

20 AFSC DH 1-5, Environmental Engineering Dept. of the Air Force ,HQ A/F Systems Command, 03/10/74

21 * AFSC DH 1-6, System Safety Dept. of the Air Force HQ A/F Systems Command, 12/20/78

22 * AFSC DH 2-2 ,Crew Stations and Passenger Accommodations Dept. of the Air Force, HQ A/F Systems Command, 05/01/72

23 AMRL-TR-69-6 , Alexander, M., Garrett, J.W., Flannery, M. P., Anthropometric Dimensions of A/F Pressure-Suited Personnel for Workspace and Aerospace, Medical Research Laboratory Air Force Systems Command, 8-69

24 * NHB 8060.1B , Flammability, Odor Offgassing Requirements and Test Proc. for Materials in Environment Office of Space Transportation Systems Office of Space Transportation Systems, NASA, 9-81

25 * MIL-A-8806A, Acoustical Noise Level in Aircraft, General Specification for DOD, 07/11/66

26 MIL-STD-783B, Legends for Use in Aircrew Stations and on Airborne Equipment DOD, 10/31/69

27 MIL-C-8779D, Colors, Interior, Aircraft, Requirements for DOD, 08/23/71

28 MIL-M-18012B, Markings for Aircrew Station Displays, Design and Configuration of DOD, 07/20/64

29 * MIL-S-008806B, Sound Pressure Levels in Aircraft, General Specification for Dept. of the Air Force, 09/21/70

30 MIL-STD-411D, Aircrew Station Signals Naval Air Systems Command DOD, 06/30/70

31 MIL-STD-203F, Aircrew Station Control and Displays: Assignment Location and Actuation of, for Fixed Wing Naval Air Systems Command DOD, 12/28/73

32 MIL-L-5667B, Lighting Equipment, Aircraft Instrument Panel: General Specification for Installation of USAF, 02/04/64

33 MIL-L-18276C, Lighting, Aircraft Interior, Installation of DOD, 06/19/64

34 MIL-STD-12D, Abbreviations for use on Drawings Specifications, Standards and in Technical Documents, U. S. Army Armament R&D Command DOD, 06/15/68

35 D-NA-0002, Procedures and Requirements for Flammability and Offgassing Evaluation Manned Spacecraft Nonmetallic Materials, NASA/JSC, 07/18/68

36 * AFFDL-TR-70-174, Semple, C.A., Heapy, R.J., Conway, E.J., Burnette, K.T., Analysis of Human Factors Data for Electronic Flight Display Systems, Manned Systems Sciences, Inc., A/F Flight Dynamics Lab

37 * TBD , Space Station Human Productivity Requirements, Lockheed, NASA/JSC

38 AFR 161-35 Briftofd, D. , Hazardous Noise Exposure, HQ AFMSC/SGPA HQ AFMSC/SGP, 04/09/82

39 MIL-STD-740B, Airborne and Structureborne Noise Measurements and Acceptance Criteria of Shipboard Equipment ,NAVY - SH USN, 01/13/65 (This standard was superseded by MIL-STD-740-1, Airborne Sound Measurements and Acceptance Criteria of Shipboard Equipment, and MIL-STD-740-2, Equipment Structureborne Vibratory Measurements and Acceptance Criteria of Shipboard Equipment, 12/30/86).

40 MIL-T-23991T, Training Devices, Military: General Specification for, NAVY (TD) DOD, 02/20/74

41 MIL-STD-195, Marking of Connections for Electric Assemblies Office of Assistant Secretary of Defense, DOD, 10/20/55

42 * NASA CR 3857, Peerly, R.L. Jr., Rockoff, L.A., Raasch, R.F., Space Station Crew Safety Alternatives Study - Final Report, Rockwell Intl. , NASA-Langley Research Center, 6-85

43 Fed. Std. No. 3, Colors, Aeronautical Lighting Federal Supply Services, GSA, 08/27/51

44 * MIL-A-25165B, Aircraft Emergency Escape System, Identification of Bureau of Naval Weapons, DOD, 10/05/64

45 MIL-C-25050, A Color, Aeronautical Lights and Lighting Equipment, General Requirements for Bureau of Naval Weapons, DOD, 12/02/63

46 MIL-STD-45662 Calibration Systems Requirements Dept. of the Army - MI DOD 06/10/80

47 * MIL-I-38038A Instrument Lighting System, Electro-Luminescent, General Specification for USAF 02/13/63

48 MIL-L-006730C Lighting Equipment; Exterior, Aircraft, General Requirements for Naval Air Systems Command Dept. of Navy 05/17/71

49 MIL-L-25467D Lighting, Integral, Red, Aircraft Instrument, General Specification for Naval Air Systems Command DOD 06/12/77

50 * MIL-L-27160C Lighting, Instrument, Integral, White, General Specification for USAF USAF 07/31/75

51 MIL-P-21563B Paint System, Fluorescent, for Aircraft Application Bureau of Naval Weapons DOD 12/11/62

52 MIL-P-7788E Panels, Information, Integrally Illuminated Naval Air Systems Command DOD 04/16/79

53 MIL-STD-1180A, Safety Standards for Military Ground Vehicles, U.S. Army Tank-Automotive Command, DOD, 01/26/83

54 MIL-STD-1280, Keyboard Arrangements U.S. Army Electronics Command, DOD, 01/28/69

55 MIL-STD-1348 Knobs, Control, Selection of Naval Electronic Systems Command DOD 07/30/69

56 MIL-STD-143B Standards and Specifications, Order of Precedence for the Selection of Aeronautical Systems Division, DOD, 11/12/69, (This standard was superseded by MIL-STD-970, Standards and Specifications, Order of Preference for the Selection of Aeronautical Systems Division, 10/1/87).

57 MIL-STD-1473A, Standard General Requirements for Color and Marking of Army Material, Dept of the Army (MI), DOD, 02/10/76

58 * MIL-STD-1474B, Noise Limits for Army Material US Army-Missile Research and Dev. Command, DOD, B Revision, 06/18/79 (Notice 2 - 04/20/84)

59 MIL-HDBK-141, Optical Design Defense Supply Agency, DOD, 10/05/62

60 NASA SP-7, Dictionary of Technical Terms for Aerospace Use Scientific & Technical Information Div., NASA

61 * ANSI S1.1-1960, Acoustical Terminology Acoustical Society of America American Standards Assoc., 05/25/60

62 * ASTM E308, Computing the Color of Objects by Using the CIE System, ASTM

63 NASA TM-82585 , William W. Vaughan, Natural Environment Criteria for the Space Station Program Definition Phase Atmos. Sciences Div/Systems, Dynamics Lab, NASA, 3-18-53

64 MIL-STD-1179B, Lamps, Reflectors and Associated Signalling Equipment for Military Vehicles, US Army Tank Automotive Command, DOD, 09/14/82

65 MSFC-STD-350A, Abbreviations for Use on Drawings NASA-MSFC, NASA, 06/26/67

66 SAE J185, Access Systems for Off-road Machines Off-road Machinery Technical Committee, SAE 6-8-85

67 SAE J925, Minimum Service Access Dimensions for Off-road Machines Const. & Ind. Machinery Tech. Committee ,SAE 10-25-84

68 SAE J833 USA, Human Physical Dimensions Const. & Ind. Machinery Tech. Committee, SAE 12-83

69 MH01-05175-414, Panel Controls (CM/LEM Control and Display Standardization), North American Aviation, 06/15/65

70 MH01-05176-414, Display Faces (CM/LM Control and Display Standardization), North American Aviation, 06/15/65

71 MH01-05178-414, Annunciator and Electromechanical Status Indicator North American Aviation, 06/15/65

72 MH01-05174-414, Nomenclature, Markings and Color North American Aviation, 08/26/65

73 MH01-01388-416, Interior Lighting Functional Performance Criteria North American Aviation, 07/30/65

74 MF0004-050, J. T. Horton Panel Design Criteria and Guidelines - Controls and Displays - Orbiter, Rockwell Intl. - Space Di, 10/15/76

75 ANSI S1.4-1971, Writing Group S1-W-45 Specification for Sound Level Meters Acoustical Society of America, ANSI, 04/27/71

76 ANSI/IEEE STD 260-1978, IEEE Standard Letter Symbols for Units of Measurement Int. Electrotech. Comm., IEEE, 12/29/78

77 ANSI Y10.20.1975, Mathematical Signs and Symbols for Use in Physical Sciences and Technology, ASME, ASME, 10/15/75

78 * NASA CR-1726, Marton, T., Rudek, F.P., Miller, R.A., Norman, D.G., Handbook of Human Eng. Design Data for Reduced Gravity Conditions, General Electric Co. NASA, MSFC

79 * NASA CR-3751, Shields, N.L. Analysis of Large Space Structures Assembly Essex Corp., NASA-MSFC, 12-83

80 NASA SP-5093, Athey, S. W. Acoustics Technology - A Survey Technology Utilization, Division Office of Tech Util-NASA

81 NASA SP-7012, Mechtly, E. A. The Intl. System of Units Physical Constants and Conversion Factors, Scientific and Technical Info. Office, NASA

82 NHB 1700.7, Safety Policy and Requirements for Payloads Using the STS, NASA

83 D6-49958, Farrell, R. J., Guidelines for CRT Workstations Boeing Commercial Airplane, 03/22/82

84 VOL.27, #2, APRIL 1985, Simpson, C.A., et.al., System Design for Speech Recognition and Generation Human Factors Society, Inc., Human Factors, 4-85

85 ANSI S1.6-1967, Preferred Frequencies and Band Numbers for Acoustical Measurements Acoustical Society of America, ANSI, 03/17/67

86 * NASA SP-483, Connors, M. M., Harrison, A. A., Akins, F. R., Living Aloft: Human Requirements for Extended Spaceflight, Ames Research Center, NASA 2-76

87 Personnel and CE Equipment Shock Tolerance - Final Report, U.S. Army Communications Command, Boeing Aerospace Co.

88 Harris, C. M. Crede, C. E., Shock and Vibration Handbook, McGraw-Hill Book Co.

89 * NASA-TM-85355, Shuttle EVA Description and Design Criteria (Superseded by JSC-10615, Ref. 100), NASA

90 * JSCM 8080, Manned Spacecraft Criteria and Standards, JSC NASA, 04/26/71

91 MIL-STD-250D, Aircrew Station Controls and Displays for Rotary Wing Aircraft, DOD, 08/28/74

92 * NASA-SP-3006, Parker, J.F., Wext, V.R. ,Bioastronautics Data Book, Biotechnology, Inc., Office of Nav Res/NASA

93 ANSI Y10.3-1968 Letter Symbols for Quantities used in Mechanics of Solids, ANSI, ASME, 10/29/68

94 ANSI/IEEE STD 289-1985, IEEE Std. Letter Symbols for Quantities used in Elec. Sci. and Engineering, IEEE Stds. Coord Committee 14, IEEE, 12/12/84

95 NAS 1282, Hook, Snap, Bolt, Natl. Aero Stds. Committee, AIAA, 06/30/66

96 ESSEX-H-82-04, Shields, N., Pruett, E., HF and Space Technology: Notes on Space Related Human Factors R&D, History, Facilities, etc., Essex, 08/26/82

97 MSFC-PROC-711A, Spacelab Display Design and Command Usage Guidelines, Essex Corp., NASA-MSFC, 1-79

98 ISO Stds. Handbook 4, Acoustics, Vibration and Shock, ISO

99 MCR-70-446, Rosener, A. A., et al, Architectural/Environmental Handbook for Extra-terrestrial Design, Martin Marietta Corp., 11-70

100 * JSC-10615, Shuttle EVA Description and Design Criteria, Crew Training & Procedures Div - NASA, NASA-JSC, 5-83

101 * ISO 2631-1978(E), Guide for the Evaluation of Human Exposure to Whole Body Vibration, ISO, 01/15/78

102 * Kirkpatrick, M., Malone, T., Shields, N., Earth Orbital Teleoperator Visual System Evaluation Program (Report 1), Essex Corp., NASA-MSFC, 3-73

103 H-84-04, Shields, N., Fagg, M., Analysis and Selection of a Remote Docking Simulation Visual Display System, Essex Corp., NASA-MSFC, 4-84

104 H-82-01/H-82-01.1, Shields, N., Piccione, F., Malone, T., et al, Human Operator Performance of Remotely Controlled Tasks, Essex Corp., NASA-MSFC, 3-82

105 Brye, R., Kirkpatrick, M., Malone, T., Shields, N., Earth Orbital Teloperator Manipulator System Evaluation Program (Report 3), Essex Corp., NASA-MSFC, 2-76

106 H-77-2, Brye, R., Frederick, P., Malone, T., Shields, N., Earth Orbital Teloperator Manipulator System Evaluation Program (Report 4), Essex Corp., NASA-MSFC, 01/28/77

107 * JSC 19617, Mitchell, J. P., Crew Interface Panel Space Station Habitability Requirements Document, NASA-JSC, 12-83

108 * NASA TM X-64825, MSFC Skylab Crew Systems Mission Evaluation, System Analysis and Integration Lab, NASA-MSFC, 8-74

109 NATICK/TR-77/024, Anthropometry of Women of the U.S. Army - 1977, Rep. 2 - Basic Univariate Statistic, Webb Associates, Inc., US Army Natick R&D CMD

110 AMRL-TR-70-5, Clauser, C., McConville, J., Tucker, P., et al, Anthropometry of Air Force Women, AMRL

111 * Woodson, Wesley E., Human Factors Design Handbook, McGraw-Hill, Inc., 5-81

112 SAE J898, Control Locations far Off-Road Work Machines Transactions: Society of Automotive Engineers, SAE, 7/82

113 Lessons Learned on the Skylab Program - Headquarters, HQ Skylab Program Office Eng. Direc., NASA-HQ, 11-74

114 * Lessons Learned on the Skylab Program - MSFC, MSFC Skylab Program Office, NASA-MSFC, 2-22-74

115 * JSC-09535, Skylab Experience Bulletin No. 1 - Translation Modes and Bump Protection, NASA-JSC 6-74

116 JSC-09537, Skylab Experience Bulletin No. 3 - Architectural, Evaluation of Sleeping Quarters NASA-JSC, 7-74

117 JSC-09538, Skylab Experience Bulletin No. 4 - Design, Characteristics of the Sleep Restraints NASA-JSC, 7-74

118 JSC-09539, Skylab Experience Bulletin No. 5 - Inflight Maintenance, NASA-JSC, 9-74

119 * JSC-09540, Skylab Experience Bulletin No. 6 - Space Garments for IVA Wear, NASA-JSC, 8-74

120 JSC-09541, Skylab Experience Bulletin No. 7 - IVA Personal Restraints, NASA-JSC, 10-74

121 JSC-09542, Skylab Experience Bulletin No. 8 - Cleaning Provisions Within the Waste Management Compartment, NASA-JSC, 10-74

122 JSC-09543, Skylab Experience Bulletin No. 9 - Foot Restraint Systems, NASA-JSC, 12-74

123 JSC-09544, Skylab Experience Bulletin No. 10 - Body Restraint Systems, NASA-JSC, 12-74

124 * JSC-09545, Skylab Experience Bulletin No. 11 - Personal Mobility Aids, NASA-JSC, 1-75

125 * JSC-09546, Skylab Experience Bulletin No. 12 - Temporary Equipment Restraints, NASA-JSC, 2-75

126 JSC-09547, Skylab Experience Bulletin No. 13 - Tools, Test Equipment, and Considerations for Inflight Maintenance, NASA-JSC, 11-74

127 JSC-09548, Skylab Experience Bulletin No. 14 - Personal Hygiene Equipment, NASA-JSC, 1-75

128 JSC-09549, Skylab Experience Bulletin No. 15 - Cable Management in Zero-G, NASA-JSC, 9-75

129 * JSC-09551, Skylab Experience Bulletin No. 17 - Neutral Body Posture in Zero G, NASA-JSC, 7-75

130 * JSC-09552, Skylab Experience Bulletin No. 18 - Evaluation of Skylab IVA Architecture, NASA-JSC, 12-75

131 * JSC-09553, Skylab Experience Bulletin No. 19 - Food System, NASA-JSC, 2-76

132 * JSC-09561, Skylab Experience Bulletin No. 27 - Personnel, and Equipment Restraints and Mobility Aids, NASA-JSC, 5-75

133 MSC-03909, Habitability Data Handbook - Vol. 1, Mobility and Restraint, NASA-MSFC, 7-31-71

134 * MSC-03909, Habitability Data Handbook - Vol. 2, Architecture and Environment NASA-MSFC, 7-31-71

135 MSC-03909, Habitability Data Handbook - Vol. 2, Architecture and Environment, Supplement 2, NASA-MSFC, 4-72

136 MSC-03909, Habitability Data Handbook - Vol. 2, Architecture and Environment, Supplement 2, NASA-MSFC, 5-73

137 * MSC-03909, Habitability Data Handbook - Vol. 3, Housekeeping, NASA-MSFC, 7-31-71

138 * MSC-03909, Habitability Data Handbook - Vol. 4, Food Management, NASA-MSFC, 7-31-71

139 * MSC-03909, Habitability Data Handbook - Vol. 5, Garments and Ancillary Equipment, NASA-MSFC, 7-31-71

140 MSC-03909, Habitability Data Handbook - Vol. 6, Personal Hygiene, NASA-MSFC, 7-31-71

141 70-6651, Habitability Guidelines and Criteria, Airesearch Mfg. Co., NASA-MSFC, 1-7-71

142 * NASA SP-3006, Webb, P. ,Bioastronautics Data Book, Webb Associates, NASA, 1964

143 * NASA SP-3006, Parker, J., West, V., Bioastronautics Data Book - Second Ed., Biotechnology, Inc., NASA, 1973

144 MDC H0843, Initial Spacelab VFT Report, Vol. V, Habitability McDonnell Douglas Corp. 9-84

145 JSC-20466, EVA Catalog - Tools and Equipment, NASA-JSC, 11-4-85

146 * D180-27863-2 II, System Analysis Study of Space Platform and Station Accommodations For Life Sciences Research Facilities, Boeing Aerospace Co., 10-85

147 Human Capabilities in Space, Life Sciences Div., NASA-HQ, 3-84

148 NASA Ref Pub 1045, Waligora, J.M. The Physiological Basis for Spacecraft, Environmental Limits, NASA-JSC, NASA, 1979

149 SR-ER-0003, Habitability and Human Engineering, ERNO, 3-81

150 * JSC-12770, Shuttle Flight Operations Manual, NASA-JSC, 8-16-85

151 Calvin, M., and Gazenko, O. Foundations of Space Biology and Medicine - Vol. I, NASA 1975

152 Calvin, M., and Gazenko, O. Foundations of Space Biology and Medicine - Vol. II, Book 1, NASA 1975

153 Calvin, M., and Gazenko, O., Foundations of Space Biology and Medicine - Vol. II, Book 2, NASA, 1975

154 Calvin, M., and Gazenko, O. ,Foundation of Space Biology and Medicine - Vol. III, NASA, 1975

155 * MSFC-STD-512, Standard Man/System Design Criteria for Manned Orbiting Payloads, NASA-MSFC, 8-12-74

156 * JSC-09096 Lessons Learned on the Skylab Program - JSC, NASA-JSC, 7-18-74

157 * Van Cott, H.P., and Kinkade, R.G., Human Engineering Guide to Equipment Design, US Government Printing Office, 1972

158 * Approaches to the Design of the Housekeeping System for the Space Station, LEMSCO, NASA-JSC, 3-18-85

159 * JSC-07387B, SC-S-0014, Crew Station Specifications - Inflight Stowage Management Data Requirements, NASA-JSC, 10-72

160 * JSC-07387B, SC-S-0011, Crew Station Specification - Loose Equipment and Stowage Management Requirement, NASA-JSC, 10-72

161 JSC-302XX, Space Station Program - Phase B Commonality Plan, Space Station Program Office, NASA-JSC 11-22-85

162 TM X-53957, Weidner, D. K. Space Environment Criteria Guidelines for Use in Space Vehicle Development, NASA-MSFC, 10-17-69

163 * Sinclair, W. K., Radiation Safety Standards: Space Hazards vs. Terrestrial Hazards, Advances in Space Research, Vol. 3, No. 8, 1983

164 * Sinclair, W. K., Radiation Risk Estimation and Its Application to Human Beings in Space, Advances in Space Research, Vol. 4, No. 10, 1984

165 Shoenberger, R. W., Research Related to the Expansion and Improvement of Human Vibration Exposure Criteria, Shock and Vibration Bulletin, 9-79

166 Bangs, W.F., Development of STS Payload Environmental Engineering Standards, Proc. Inst. of Env. Sci., NASA-GSFC, 1981

167 Ewing, D.E., A Space Radiation Monitoring System for Support of Manned Spaceflight, Intl. Astronautical Congress - Vol. 5, Kirtland AFB. 1966

168 Edman, T.R., Human Factors Guidelines for the Use of Synthetic Speech Devices, Proc. Human Factors Society, Human Factors Society, 1982

169 Courtney, A.J., and Ng, M.K., Hong Kong Female Hand Dimensions and Machine Grinding, Ergonomics, Vol. 2,7, No. 2, 1984

170 Ramsey, H.R., Human Factors and Artificial Gravity: A Review Human Factors, 13(6), Human Factors Society, 1971

171 Haines, R.F., A Review of Peripheral Vision Capabilities for Display Layout Designers, Proc. of S.I.D., Vol. 16/4, 1975

172 Haines, R.F., Color Design for Habitability, Northwest Architect, 4-74

173 Haines, R.F., Bartz, A.E., and Zahn, J.R., An Investigation of Visual Performance Capabilities in a Space Station-Like Environment, Proc. Aerospace Medical Assoc., 4-28-71

174 Haines, R.F., and Gillaland, K., Response Time in the Full Visual Field, Journal of Applied Psych, Vol. 58, No. 3, 12-73

175 Haines, R. F., Visual R esponse Time to Colored Stimuli in Peripheral Retina:Evidence for Binocular Summation, Am. J. Optometry and Physio. Op., Vol. 54, No. 6, 6-77

176 Haines, R.F., and Allen, W.H., Irradiation and Manual Navigation, Navigation, 1969

177 Haines, R.F., Detection Time to a Point Source of Light Appearing in a Star Field Background With and Without a Glare Source Present, J. of Hum. Fac. Soc., 10-68

178 * NASA TM 88233 (1986), Haines, R.F. Space Station Proximity Operations Windows: Human Factors Design Guidelines, NASA-ARC, 1986

179 * CONF-7809164, Schimmerling, W., and Curtis, S.B., Workshop on the Radiation Environment of the Satellite Power System (SPS), Satellite Power System Project, DOE, 12-79

180 * American National Standard for Human Factors Engineering of Visual Display Terminal Workstations (DRAFT), Human Factors Society, 4-20-85

181 Muckler, F.A., Human Factors Review: 1984, Human Factors Society, 1984

182 * Boff, E.R., and Lincoln, J.E., Engineering Data Compendium: Human Perception and Performance, USAF-WPAFB, DRAFT

183 CONF-830609-64, Clarke, M., Hamel, W., and Draper, J. Human Factors in Remote Control Engineering Development Activities, Union Carbide Co., American Nuclear Society, 6-83

184 Shea, M.L. Proceedings of the Submarine Atmosphere Contaminant Workshop, Naval Submarine Medical Research Lab., USN, 9-83

185 C1, HEL, Hendricks, D.E., et al, Human Engineering Guidelines for Management Information Systems (See Ref. 279 for final revised document issued as DOD-HDBK-761), US Army Human Engineering Lab., US Army 6-1-83

186 NASA CR-172590, White, R.W., and Parks, D.L., Study to Determine Potential Flight Applications and Human Factors Design Guidelines for Voice Recognition and Synthesis Systems, Boeing Commercial Airplane Co., NASA-LaRC, 7-85

187 MS254V1003, Space Shuttle Orbiter Waste Collection System Conceptual Study, Fairchild Corp., NASA-JSC, 1-18-85

188 Radiological Health Handbook, Bureau of Radiological He, 1970

189 * Grahn, D., HZE-Particle Effects in Manned Spaceflight, National Academy of Science, 1973

190 NSSDC/WDC-A-R&S 76-06, Sawyer, D.M., and Vette, J.I.. AP-8 Trapped Proton Environment for Solar Maximum and Solar Minimum, NSSDC, 12-76

191 NSSDC 72-06, Singley, G.W., and Vette, J.I., The AE-4 Model of the Outer Radiation Zone Electron Environment, NSSDC, 8-72

192 NSSDC/WDC-A-R&S 76-04, Teague, M.J., Chan, E.W., and Vette, J.I., AE-6: A Model Environment of Trapped Electrons for Solar Maximum, NSSDC, 5-76

193 * JSC-07387B, SC-D-0007B, Langdoc, W.A., Crew Station Specifications - Displays, NASA-JSC, 1-82

194 * JSC-07387B, SC-C-0005B, Langdoc, W.A. Crew Station Specifications - Controls, NASA-JSC, 1-82

195 * JSC-07387B, SC-M-0003, Wheelwright, C. D., Crew Station Specifications - Markings, NASA-JSC, 8-81

196 JSC-07387B, SC-A-0004B, Langdoc, W. A., Crew Station Specifications - Abbreviations, NASA-JSC, 8-81

197 JSC-07387B, SC-D-0001, Nussman, D. A., Crew Station Specifications - Metal Foil Decals, NASA-JSC, 02/16/71

198 * JSC-07387B, SC-E-0010, Wheelwright, C. D., Crew Station Specifications - Environmental Criteria, NASA-JSC, 9-81

199 * JSC-07387B, SC-L-0002B, Wheelwright, C. D., Crew Station Specifications - Lighting, NASA-JSC, 9-81

200 * JSC-07387B, SC-E-0006, Smith, J. R., Crew Station Specifications - EVA/IVA Support Equipment, NASA-JSC, 12/01/72

201 * JSC-07387B, SC-C-0009, Franklin, G. C. Crew Station Specifications - Operation Location Coding Form Crew Interfaces, NASA-JSC, 4-10-72

202 JSC-07387B, SC-C-0009, S1, Hix, M. W., Crew Station Specifications - Exterior Location Coding, NASA-JSC, 01/03/77

203 NASA CR-3857, APP. C, Peerly, R.L., Rockoff, L. A., and Raasch, R. F., Space Station Crew Safety Alternatives Study - Final Report, Appendix C, Rockwell International, NASA - LaRC, 6-85

204 * NASA CR-3855, APP. D, Peercy, R. L., Raasch, R. F., and Rockoff, L. A., Space Station Crew Safety Alternatives Study - Final Report, Appendix D, Rockwell International, NASA - LaRC, 6-85

205 NASA CR-3855, App. E, Peerly, R. L., Rockoff, L. A., and Raasch, R. F., Space Station Crew Safety Alternatives, Study - Final Report, Appendix E, Rockwell International, NASA - LaRC, 6-85

206 * NASA CR-3855, Vol. II, Raasch, R. F., Peercy, R. L., and Rockoff, L. A., Space Station Crew Safety Alternatives Study, Final Report Vol. II - Threat Development, Rockwell International, NASA - LaRC, 6-85

207 * ESD-TR-83-122, Smith, S. L., and Aucella, A. F., Design Guidelines for the User Interface to Computer-Based Information Systems, The MITRE Corp., AFSC, 3-83

208 * NASA SP-447, Nicogossian, A.E., and Parker, J.F., Space Physiology and Medicine, NASA

209 * NASA TN D-6600, Burrell, M. O., and Wright, J. J., The Estimation of Galactic Cosmic Ray, Penetration and Dose Rates, NASA-MSFC, NASA, 3-73

210 * Mewaldt, R. A., The Elemental and Isotopic Composition of Galactic Cosmic Ray Nuclei (Paper 2R1868), Rev. of Geophysics and Space Physics, AGU, 3-83

211 McGuire, R. E., et al, Solar Flare Particle Fluences During Solar Cycles 19, 20, and 21, Proc. of 18th Intl. Cosmic Ray Conference, NASA - GSFC, 1983

212 STP-84-4, Data Announcement: World Data Center-A, Archive of Zurich and International Sunspot Numbers, National Geophysics Data Center, NOAA, 3-85

213 * NASA CR-174696, Silverman, S.W., Willenberg, H.J. & Robertson, C., Applicability of 100 KWe Class of Space Reactor Power Systems to NASA Manned Space Station Missions, Boeing Aerospace Company, NASA - LeRC, 8-84

214 * 94SSV154970, Hill, R. E. Space Shuttle Orbiter Crew Compartment Acoustic Noise - Environments and Control Considerations, Rockwell International

215 Alberti, P. W., Personal Hearing Protection in Industry, Raven Press, New York, 1982

216 OSHA Field Operations Manual, OSHA, Dept. of Commerce

217 ANSI S1.2-1962 (R1976), American National Standard Method for the Physical Measurement of Sound, ANSI, Acou. Soc. of America, 8-20-62

218 * BS 6472: 1984, British Standard Guide: Evaluation of Human Exposure to Vibration in Building Mechanical Engineering Standards Comm., British Stands. Inst., 1984

219 * ANSI S1.10-1966 (R1976), American National Standard Method for the Calibration of Microphones, ANSI, Acoustical Society of America, 1966

220 ASA S1.11-1966, American Standard Specification for Octave, Half-Octave, and Third-Octave Band Filter Sets, American Standards Association, Acous. Soc. of America

221 MIL-S-3151, Sound-Level Measuring and Analyzing Equipment

222 ANSI S3.5-1969 (R1978), American National Standard Methods for the Calculation of the Articulation Index, ANSI, Acous. Soc. of America, 1978

223 * NASA RP 1115, Krytor, K.D., Physiological, Psychological, and Social Effects of Noise, NASA - LaRC, 7-84

224 * Stevens, D.G., Vibroacoustic Habitability of Space Stations, NASA - LaRC, 8-30-83

225 JSC 32003, Space Station Viewport Study - First Edition, Space and Life Sciences Directorate, NASA - JSC, 12-85

226 NASA CR-160861, Roebuck, J. A., Shuttle Considerations for the Design of Large Space Structures, Rockwell International Corp., NASA-JSC, 11-80

227 LEMSCO 21493, The Historical Development and Human Factors Evaluative Design Criteria of Intravehicular Crew Restraints and Positioning Devices, LEMSCO, NASA - JSC, 3-85

228 * Medical Requirements of an Inflight Medical System for Space Station, NASA - JSC

229 * Space Station Health Maintenance Facility Status Update, Medical Operations Branch, NASA - JSC, 2-86

230 * HMF STATUS, Space Station Health Maintenance Subsystems, NASA - JSC, 2-86

231 * HMF (Health Maintenance Facility) Requirements Documents, NASA - JSC, 11-85

232 * Microbiology Requirements and Specifications for Space Station, Biomedical Laboratories Branch, NASA - JSC, 2-14-86

233 * Particulates, Biomedical Laboratories Branch, NASA - JSC

234 Microbiology, Biomedical Laboratories Branch, NASA - JSC

235 * JSC 30203, Space Station Program Office On-Orbit Maintenance Operations Plan, McDonnell Douglas Astronautics Corp., NASA - JSC, 2-21-86

236 LMSC/D927646, Development of Reliability/Maintainability Guidelines, Final Report, Lockheed Missiles and Space Company, NASA - JSC 11-18-83

237 AFSC-PAM 800-39, Built-in-Test Design Guide, Departments of the Army, N, 3-19-81

238 * Lusk, J., Maintainability Design Requirements, MSFC (Draft), NASA - MSFC, 11-85

239 EPRI NP-4350s, Pack, R.W., et al, Human Engineering Design Guidelines for Maintainability, General Physics Corp., Elec. Pwr. Res. Inst., 12-31-85

240 ISBNO-03-070741-2, Stine, H.G., Handbook for Space Colonists Holt, Rinehart, and Winst 1985

241 * D180-28182-1, Bluth, B.J. Soviet Space Stations as Analogs, National Behavior Systems, Boeing Aerospace Company 10-83

242 Health Maintenance Facility Data Requirement, Phase 2 Data Book (Draft), Lockheed Missiles and Space, 1-86

243 SSCBD/SSCN BG030038, Establish Servicing Facility Requirements

244 JSC 30000, Sec. 5, App. D, Space Station Program Definition and Requirements, Section 5: Space Station Mission Integration Requirements, NASA - JSC, 12-9-85

245 Toxicology, Biomedical Laboratories Branch, NASA - JSC

246 JSC, 07700, Rev. D, Space Shuttle System Payload Accommodations, Vol. XIV, NASA-JSC

247 NASA CR-2160, Brown, N. E.. Dashner, T. R., and Hayes B. C. Extravehicular Activities Guidelines and Design Criteria URS/Matrix Company NASA-MSFC 1-73

248 H-76-6, Pruett, E. C, Dodson, D. W., and Kirkpatrick, M., Extravehicular Activity Design Guidelines and Criteria, Essex Corporation, Essex Corporation, 5-76

249 * JSC-18702, Flight Data File, Spacelab, In-Flight Maintenance (IFM) Checklist, Mission Operations Directorate, NASA-JSC, 10-15-85

250 * NASA Judgement Call, NASA - JSC

251 NASA CR-167614, Nash, J.D., Wilde, R.C., and King, K.R., Study of EVA Operations Associated with Satellite Services, Hamilton Standard, NASA-JSC, 4-82

252 JSC 18201, Rouen, M.N., and King, K.R., The Shuttle Extravehicular Mobility Unit, Proc. of the Satellite Services Workshop, NASA-JSC and Hamilton Standard, NASA-JSC, 6-82

253 * JSC-19212, Satellite Services Handbook: Interface Guidelines, Lockheed Missiles and Space Company, NASA-JSC, 12-23-83

254 Santy, P., The Journey Out and In: Psychiatry and Space Exploration, Am. J. Psychiatry, 140, 5-83

255 NASA TM X-58067, Kanas, N.A., and Fedderson, W.E., Behavioral Psychiatric and Sociological Problems of Long Duration Space Missions, NASA-JSC, 10-71

256 * Psychological, Sociological, and Habitability Issues of Long Duration Space Missions, Dept. of Behav. Science & Leadership, USAF Acad., NASA-JSC, 1-85

257 * Parker, J.F., Christensen, D., Sheehan, B.M., U.S. Naval Flight Surgeon's Manual (Second Edition - 1970), Biotechnology, Inc., Office of Naval Research, 1978

258 Code of Federal Regulations, Aeronautics and Space, Vol. 14, Parts 1 to 59, Office of the Fed. Reg., 1-1-85

259 * Space Transportation System User Handbook, NASA, 5-82

260 * D180-28806-3, Advanced EVA System Design Requirements Study, Final Report, Vol. III, Boeing Aerospace Company, 3-3-86

261 * D180-28402-1, Jones, H.V,. Space Station Habitability Design Recommendations, Vol. I & Vol. II, Boeing Aerospace Company,11-15-84

262 * JSC-18201, Rouen, M.N., and King, K.R., Satellite Services Workshop, NASA-JSC and Hamilton Standard, NASA-JSC, 6-82

263 * NASA CR-167614, Nash, J.D., Wilde, R.C., and King, K.R., Study of EVA Operations Associated With Satellite Services, Hamilton Standard, NASA-JSC, 4-82

264 * SSCN JJ020011, Covington, C. EVA/Airlock Medical Requirements Section of JSC 31000, JSC Systems Engineering Office, NASA-JSC 10-15-85

265 * Slade, H.G, and Newman, R.L., Shuttle EMU Capabilities for Satellite Servicing, Hamilton Standard and ILC, 8-85

266 * H-76-5 Malone, J.B. et al, External Operations, Maintenance and Repair (OMR) Mode Selection Criteria, Essex Corporation, NASA-MSFC, 5-10-76

267 The NOAA Diving Manual - Diving for Science and Technology, National Oceanic and Atmospheric Admin., U.S. Dept of Commerce

268 * Herbert R. Hazard, U. S. Navy Diving - Gas Manual, Battelle Memorial Institute, National Technical Inform

269 ASME Ocean Tech Div/USN/Marine Tech Soc/Battelle, The Working Diver - 1974, Marine Technology Society, Marine Technology Society

270 Buoni, et.al., Space Station Contamination in Pressurized Environments: Issues and Options, Battelle Columbus Laboratories, NASA/KSC

271 Churchill, E., Kikta, P., Churchill, T., Intercorrelations of Anthropometric Measurements: A source Book for USA Data, Webb Associates, Inc., A/F Aerospace Medical Res, 5-78

272 * Martin, A. D., Drinkwater, D. T., Clarys, J. P., Human Body Surface Area: Validation of Formulae Based on a Cadaver Study, Human Biology, Wayne State University Pr, 9-84

273 * FAA-AM-83-16 Young, J. W., Anthropometric and Mass Distribution Characteristics of the Adult Female, FAA Civil Aeromedical Institute, FAA, 9-83

274 * AMRL-TR-74-102, Churchill, E. Sampling and Data Gathering Strategies for Future USAF Anthropometry, Webb Associates, Inc., A/F Aerospace Medical Res, 2-76

275 * Roebuck, J. A., Kroemer, K. H. E., Thomson, W. G., Engineering Anthropometry Methods, John Wiley and Sons, Inc., 1975

276 * AF AMRL-TR-180-119, McConville, John, Anthropometric Relationships of Body and Body Segments Moments of Inertia, Anthropology Research Project, Inc., A/F Aerospace Medical Res, 12-80

277 * JSC 30213, Space Station Program Design Criteria and Practices, Space Station Program Office, NASA-JSC, 4-15-86

278 * JSC 30000 Sec. 3 App. C, Space Station Program Definition and Requirements Section 3: Space Station, Systems Requirements (Rev B), Space Station Program Office, NASA-JSC, 4-15-86

279 * DOD-HDBK-761, Human Engineering Guidelines for Management Information Systems (Metric), DOD, 6-28-85

280 * DeHart, Roy, M.D., Fundamentals of Aerospace Medicine, Lea and Febiger

281 * TB Med 501, Hearing Conservation, Hdqtrs. Department of the Army, U.S. Government Printing, 3-15-80

282 ASHRAE Handbook 1984, Systems, ASHRAE, 1984

283 * Vol. 2, #3; Vol. 2, #4; Vol. 3, #1, Backteman, O., Kohler, J. Sjoberg, L., Infrasound - Tutorial and Review, Journal of Low Frequency Noise and Vibration, 1983

284 * Bennet, G.L., Lombardo, J.J. and Rock, B.J., Development and Use of Nuclear Power Sources for Space Applications, The Journal of the Astronautical Sciences, Vol. 29, No. 4, pp 321-342, Oct.-Dec., 1981.

285 * Fry, R.J.M., Approaches to Radiation Guidelines for Space Travel, Advances in Space Research, Vol. 4, No. 10, Committee on Space Research (COSPAR), Pergamon Press, 1984

286 * Hall, Eric, Radiobiology for the Radiologist, Harper and Row, 1978

287 * NASA TM 86265, Townsend, L.W. Galactic Heavy-Ion Shielding Using Electrostatic Fields, NASA - Langley Research Center, 1984

288 * Bernet, R. E. and Stekly, Z. J., Magnetic Radiation Shielding Using Superconducting Coils in NASA SP-71 Second, Symposium on Protection Against Radiation in Space, 1965

289 * D180-28806-3, Thompson, J.J., Space Station Advanced EVA Systems Design Requirements, Boeing Aerospace Company 1986

290 * FED-STD-595, Color

291

292 * Broch, J.T., Mechanical Vibration and Shock Measurements, Bruel & Kjaer Instruments, Inc., Bruel & Kjaer Instruments, 10/80

293 Guignard, John C., Patty's Industrial Hygiene and Toxicology John Wiley & Sons

294 * Rasmussen, G., Human Body Vibration Exposure and its Measurement, Technical Review, Bruel & Kjaer Instruments, Inc., 1982

295 * Peterson, A. P., Handbook of Noise Measurement - 9th. Edition, General Radio, Inc., 1980

296 * S3-W-39, Godlman, D. E. and Von Gierke, H. E., The Effects of Shock and Vibration on Man, Naval Medical Research Institute, U.S.A. Standards Institute, 1-8-60

297 * Graf, R.F., Electronic Databook: A Guide for Designers, Second Edition, Van Nostrand Reinhold, 1974

298 * ANSI C95.1-1982, American National Standard Safety Levels With Respect to Human Exposure to Radio Frequency, IEEE, 1982

299 * Wilkening, G.M., Commentary on the Non-ionizing Radiations, Proc. SPIE, Vol. 229, Soc. of Photo-Optical Inst

300 * Review of Concepts, Quantities, Units and Terminology for Non-Ionizing Radiation Protection, Health Physics 49, Intl. Rad. Protec. Assoc. 1985

301 * Preliminary Report and Forecasting of Solar Geophysical Data - Descriptive Text, Space Environmental Services Center, US Dept. of Commerce, 6-86

302 * Interim Guidelines on Limits of Exposure to Radiofrequency Electromagnetic Fields in the Frequency Range From 100 kHz to 300 kHz Health Physics, Vol. 46, IRPA, 4-84

303 * Guidelines on Limits of Exposure to Laser Radiation of Wavelengths Between 180 nm and 1 mm Health Physics, Vol. 49, IRPA, 8-85

304 * Guidelines on Limits of Exposure to Ultraviolet Radiation of Wavelengths Between 180 - 400 nm (Incoherent Optical Radiation), Health Physics, Vol. 49, IRPA, 8-85

305 * ANSI Z.136.1, Safe Use of Lasers, ANSI, 1980

306 * Rationale for the Threshold Limit Values of Chemical Substances and Physical Agents in the Work Environment, Amer. Conf. of Govt Indus, 1982

307 * AMRL-TR-75-32 Laubach, Lloyd L. Muscular Strength of Women and Men: A Comparative Study Aerospace Medical Research Laboratory Wright-Patterson AFB Ohio 1976

308 * ST-E-1321, Japanese Female Body Size Natl Space Development Agency of Japan 06-05-86

309 * Edited by Altman, P.L. and Fisher, K.D. Research Opportunities in Nutrition and Metabolism in Space, Fed. of Amer. Societies for Exp. Biology

310 * AMRL-TR-77-50, Kenneth Kennedy Reach Capability of Men & Women: A Three Dimensional Analysis, Aerospace Medical Research Laboratory, 7-78

311 * Trabanino, R. Space Station Galley Design Proceedings, 16th ICES Conference Society of Automotive Eng, 8-86

312 * Winkler, E.H., Shuttle Waste Management System Design Improvements and Flight Evaluation Proceedings, 16th ICES Conference Society of Automotive Eng, 8-86

313 * Thornton, W.E., Improved Waste Collection System for Space Flight Proceedings, 16th ICES Conference Society of Automotive Eng, 8-86

314 Orbiter Location Coding Control Drawing Number, VC70-660010, Rockwell International Corporation

315 * NAG2-346, Wise, J. A. ,Quantitative Modeling of Human Spatial Habitability NASA - Ames Research Cent, 12-85

316 * NAS2-11690, Stuster, J.W., Space Station Habitability Recommendations Based on a Systematic Comparative Analysis of Analogous Conditions Anacapa Sciences, Inc., NASA - Ames Research Cent, 12-84

317 * D180-28182-1, Soviet Space Stations as Analogs, Boeing Aerospace Co., 10-83

319 * MDC H2068 ,Tullis T.S., and Bied, B.R., Space Station Functional Relationships Analysis - Final Technical Report, McDonnell Douglas Astrona 2-86

320 * GIAG-3, Technical Panel Instructions, 8-23-86

321 * SS-SRD-600, REV. RUR-1.A, Space Station Environmental Control and Life Support (ECLS), Systems Requirements Document, NASA-MSFC

322 * Life Systems, Cleveland, Ohio Graph - CO2 Partial Pressure Increase Without CO2 Removal Life Systems, Cleveland, Ohio Life Systems, Cleveland, 1983

323 * 9-BF-10-4-01P, Space Station Definition and Preliminary Design Request for Proposal, NASA-JSC, NASA, 9-15-84

324 * Natural and Induced Environments Panel Meeting Int. Environ. Working Group (JSC), NASA - JSC ,2-19-86

325 * DWG 4380001, Rev A, Glazing - Window, Photographic, SAL Actron Industries, Inc., NASA-JSC 7-12-71

326 * Cox, John, Space Station Program Description Document, Book No. 6, Appendix B, System Operations Sp. Sta. Operations Working Group, NASA, 8-83

327 * Thompson, A. B., The Physiological Stresses of Vibration, Noise Acceleration and Weightlessness on Space Crews - Tolerance Criteria Vought Astronautics/LTV, Inc., Vought Astronautics/LTV, 1962

328 * Mc Cormack, P. D., Radiation Pose Prediction for Space Station Proceedings of 16th ICES, 7-86

329 * ICRP Publication 26, Recommendations of the Intl. Commission on Radiological Protection Annals of the ICRP ICRP, Pergamon Press, 1-77

330 * Silberg, R., et. al., LET - Distributions and Doses of HZE Radiation Components at Near-Earth Orbits Advances in Space Research, Vol. 4, #10 Committee on Space Research, Pergamon Press, 1984

331 ASHRAE, Transactions Fanger, P. O., Calculation of Thermal Comfort: Introduction of a Basic Comfort Equation ASHRAE Transactions Lab of Htg. & Vent. Tech U of Denmark, ASHRAE, 1967

332 * Thompson A. B. A Time-Sharing Computer Program for Defining Human Thermal Comfort Conditions in any Atmosphere, Apollo & Ground Systems, G.E., ASME 1972 Env. Control/Li, 8-15-72

333 * IAA 8220, Novak, L., Skin Temperature and Thermal Comfort in Weightlessness, AIAA Lab of Appl. Physiological Sci, Polish AIAA, 1982

334 * IAA 8011, Baranski, S, et. al., Investigation of the Cooling Properties of the Spacecraft Atmosphere Postepy Astronautyki Woiskowy Instytut Medycyny Lotniczet, WIML, 1979

335 * Woodson, W., Conover, D. W., Human Engineering Guide for Equipment Design, 2nd. Edition, Univ. of Calif. Press, 1964

336 * Boff, K.R., et . al. (Editors), Handbook of Perception and Human Performance, Wiley-Interscience, 1986

337 * Graham (Editor), Vision and Visual Perception, John Wiley and Sons, 1966

338 * Hecht, Haig, and Chase The Influence of Light-Adaptation on Subsequent Dark Adaptation J. Gen. Physiol. 1937

339 * 72-ENAv-13 Behrend, A.F., Swider, J.E. Development of a Waste Collection System for the Space Shuttle ASME 6-1-73

340 Boyce, P.R. Human Factors in Lighting MacMillan Publishing Co., 1981

341 * Doolittle, T.L., Spurlin, O. Trends in Ergonomics / Human Factors III Elsevier Science Publisher

342 Underwood, K. Advanced EVA Systems Design Requirements Study ILC Dover, Inc. 8-25-85

343 * Johnston, R.S., Dietlein, L.F. Biomedical Results from Skylab NASA - JSC US Government Printing Office 1977

344 * Kira, A. The Bathroom Viking Press 1976

345 * JSC 30000 (Draft) On-Orbit Maintenance Operations Requirements Document Space Station Program Office NASA - JSC 8-22-86

346 * MIL-STD-1472C, Not. 3 (pro) Military Standard, Human Engineering Criteria for Military Systems, Equipment, and Facilities (Proposed Notice 3) Project HFAC-0030) US ARMY MISSILE COMMAND 8-28-86

347 BuAer Report AE-61-4 Fundamentals of Design of Piloted Aircraft Flight Control Systems, Vol. III, The Human Pilot Bureau of Aeronautics 8-54

348 JSC-17727, CSD-SS-059 Lin, C.H. Space Station Environmental Control and Life Support System, Preliminary Conceptual Design Crew Systems Div. NASA - JSC 9-82

349 * Environmental Health Monitoring Facility (proposed new subsection provided at MSIS GIAG-4) Biomed Lab Branch, Med Sciences Div. NASA - JSC 10-27-86

350 * JSC 16536, Rev. C Orbiter Mid-deck Payload Provisions Handbook NASA-JSC

351 * GIAG-4 Technical Panel Instructions 10-30-86

352 NASA CR-4010 Nixon, D. Space Station Group Activities Habitability Module Study Inst. for Future Studies NASA - ARC 6-86

353 * Dixon, G. A., Adams, J. D., and Harvey, W. T., Decompression Sickness and Intravenous Bubble Formation Using a 7.8 psi Simulated Pressure Suit Environment, Aviation Space Environmental Medicine 1986

354 * NASA TM 58263 Waligora, J. M., and Horrigan, D. J., Detection of Incipient Altitude Decompression Sickness in Flight - Research and Technology Annual Report, NASA-JSC, 1984

355 * Dixon, G. A., and Krutz, R. W., Female Susceptibility to Decompression Sickness and Bubble Formation Using a Simulated 7.8 psia Suit Environment, Aviation Space Environmental Medicine, 1986

356 * Dixon, G. A, et al, 8.3 psi Decompression Sickness Risk Evaluation and Evaluation of 9.5 psia as a Suit Pressure for Prolonged EVA, NASA-JSC, 1986

357 * Krutz, R.W., Dixon, G.A., and Harvey, W.T. Minimum Pressure for a Zero-Prebreathe Pressure Suit, SAE, 1985

358 NASA TM 58259, Waligora, J. M., et .al., Verification of an Altitude Decompression Sickness Preventing Protocol for Shuttle Operations Utilizing a 10.2 psi Pressure Stage, NASA-JSC, 1984

359 * Allen, T. H., Mario, D. A., and Bancroft, R. W., Body Fats Denitrogenation and Decompression Sickness in Man Exercising After Abrupt Exposure to Altitude, Aerospace Medicine, 1971

360 * USNRC Reg. Gd. 8.8, Information Relevant to Maintaining Occupational Radiation Exposures as Low as, Reasonably Achievable (ALARA) (Rev. 3), U. S. Nuc. Reg. Commission, 1978

361 * Normane, D. Production of Activation Products in Spacecraft Components by Protons in Low Earth Orbit Trans. Am. Nucl. Soc. 11-86

362 * Benton, E. V., Summary of Current Radiation Dosimetry Results on Manned Spacecraft, Adv. in Space Research, 1984

363 Dorland Illustrated Medical Dictionary, W. B. Saunders Co., 1974

364 NASA TMX 2440, Spalding, J. F., et .al., Effects of Continuous Gamma-ray Exposure on Performance of Learned Tasks and Effects of Subsequent Fractionated Exposures, NASA, 1972

365 * SP-2-86L-064, Thornton, W, and Jackson, J., Anthropometric Study of Astronaut Candidates, 1979 to 1980, (Unpublished Data), NASA-JSC

366 8 JSC 31013, Medical Requirements of an Inflight Medical System for Space Station, NASA-JSC, 7-14-86

367 * Curtis, S., Atwell, W., Beever, R., and Hardy, A., Radiation Environments and Absorbed Dose Estimation on Manned Space Missions 26th Common Sp. Research, 7-86

368 * Matesky, I., Encyclopedia of Occupational Health and Safety, 3rd. Ed. Intl. Labor Office, 1983

369 * Mikolajczyle, H., Encyclopedia of Occupational Health and Safety, 3rd. Ed. Intl. Labor Office, 1983

370 * (FIR) AML-005, Woolford, B. Dressing Room Anthropometric Measurement Laboratory, NASA - JSC

371 * JSC 32003, Bell, L. et. al., Space Station Viewport Study Bell, and Trotti, Inc.

372 * Haines, R. F., Space Station Proximity Operations and Window Design, NASA - Ames, 3-24-86

373*CSD-A-518, Lem, J. D. and Booher, C. R., Study of the Apollo Space Suite Electrical Fire Hazard Crew Systems Division, NASA - JSC, 1-8-86

374 * MSIS Advisory Group #1 Technical Panel Instructions, 1/14/88

375 * Anatomy: A Regional Study of Human Structure, 4th ed., W. B. Saunders Co.

376 * Atlas of Topographical and Applied Human Anatomy; Urban & Schwarzenherg

377 * Wise, J. A. and Rosenberg, Erika, Interior Design and Performance Stress in Three types of Mental Tasks Environment and Behavior

378 * ANSI ES1, American National Standard for Safe Current Limits for Electromedical Apparatus, ANSI, 7/9/85

379 * Data Generated as a result of MSIS Advisory Group #1 Direction, 6/30/81

380 * NASA Life Sciences Data Book, Webb and Associates, Yellowsprings, Ohio 6/62

381 * Spacelab Payload Accommodation Handbook, T. Lee and B. Pfeiffer NASA - Marshal Space Flight Center, 7/79

382 * ANSI C95.1-1982, American National Standard Safety Levels with Respect to Human Exposure to Radio Frequency Electromagnetic Fields, 300 KHz to 100 KHz

383 * ANSI z136.1-1986, American National Standard for the Safe Use of Lasers, 5/23/86

384 * NSTS - 18798, Rev. A Interpretations of NSTS Payload Safety Requirements, NASA - JSC, 4/89

385 * Threshold Limit Values and Biological Exposure Indices for 1987-1988, American Conference of Governmental Industrial Hygienists

386 * JSC 3000 Vol. IV NC, Curves Handbook of Noise, Figure 4-6, pp. 55, Measurements, Arnold P.C. Peterson, GEN RAD Inc. , Concord, MA 1980

387 * SSP 30000 Sec. 3, Space Station Program Definition and Requirements Section 3: Space Station Systems Requirements (Rev. G), Space Station Program Office, NASA - Reston, 10/31/88

388 * Data Generated as a Result of The Space Station Freedom Man-Systems Working Group Review of Vol. IV of the MSIS 1989

389*NASA Contractor Report 187077, An Assessment of the Space Station Freedom's Leakage Current Requirement., *March 1991*

390*Roth, E.M., NASA-CR-1205, Compendium of Human Responses to the Aerospace Environment: Vol. I, Section 5, Figure 5-3. Lovelace Foundation for Med Ed & Research, NASA, November 1968

391*Dalziel, Charles F., "The Threshold of Perceptio,,,,,n Currents," AIEE Transactions, 73: 990 996, August 1954

392*MIL-STD-454M, Standard General Requirements for Electronic Equipment, December 15, 1989

393*JSCM 8080, JSC Design and Procedural Standards Manual

394*UL 544 Standard for Safety, Standard for Medical and Dental Equipment, Underwriters Laboratories, Inc., Northbrook IL, February 3, 1988

395*AFSC DH 1-6, Section 3H, Electrical/Electronic Systems, DN-3H1 "Safety Design Requirements," December 1, 1982

396*IEC 479-1, Effects of Current Passing Through The Body, 1984

397*Conversation between Calspan/M. Barry Greenberg, PE, and UL shock specialist Mr. Walter Skuggevig, UL: Melville, NY, October 1990

398*Dalziel, Charles F. , "Electric Shock Hazard," IEEE Spectrum, 41-50 February 1972

399*NFPA 99, Standard for Health Care Facilities, National Fire Protection Association, Inc., Quincy MA, January 12, 1990

400*NFPA 70 National Electric Code, Article 517 "Health Care Facilities," Paragraph 517-11 "General Installation/Construction Criteria," National Fire Protection Association, Inc., Quincy, MA, January 12, 1990

401*NFPA 70 National Electric Code, Article 517 "Health Care Facilities," Paragraph 517-15 "Maximum Potential Difference," National Fire Protection Association, Inc., Quincy, MA, January 12, 1990

402*DOD-E-8983C, Electronic Equipment, Aerospace, Extended Space Enviornment General Specification for, General Design Requirements Paragraph 3.3.16. December 29, 1977

403*Contract CPSC-C-79-1034, Development of Test Equipment and Methods for Measuring Potentially Lethal and Otherwise Damaging Current Levels, October 1982. Prepared for US Consumer Product Safety Commission, Division of Electrical and Electronic Engineering, Washington, DC, by Underwriters Labortories, Inc., Melville, NY

404*Sensitivity analyses by Calspan/M. Barry Greenberg, PE, of data presented to U.S. Consumer Product Safety Commission in Contract, CPSC-C-79-1034

405*NASA/Human Resource Policies and Procedures Committee (HRPPC), "Redbook" for crewmembers unable to readily remove bioinstrumentation electrodes

406*JSC - 32283 - Nutritional Requirements for Extended Duration Orbiter Missions (30-90 d) and Space Station Freedom

407*Snyder, R. G., Physiological effects of impact: Man and other mammals., In P.L. Altman & D.S. Dittmer (Eds.), Environmental biology. AMRL-TR-66-194, Aerospace Medical Research Laboratories, Wright-Patterson AFB, Ohio, 1966(b)

408*Synder, R. G., Human tolerances to extreme impacts in free fall, Aerospace Medicine, 1963, 34(8), 695-709

409*Snyder, R. G., & Snow, C. C., Fatal injuries resulting from extreme water impact, Aerospace Medicine, 1967, 38(8), 779-783.

410*IEEE C95.1-1991- "IEEE Standard for Safety Levels with Respect to Human Exposure to Radio Frequency Electromagnetic Fields, 3 kHz to 300 GHz", April 27, 1992

411*Space Radiation Analysis Group, SN31, JSC

412*Smart, D. F. & Shea, M.A., Private Communication

413*Reedy, R. et. al., "Solar Particle Events During the Rising Phase of Solar Cycle 22, Workshop on Ionizing Radiation Environment Models and Methods, Part I, April 16-18, 1991, Huntsville, Alabama

414*Golightly, M.M. , Hardy, A. C., and Hardy, K., "Results of Time Resolved Radiation Exposure Measurements made During US Shuttle Mission with a Tissue Equivalent Proportional Counter," Advances in Space Research, Volume 14, No. 10, pages 923-926, 1994

415*Chambers, R. M., & Hitchcock, L. The effects of acceleration on pilot performance. NADC-MA-6219, Naval Air Development Center, Johnsville, Pennsylvania, 1963

416 *ICRP Report 60, "1990 Recommendations of the International Commission on Radiation Protections (ICRP)

417* Smedal, H.A., et. al., The Psysiological Limitations of Performance During Acceleration, Aerospace Medicine, June 1963

418* Hyde, Alvin S. , The Effect of Back Angle, Molded Support, and Staged Evisceration Upon Intrapulmonary Pressure in Dogs and a Monkey During Forward (+Gx) Acceleration, Tech. Doc. Report AMRL-TDR 62-106, September, 1962

419* "Guidance on Radiation received in Space Activities," National Council on Radiation Protection and Measurement, NCRP Report #98, 7-31-89

APPENDIX C

MSIS GLOSSARY LIST

5th Percentile Oriental Female

Oriental females falling at the 5th percentile based on the size of the oriental female population. The smallest human size considered for design purposes.

95th Percentile Caucasian Male

Caucasian males falling at the 95th percentile based on the size of the Caucasian male population. The largest size considered for design purposes.

Abduction

The movement of a body segment away from the midline of the body or body part to which it is attached.

Acceleration

The time rate of change of velocity.

Acidosis

Reduction of alkali reserve due to excess of acid metabolites.

Actuation force

The force required to operate a mechanical device such as a tool, access door, or fastener.

Acute $C0_2$ Toxicity

Condition of exposure to high-level concentrations of carbon dioxide; associated physiological response.

Adaptive Response

Change in structure, form, or behavior of an organism to suit a new environment.

Adduction

The movement of a body segment or segment combination toward the midline of the body or body part to which it is attached.

Aerobic Power

Aerobic power is the total amount of power an individual generates. It is related to useable power output by an efficiency factor which varies with the task and the individual.

Alveolar Pressure

Gas pressure existing within alveoli.

Alveoli

The air sacs of the lung.

Anatomical Position

A baseline posture for measuring joint motion range. The posture is standing upright, head facing forward, arms hanging down with the palms facing forward.

Annoyance

The sense of being troubled, irritated, or disturbed by unwanted noise

Anoxia

Total lack of oxygen.

Anthropometry

Anthropometry is the application of scientific physical measurement methods to human subjects for the development of engineering design standards and specific requirements and for evaluation of engineering drawings, mock-ups, and manufactured products for the purpose of assuring suitability of these products for the intended user population.

Anxiety

Nervous or fear reaction to perception of danger.

Astigmatism

A defect of an optical system in consequence of which rays from a point fail to meet in a focal point resulting in a blurred and imperfect image.

Atelactasis

Collapsed or airless state of all or part of the lung.

Atmosphere

1) The mixture of gasses surrounding the Earth or filling the habitable volume of a spacecraft.

2) The pressure exerted by a column of mercury 760 mm high at 1 G, equal to 101.329 kilopascals.

Beats

A periodic sound resulting from the interaction of two or more sounds of different frequencies.

Bends

Common symptom of decompression sickness. Caused by gas bubbles in blood stream. Characterized by pain, poorly localized but tending to occur in joints.

Binary Number System

A base 2 number system using only 1's and 0's. Well suited for electronic logic where the 1's and 0's can be represented by signal present and signal absent.

Binaural

Of, relating to, or involving both ears.

Biomechanics

Biomechanics is the interdisciplinary science (comprising mainly anthropometry, mechanics, physiology, and engineering) of the mechanical structure and behavior of biological materials. It concerns primarily the dimensions, composition, and mass properties of body segments; the joints linking the body segments together; the mobility in the joints; the mechanical reactions of the body to force fields, vibrations, and impacts; the voluntary actions of the body in bringing about controlled movements, in applying forces, torques, energy and power to external objects like controls, tools, and other equipment.

Bit-Mapped Graphics

The data that defines the pixel color which is behind the screen pixel.

Blackout

(see Graying of Vision)

Body Envelope

The volume envelope which just encloses the body and body motions during an activity.

Bolus

Used in this document to designate mass of fecal discharge.

Bremsstrahulung

Gamma radiation emitted by an electron when it is deflected by the Coulomb field of an atomic nucleus of charge Z; the fraction of energy radiated as photons by an electron of initial energy E (Mev) is approximated numerically by ZE/1000.

Brightness

The amount of light emitted or reflected from a surface.

Brightness Ratio

The ratio of the luminance of two areas or surfaces.

British Thermal Unit (Btu)

The amount of heat required to raise 1 lb of water 60 degrees F, 1 degree F.

Cabinet

A structural housing into which drawers and shelves are installed. Generally, there is no utility connections between the cabinet and the items installed within it. (See: Housing).

Carcinogenesis

Origin or production of cancer

Cardiac Arrythmias

Periodic irregular heartbeat

Cardiovascular System

Pertaining to the heart and blood vessels.

Cartwheeling

Vernacular descriptive of inertial resultant of human body to rotational acceleration around the x-axis. (Refer to Figure 5.3.1-1.)

Cataractogenesis

Causing the formation of cataracts

Central Acuity

Center part of the visual field.

Cerebral Hemodynamic Effects

Blood circulation and pressure effects in the head.

Chassis Leakage Currents

Currents generated by such internal sources as filter capacitors terminated to accessible parts or ground, and capacitive and inductive coupling to accessible parts or ground. These currents can be conveyed form accessible parts and subsequently applied to a crew member.

Chokes

Syndrome of chest pain, cough, and respiratory distress.

Chronic CO_2 Toxicity

Condition of exposure to long-term, low-level excess concentrations of carbon dioxide, associated physiological response.

Circadian Rhythms

Bodily functions rhythmically fluctuating with time. These functions include heart rate, blood pressure, body temperature, and respiratory volume. Generally, these metabolic functions slow for a period of time once during a 24 hour period. The most important activity geared to circadian rhythms is sleep.

CO_2 Withdrawal

Symptoms arising from cessation of exposure to excess CO_2.

Color Saturation

Saturation is the extent to which an object has more or less color. Saturation is, therefore, relative colorfulness.

Coma

Unconsciousness from which an individual cannot be aroused.

Command Language (command set)

A set of terms, each with a precise function, used to control the operations of a computer.

Contaminants

Unwanted material or bacteria.

Continuous Noise

A noise with negligibly small fluctuations of level within the period of observation

Contrast

The difference between the luminance of an object or figure $C = [(Lc + Lr) - (Ld + Lr)] / (Lc + Ld + 2Lr)$ and its immediate background.

C = Contrast

Lc = Object luminance

Ld = Background luminance

Lr = Reflected luminance

Control

A manually operated hardware item used to operate or change the performance of a machine or system.

Core-Shell Concept

Concept of representing a human as a heat-producing core surrounded by a shell (skin) through which heat exchange with the environment takes place.

Coronary Occlusion

Occlusion of a branch of the arterial system that supplies blood to the heart muscle.

Coulomb Friction

Sliding or kinetic Friction.

Crew Station

Any location where a task or activity is performed. There are two basic types of crew stations: workstation and activity center.

Critical Flicker Fusion Frequency

The frequency at which a flashing light will appear as a steady state light - approximately 65 Hz.

Cyanosis

Bluish tinge in mucous membranes and skin due to excessively reduced hemoglobin In capillaries.

Dark Adaptation

Dark adaptation is the state of being adapted (sensitive) to low levels of ambient luminance (brightness). At any one time the visual system operates well within only a limited range of luminance levels. This range is centered about a particular adaptation level that is determined by the prevailing luminance. As the prevailing luminance changes the adaptation level will also change. The adaptation level shifts more quickly to higher than lower luminance levels.

Dead-Faced

An electrically conductive surface incapable of supplying sufficient energy under normal conditions to present a hazard (e.g., the output of a solid-state switch when in the "STANDBY" state).

Decompression Sickness

Collective term for symptoms caused by gas bubbles formed in body tissues and blood from exposure to rapid decrease in barometric pressure.

Default Values

A value or option automatically provided by the computer system for use in processing when no alternative has been specified by the operator.

Delirium

A *condition of mental confusion, often with hallucinations.*

Denitrogenation

The act of reducing dissolved nitrogen concentration in tissues, usually by breathing mixture devoid of nitrogen.

Dependent Elbow

The elbow being engorged with blood during acceleration.

Design Eye Volume

That volume of space in front of a workstation within which a user's head and eyes should be located to guarantee visual access to all display information. The design of displays and display layout may be guided by a specified design eye volume.

Desquamation

Shedding, peeling, casting off

Diluent Gas

Physiologically inert component of an atmosphere, purpose of which is to reduce oxygen partial pressure-

Direct Contact

The personal contact of a crewmember to electrically powered surfaces.

Direct Glare

Glare produced by a light source located within a person's field-of-view.

Display

Hardware item used to present system information needed by the operator to make decisions for controlling the system.

Door

Used in Section 8.0, Architecture, to denote a full opening body passageway. A door opening is closed with a door cover. A door cannot be sealed against a differential pressure.

Double Insulated Enclosure/Chassis

An enclosure/chassis which incorporates an insulation system comprised of basic insulation and supplementary insulation with the two insulations physically separated and so arrancged that they are not subject to the same deteriorating influences (e.g., temperature, contaminants, and the like) to the same degree.

Drawer

A hardware element designed to slide in and out of a cabinet, rack, or housing. (See: Equipment drawer, Storage drawer)

Dry Bulb Temperature

Air temperature measured by a common thermometer.

Dysbarism

Condition arising from differential pressures between gas pockets in body and ambient. In this document, considered to indicate greater pressure within body cavities.

Dyskinesia

Impaired or abnormal motion of voluntary or involuntary muscles

Dysmetria

Impaired ability to estimate distance in muscular action.

Dyspnea

Difficult or labored breathing.

Ear Clearing

Act of equalizing pressure between inner ear and ambient.

Ebullism

Vaporization of body fluids at body temperature and low barometric pressure.

Edematous Eyelids

Excessive accumulation of fluid in eyelids due to the disturbances of fluid exchange.

Effective Temperature

Empirical sensory index accounting for temperature, humidity and air movement.

Electrical Shock

Sudden stimulation of the nerves and convulsive constriction of the muscles caused by the discharge of electricity through the body.

Emboli

Abnormal particles such as air bubbles circulating in the blood

Embolism

Occlusion of a blood vessel. In the case of gas embolism, by a bubble of gas.

Enclosure/Chassis

The outer casing of an electrical/electronic device.

Enhancement Coding

Any of a variety of techniques used to enhance, or increase the salience of selected items of information (e.g., color coding. It is well suited for interactive computer applications.

Environmental Control

Control of ambient conditions to produce habitable environments.

Equipment Drawer

A drawer used to house subsystem components. The installed components are generally attached to the drawer using fasteners which require tools for attachment/disattachment. It has utility connections to its housing's utility distribution system.

Erythema

Skin reddening (e.g., sun burn)

EVA (Extravehicular Activity)

Activities performed by a space-suited crewmember in an unpressurized or space environment.

EVA Restraint

A means of stabilizing the EVA crewmember which requires physical ingress and egress by the crewmember.

EVA Workstation

Any area at which an EVA task is performed.

Exchange Rate

The increase in sound level (dBA) for which permissible exposure time is halved

Exposure Limit

Maximum safe acceleration exposure limit as a function of vibration frequency and exposure time.

Extension

Straightening or increasing the angle between the parts of the body.

Extravehicular Mobility Unit

An independent anthropometric space suit system that provides crewmembers with environmental protection, life support, mobility, communications, and visibility while performing various EVAs.

Eyeballs Down

Vernacular descriptive of inertial resultant of human body to linear acceleration in the upward + Gz vector. (Refer to Figure 5.3.1-1).

Eyeballs In

Vernacular descriptive of inertial resultant of human body to linear acceleration in the forward -Gx vector. (Refer to Figure 5.3.1-1.)

Eyeballs Left

Vernacular descriptive of inertial resultant of human body to linear acceleration in the left yaw +Gy vector. (Refer to Figure 5.3.1-1.)

Eyeballs Out

Vernacular descriptive of inertial resultant of human body to linear acceleration in the backward +Gx vector. (Refer to Figure 5.3.1-1.)

Eyeballs Right

Vernacular descriptive of inertial resultant of human body to linear acceleration in the right yaw -Gy vector. (Refer to Figure 5.3.1-1.

Eyeballs Up

Vernacular descriptive of inertial resultant of human body to linear acceleration in the downward -Gz vector. (Refer to Figure 5.3.1-1.)

Facility

Equipment or equipment and the area dedicated to a specific crew activity. Similar to the term "Center," but "Facility" can refer to only equipment without specifying an area of use. Examples: Shaving Facilities, Recreation Facility.

Fatigue Decreased Proficiency Boundary

Acceleration boundaries as a function of vibration and exposure time for the preservation of working efficiency.

Flexion

Bending or decreasing the angle between the parts of the body.

Follower

The visual movable indicator on a computer video screen that points to or marks the current position at which a character may be entered.

Foot Restraint

A restraint which stabilizes a crewmember by providing a platform for immobilizing the feet.

Gas Exchange

The flow of gas through a membrane in the small air sacs in the lungs to the blood stream and vice versa.

Gas Tension

The partial pressure exerted by a gas.

Glare

A consequence of bright light sources in the visual field that cause discomfort and/or a decrease in visual functioning. The effect is worse the closer the light source is to the line of gaze. The amount of light scattering within the eye (which varies between individuals effects susceptibility to glare.

Globe Temperature

Physical composite of dry bulb temperature, radiation, and wind effects measured by placing a temperature sensing device in the center of a blackened sphere.

Glottis

Opening between the free margins of the vocal folds.

Graying of Vision

Due to the draining of blood from the occipital region of the brain during acceleration, the vision begins to narrow (tunnel vision) and things appear less bright.

Grayout

(see Graying of Vision)

Grounded Enclosure/Chassis

An enclosure/chassis electrically connected to the ground return.

Gustatory Sensations

Pertaining to the sense of taste.

Habitable Volume

Habitable volume is defined as free, pressurized volume, excluding the space required for equipment, fixtures,

Handhold

A handle or grasp area which is slightly larger than the hand and is used as a mobility aid, hand restraint, or as a hardware mounting surface.

Handrail

A handle or grasp area which is several times longer' than the hand that is used as a mobility aid, hand restraint, or as a hardware mounting surface.

Harmonic

An overtone having a frequency that is an integral multiple of a given primary tone.

Hatch

Used in this document to denote a full body passageway. A hatch opening is closed with a hatch cover. A hatch can be sealed against a differential pressure

Heart Arrhythmia

Lack of rhythm in heart action.

Heat Exhaustion

(Also known as heat prostration) - A syndrome resulting from exposure to high temperatures; characterized by a moist, cold skin, poor circulation, a normal temperature but elevated rectal temperature, restlessness and anxiety.

Heat Stroke

The body temperature rises because of faulty heat dissipation due to high environmental temperature and humidity. Rectal temperatures may go from 106 - 100 deg F.

Hematopoietic

Blood producing

Hemoglobin

Oxygen carrying cells of the blood.

Hemorrhage

Escape of blood from vessels.

Hexadecimal Number System

A base 16 number system used by computers in which each digit represents a power of sixteen. For each digit of a hexadecimal number four digits (24=16) of binary logic are required.

Hierarchical Menu

A set of embedded menus such that entries in all but the lowest level menu will produce another menu when selected.

Housing

A structure into which equipment is installed. (See: Cabinet, Rack)

Hyperbaric

Dealing with ambient pressures which are greater than the gas pressures in the body.

Hyperoxia

Oxygen excess condition arising when greater than normal oxygen partial pressures are encountered.

Hypobaric

Dealing with ambient pressures which are less than the gas pressures within the body.

Hypotension

Low blood pressure

Hypothermia

Subnormal temperature of the body.

Hypoxia

Oxygen deficiency.

Icon

A symbol that graphically resembles its intended meaning (e.g., a schematic drawing or a headlight on the control that is used to control an automobile's headlights).

Illumination

The amount of light (luminance flux) falling on a surface. Measured in lumen/m_2 lux = 0.093 ft-c. Illumination decreases with the square of the distance from a point source.

Impact Acceleration

Pulsed or short-duration accelerations of less than 1 sec. duration.

Impact Noise

See Impulse Noise

Impulse Noise

A noise consisting of one or more bursts of sound energy, each of a duration less than about one second

Inaccessible area

Any area with an opening that will accept a loose and floating object of 10mm (0.4in.) diameter and cannot be retrieved or captured by using a retrieval tool and/or crewmember reaching their hand and forearm into the area.

Inclusions

Tiny particles of foreign matter or air bubbles entrained in glass.

Incontinence

Inability to control the natural evacuation of the feces or urine; specifically, involuntary evacuation due to organic causes.

Infrasonic

Sound at frequencies below the audio range, f 20 Hz

Indirect Contact

The contact of a crewmember to electrically powered surfaces through an electrically conducting medium (e.g., probe, rod).

In-Line Circuit Leakage Currents

Unintentional currents which can flow in a conductor. These currents may result from the inability of solid-state electronics to reach an "infinite" impedance "OFF" state, as is the ability of a mechanical switch. The solid-state electronic device has a finite impedance which undesirably completes the input/output circuit thus providing a means for current to flow. Connections to in-line circuits are normally isolated from crewmember inadvertent contact by barriers and may be considered a hazard if accessible to inadvertent crewmember contact. In-line circuits with leakage currents are referred to as in "STANDBY" when placed in the high impedance state since a complete disconnect is not possible and the circuit output is still energized.

Intermittent Noise

A noise whose level suddenly drops to the level of the background noise several times during the period of observation, the time during which the level remains at a constant value, different from that of the ambient being of the order of magnitude of one second or more

Ischial Tuberoscities

Two bony protuberances in the hip structure. These bones support a major portion of the seated body weight in 1-G conditions.

Isolated Patient Contact

A direct or indirect patient contact that is deliberately separated from the supply circuit and ground by virtue of spacings, insulation, protective impedance, or a combination thereof (e.g. intra-aortic pressure monitor).

Isometric Joystick

The isometric joystick, often referred to as a force joystick or a pressure joystick, is a lever that doesn't move. The output of the isometric joystick is a function of the amount of force applied to it.

Isotonic Joystick

The isotonic joystick, often referred to as a displacement joystick, provides an output which is proportional to the displacement of the joystick from the center.

Keystone Effect

A distortion in the shape of a projected image resulting from the film plane and screen plane not being parallel. Usually, magnification will vary from top to bottom or right to left.

Kinesthetic System

Sensations originating in the sense organs of the muscles, tendons, and joints that provide us with a sense of relative body segment movement and position.

Lacrimation

Crying. tear production.

Lateral Rotation

The turning away from the midline of the body.

Leakage Currents

Unconditional currents which can be applied to a crewmember.

Level Equivalent or L_{eq}

Equivalent sound level or time-average sound level in dB. The level of steady sound which, in a stated time period and at a stated location, has the same A-weighted sound in dB energy as the time-varying sound.

Leukopenia

Lack of white blood cells

Light scatter fraction

The ratio of scattered light to specular reflected light.

Line of sight

The optical axis extending from the observers eyes to the target viewed.

Line of sight deviation

The angle which the line of sight is redirected into the eye due to intervening optically refractive material (e.g., prism).

Linear Acceleration

The rate of change of velocity of a mass; the direction of movement of which is kept constant.

Local Vertical

Local vertical is achieved by a consistent arrangement of vertical cues within a given visual field to provide an definable demarcation at the crew station boundary within the visual field. A consistent local vertical within modules is highly desirable.

Long Term Mission

Any mission in which crewmembers are away from earth for a period greater than two weeks.

Luminance

The photometric equivalent of the brightness of an area as viewed from a given direction. More technically, luminance flux per unit of projected area per unit solid angle. Measured in candela per square meter (cd/m2), footlamberts (ft-L, or millilamberts (mL). 1.0 cd/m2 0.31 mL = 0.29 ft-L. The luminance of a surface does not vary with the distance of the observer from the surface being viewed.

Luminance Ratio

The difference between the luminance of an object and its surroundings.

Masking Noise

A background noise or signal with dynamic range in frequency and level sufficient to obscure another noise or signal from aural awareness

Mean Perception

A mild shock perceived by 50% of the population.

Medial Rotation

The toning toward the midline of the body.

Mediastinal Emphysema

Accumulation of gas in the tissues of the mediastinum.

Menu

A method for inputting information to a computer. The menu is a list of the available input options that may be selected.

Meridional

A line or a plane which is normal to the line of sight.

Metabolism

Physiological activity involving utilization of foodstuffs and oxygen to produce tissues and provide for production of energy.

Micturition

Urinary discharge.

Minification

An image that is smaller than actual size.

Minimal Passageway

A minimal passageway is a translation path which is only large enough to permit passage of a space suited crewmember with his or her long axis in the direction of travel.

Mobility Aid

A device (such as a handle) or a surface (padding which facilitates translation in a microgravity environment.

Narcosis

A state of profound stupor, produced by toxic effect of certain substances, in diluent gas narcosis, by excessive partial pressure of diluent.

Narrow Band Noise

A simple or complex tone having intense and steady state frequency components, relative to wideband noise components, in a very narrow band (1, of the octave band or 5Hz, whichever is less) and is heard as a musical sound either harmonic or discordant.

Nausea

Discomfort in stomach with aversion to food and tendency to vomit.

Neurocirculatory System

Concerned with both nervous and vascular systems.

Neutral Body Posture

The characteristic posture that the relaxed human body assumes in microgravity.

No Sensation

The level of perception only perceived by a fractional percentage of the population.

Noise Cancelling

A technique to delete, neutralize, or counteract any unwanted electrical signal within a communication system that interferes with the sound or image being communicated.

Noise Shields

The physical coverings or shells used to protect or screen any unwanted electrical signal within a communication system that interferes with the sound or image being communicated.

Non-adaptive Response

Pathological response to a new environment which presents conditions beyond an organisms ability to adapt to.

Normoxic

Having a normal level of oxygen.

Nuerocirculatory collapse

R psychosomatic disorder characterized by dyspnea, palpitation, vertigo, faintness, fatigue. Tremor, caused by stress, fear, and violent exercise.

Octal Number System

A base 8 number system in which each digit represents a power of eight. For each digit of an octal number three digits (23 = 8 of binary logic are required.

Octave Band

The band of frequencies where the highest frequency is twice that of the lowest frequency

One-Third Octave Band

The band of frequencies In which the ratio of the extreme frequencies is equal to the cubic root of 2: i.e. fn/fe 1.260, where fn and fe are the highest and lowest cutoff frequencies of the band.

Orbital Replacement Unit (ORU)

A piece of equipment (a single item or module containing an assembly of components) which is designed for removal and replacement as a unit.

Ordinary Patient Connection

A direct patient contact that does not have the spacing, insulation, or protective impedance associated with an isolated patient connection (e.g., blood pressure cuff).

Orthostatic Intolerance

Difficulty in standing erect in a l-G environment. This could be due to any number of effects of exposure to microgravity (cardiovascular, muscular, skeletal, or coordination.

ORU Chassis Leakage Currents

Currents generated by such internal sources as filter capacitors terminated to accessible parts or ground, and capacitive and inductive coupling to accessible parts or ground. These currents can be conveyed from accessible parts to ground or other accessible parts and subsequently applied to a crewmember.

Overall SPL

Overall SPL (Sound Pressure Level) is interpreted as including all noise within the frequency range from 22.4 to 11,200 Hz.

Oxygen Atelectasis

Collapsed or airless state of all or part of a lung.

Oxygen Toxicity

Toxic effects of excess oxygen partial pressure.

Parallax Error

The perceived change in relative position of objects at different distances from an observer when viewed from different positions. Can cause errors in the reading of some instruments.

Paresthesias

A sensation of tingling, crawling, or burning of the skin.

Paroxysm

A sudden increase in the appearance or intensity of symptoms.

Pass-Through

A pass-through is a translation path which is only large enough to permit passage by an IVA clothed crewmember with his or her long axis in the direction of travel.

Passageway

A pass-through area between non-adjacent modules or spaces.

Patient

A crewmember instrumented with electrical/electronic equipment.

Patient Connection Leakage Current

Leakage currents measured between patient leads at the patient interface, or between patient leads at the patient interface and ground.

Pattern Coding

A perceptual indicator used to differentiate areas of interest to the observer, or reduce operator search time.

Peak Pressure Level

Peak sound pressure for any specified time interval is the maximum absolute value of the instantaneous sound pressure in that interval.

Percentile

A point on a scale indicating the percentage of persons within a population who have a body dimension of a certain size or smaller. The value of the statistical variable that marks the boundary between the consecutive intervals in a distribution of 100 intervals, each containing one percent of the total population.

Perception

A mild shock.

Perfusional changes

Changes in the flaw rate of blood in blood vessels 21

Petechial Hemorrhages

A minute, rounded spot of hemorrhage on a surf ace such as skin, mucous membrane, serous membrane, or on a cross-sectional surf ace of an organ.

Photokeraratoconjunctivitis

The action of light that causes an Inflammation of the conjuctiva of the cornea of the eye.

Photokeratitis

Inflammation of the cornea.

Physiologically Inert

Substance that does not Interact chemically with the body.

Physiology

The functions of living organisms.

Pixel Addressability

The capability to store or retrieve from, a specific location in memory, the basic unit or picture element that makes up the image displayed in a video screen.

Pleura

Membrane enveloping the lung and lining the thoracic cavity.

Pneumothorax

The presence of gas in a pleural cavity.

Postrun Headache

Headache that occurs after an event.

Predicted Four-hour Sweat Rate

Empirical index incorporating environment, work and clothing to predict sweat production.

Pre-Emphasis

The intentional alteration of the relative strengths of signals at different frequencies (as in radio and in disc recording) to reduce adverse effects (as noise) in the following parts of the system.

Primary Passageway

A primary passageway is a translation path which accommodates a space suited crewmember in an upright working position or neutral body posture.

Prompt

A message or other signal displayed on a computer generated display advising the operator that he or she is expected to provide some specific response.

Pronation

The rotation of the forearm so that the palm faces downward.

Proxemics

The study of the nature, degree, and effect of the spatial separation individuals naturally maintain (as in various social and interpersonal situations) and of how this separation relates to environmental and cultural factors.

Proximity Operations

Any space module related activity that is performed outside the space module and within a specified boundary.

R value

Ratio of initial nitrogen partial pressure to the final total pressure.

Rack

A structure into which equipment drawers or other types of equipment mounting hardware is installed. A rack generally has a built-in utility distribution system that provides interfaces far connecting the installed equipment's utilities.

Random Noise

A sound whose instantaneous amplitudes occur, as a function of time, according to a normal (Gaussian) distribution curve. Random noise need not have a uniform frequency spectrum.

Reaction Time

The time between the presentation of a stimulus and the beginning of a response to that stimulus.

Reduced Comfort Boundary

Acceleration boundaries as a function of vibration and exposure time for the preservation of comfort.

Remote Operation

An operation which permits personnel to send and receive information or commands to a distant environment.

Replacement Unit

General term that includes Orbital replacement units (ORU), Line replacement units (LRU), and Shop replacement units (SRU).

Respiration

The series of actions resulting in the supply of oxygen to tissues of the body.

Response Time

The time interval during which the actual response to the stimulus is accomplished.

Restraint

A mechanism for restricting unwanted movements of an object or a person in microgravity environments. Restraints can be mechanical (such as a strap) or non-mechanical (magnetism or vacuum.

Reverberation Time

Time required for the average sound energy density in an enclosure to decrease to -60 d B of the initial value after the source has stopped.

Roentgen Equivalents, Man

The absorbed dose of any ionizing radiation which produces the same biological effects in crewmembers as those resulting from the absorption of 1 roentgen of x-rays.

Rotational Acceleration

The rate of change of the direction of a mass, the velocity of which is kept constant. In this regard, the rotational acceleration is directly proportional to the square of the velocity and inversely proportional to the radius of the turn.

Sacrificial surfaces

A protective surf ace placed over a delicate surface which will absorb environmental damage.

Scrolling

An operation or facility of a VDT in which display elements make a continuous bottom-to-top vertical movement across the screen (or window) under control of the operator, with display lines appearing at the bottom edge and dropping off at the top.

Segment

A body segment is the largest dimensional mass which when moved will maintain a constant geometry.

Shock

Physical or emotional trauma; clinical manifestations of inadequate amount of circulating blood. (also see Impact Acceleration)

Shock - Electrical

See Electrical Shock

Shock Load

See Impulse Acceleration

Signal-To-Noise Ratio

The ratio of the amplitude of the signal transmitted through an instrumentation system to the amplitude of the noise generated within the system.

Somersaulting

Vernacular descriptive of inertial resultant of human body to rotational acceleration around the y-axis. (Refer to figure 5.3.1-1.)

Sonic

Sound at frequencies within the range of hearing 20 Hz 20KHz

Space Module

An inhabited establishment away from the earth.

Space Motion Sickness

A malady occurring in approximately 50, of people initially exposed to microgravity. Symptoms are similar to that of motion sickness and last 2-4 days. To date, susceptibility to space motion sickness has not been predictable from responses In a l-G environment. Only limited success has been achieved in controlling space motion sickness.

Specularar Glare

Glare which is created by the image of a light source reflecting off a surface within a person's field-of-view.

Specular Reflection

The reflected image of the light source corresponds very closely in size and shape to the original light source.

Speech Interference Level

The background or sound noise level in dB at frequencies between 150 and 7500 Hz that will result in the loss of intelligibility conversation.

Squeeze

Condition arising when gas pocket is compressed to a smaller size than its normal residual volume.

Standby

A high impedance state of an electronic device, usually to minimize the amount of energy consumed or supplied (e.g., the off state of an electronic switch).

Standard Passageway

A standard passageway is a translation path which accommodates an IVA clothed crewmember in an upright working position or neutral body posture.

Stroke

Common term for apoplexy; hemorrhage into the brain, causing sudden onset of coma and neurological signs.

Subcutaneous Emphysema

Accumulation of gas under the surface of the skin.

Suffusion

A spreading or flow of any fluid of the body into surrounding tissue; an extensive superficial extravasation of blood.

Supination

The rotation of the forearm so that the palm faces upward.

Symbol

A character or graphic that stands for or represents something else such as operations, quantities, elements, relations, or qualities.

Syncope

Sudden loss of strength, fainting.

Teleoperator

A remotely controlled mobility module which incorporates sensory and manipulative subsystems for the purpose of extending the human operator's skills and cognitive capabilities into hostile or remote environments.

Tether

A hook and lanyard which is used to attach a crewmember or a piece of hardware to a piece of hardware.

Thermal Comfort

That condition of mind which expresses satisfaction with the thermal environment. Specifically, when the core temperature is normal, and the rate of body heat storage is zero.

Thermogenesis

Muscular heat production by shivering.

Thermogenesis

Production of heat.

Thermoregulation

Regulation of temperature, particularly self-regulation of body temperature.

Thrombocytopenia

Lack of blood platelets

Tinnitus

Ringing in one or both ears.

Tissue

An aggregation of similar cells and associated with intercellular substance.

Touch Temperature

Temperature of objects in direct physical contact.

Toxicity

The quality of poison; the kind and amount of poison produced by a microorganism

Tracheal Pressure

Gas pressure existing within the trachea (wind pipe).

Translation

To move from one place to another by use of reaction power.

Transmissivity

The proportion of luminous flux which passes completely through a window to the eyes or sensor to the amount of luminous flux incident upon the outside of the window.

Troland

Retinal illuminance resulting from viewing a surface with a luminance of 1 cd/m^2 through an artificial pupil with an area of $1mm^2$.

Tunnel

A passageway which allows the crewmember to move only along his/her longitudinal axis.

Twist

Vernacular descriptive of inertial resultant of human body to rotational acceleration around the z-axis. (Refer to Figure 5.3.1-1.)

Ultrasonic

Sound at frequencies above the audio range, f 20 KHz.

Urethra

The canal that carries urine from the bladder.

Vasoconstriction

Decrease of size of blood vessels to decrease blood flow to the skin to preserve body heat

Vasodialation (Vasodilatation)

Increase of size of blood vessels to allow increased blood flow to the skin to promote heat loss.

Vestibular System

Located in the inner ear, the vestibular system is responsible for the sense of balance (and relative position of the body with respect to the environment). The vestibular system senses acceleration and direction of gravity.

Viewport

A transparency located such that an observer can see from one compartment into another.

Visual acuity

The smallest resolvable detail an observer can see.

Visual Angle

The angle formed at the eye by two imaginary lines drawn to either side of the object in question.

Visual Clutter

Visual clutter results when the quantity of information in a visual display becomes great enough so that it starts to result in information overload. Accuracy and speed of performance will decline as visual clutter increases.

Visual Display Terminal

An electronic device used to present visual information that is usually computer generated. They are used in conjunction width both the Input and output of information. Examples include: cathode ray tub (CRT), liquid crystal diode (LCD, light emitting diode (LED), plasma, and electro-luminescent (EL).

Wavefront Deviation

Any change in the reflected wavefront of a set of rays as compared with the incident wavefront of the same set.

Wet Bulb Glove Temperature

Calculated refinement of globe temperature by weighting dry bulb and wet bulb temperatures with the standard globe temperature.

Wet/Dry Index

Calculated prediction of human stress temperature accounting for wet and dry bulb temperatures.

Wing Tab Connector

An electrical utilities or other connector with two opposed radial tabs to facilitate EVA connect or disconnect.

X-axis

Pack to chest (anatomical)

Y-axis

Right to left side (anatomical)

Z-axis

Foot (or buttocks to head (anatomical).

APPENDIX D

ABBREVIATIONS AND ACRONYMS

USER'S GUIDE

This appendix contains an alphabetized listing of the abbreviations and acronyms used in the text and figures of Volumes I and IV. In the text, these were italicized the first time the abbreviation or acronym was used within a topical section. In most cases, the definition was shown adjacent to this first use.

Additional References for Abbreviations and Acronyms

Users are referred to the following references for official lists of abbreviations and acronyms that are used by NASA and the DOD:

34
MIL-STD-12D, Abbreviations for Use on Drawings, Specifications, and Standards

65
MSFC-STD-350A, Abbreviations for Use in Drawings

93
USAS Y1O.3-1968, Letter Symbols for Quantities Used in Mechanics

ACRONYM	DEFINITION
+Gx	Forward acceleration (see Figure 5.3.1-1)
+Gy	Right yaw acceleration (see Figure 5.3.1-1)
+Gz	Upward acceleration (see Figure 5.3.1-1)
+Rx	Left roll velocity (see Figure 5.3.1-1)
+Ry	Forward pitch down velocity (see Figure 5.3.1-1)
+Rz	Right yaw velocity
- Gx	Backward acceleration (see Figure 5.3.1-1)
- Gy	Left yaw acceleration (see Figure 5.3.1-1)
- Gz	Downward acceleration (&ee Figure 5.3.1-1)
- Rx	Right roll velocity (see Figure 5.3.1-1)
- Ry	Backward pitch up velocity (see Figure 5.3.1-1)
- Rz	Left yaw velocity
1/3 OB	One-third octave band
ACGIH	American Conference of Governmental Industrial Hygienists
ADS	Altitude decompression sickness
AFSC	Air Force Space Command
AI	Articulation index
ALARA	As low as reasonably achievable
AMU	Atomic Mass Unit
ANSI	American National Standards Institute
Ar	Argon
ASHRAE	Amer. Soc.of Heating, Refrig., and Air Conditioning Engrs
ATA	Atmospheres, absolute
a_x	x-axis acceleration
a_y	y-axis acceleration
a_z	z-axis acceleration
BHS	Body heat storage
BIB	Built-in breathing
BITE	Built-in test equipment
BTPS	Body temperature and pressure saturated with water
Btu	British thermal unit
CCTV	Closed circuit television
CFU	Colony forming units
CO_2	Carbon dioxide
CRS	Cosmic ray source
CRT	Cathode ray tube
CWS	Control and warning system
D	Absorbed dose
DACT	Disposable absorbent containment trunk
dB	Decibels
DO	Dry bulb temperature
DCS	Decompression sickness
DE	Dose equivalent
DIPS	Dynamic isotope power system
DOD	Department of Defense

ACRONYM	DEFINITION
e	Electron
ECG	Electrocardiogram
ECLSS	Environmental control and life support system
ED10	10% of pop. showing phsysiolgical response to ionizing rad.
EDK	Electric dynamic katathermometer
EEG	Electroencephalograph
EKG	Electrocardiogram
EL	Exposure limits
ELF	Extremely low frequencies
EM	Electromagnetic
EMU	Extravehicular mobility unit
ET	Effective temperature
ev	Electron volts
EVA	Extravehicular activity
FDA	Food and Drug Administration
FDP	Fatigue decreased proficiency
Fe	Iron
FMEA	Failure modes and effects analysis
FSW	Feet of seawater (33 FSW =1 Atmosphere)
G	Gravitational acceleration
GC/MS	Gas chromatograph/mass spectrometer
GCR	Galactic cosmic radiation
GEO	Geosyncronous Earth orbit
GIAG	Government Industry Advisory Group
GT	Globe temperature
g_x	Vibrational acceleration in the direction of the x-axis
g_y	Vibrational acceleration in the direction of the y-axis
Gy	Gray (radiation dosage unit of measure)
g_z	Vibrational acceleration in the direction of the z-axis
H	Hydrogen
He	Helium
HUT	Hard upper torso
Hx	Diatonic hydrogen
Hz	Hertz (cycles per second)
HZE	Ultra heavy nuclear particles
Icl	Insulation value of clothing
IDB	In-suit drink bag
IEEE	International Electronics and Electrical Engineers
INIRC	International Non-ionizing Radiation Committee
IR	Infrared
IRPA	International Radiation Protection Association
IS0	International Standards Organization
IVA	Intravehicular Activity
JSC	Johnson Space Center
kcal	Kilocalories (1000 calories)
kp	Kilo pascal

ACRONYM	DEFINITION
Kr	Krypton
KSC	Kennedy Space Center
LBNP	Lower body negative pressure
LCVG	Liquid cooling ventilation garment
LD50	Lethal dose of ionizing radiation for 50% of population
LED	Light emitting diode
LEO	Low Earth orbit
L_{eq}	Equivalent level in dB
LET	Linear energy transfer
LOS	Line of sight
LTA	Lower torso assembly
MeV	Millions of electron volts
MFR	Manipulator foot restraint
MIL	Military
mmHg	Millimeters of mercury - used to indicate pressure level
MMU	Manned maneuvering unit
MSFC	Marshall Space Flight Center
MSIS	Man-Systems Integration Standards
MTBF	Mean time between failure
MW	Microwave
N_2	Nitrogen
N/A	Not Applicable
NASA	National Aeronautics and Space Administration
Nc	Convective heat transfer coefficient
NC (Curve)	Noise criteria curve
NCRP	National Council on Radiation Protection and Measurements
Ne	Neon
NIR	Non-ionizing radiation
nm	Nanometer (1E-9 meters); (also) nautical miles
NTU	Nethlometric tubidity units
O_2	Diatonic oxygen
O_2	Oxygen
OASPL	Overall sound pressure level
OB	Octave band
OBS	Operational bioinstrumentation system
ORU	Orbital replacement unit
OSHA	Occupational Safety and Health Administration
OTC	Over the counter
p	Proton
P4SR	Predicted 4-hour sweat rate
PB	Phonetically Balanced
PEO	Polar Earth orbit
PFR	Portable foot restraint
pH	Measure of acidity
PLSS	Primary life support system
PSIL	Preferred speech interference level

ACRONYM	DEFINITION
Pt/Co	Platimun/cobalt color measurement
PTS	Permanent threshold shift
Q	Quality factor
qs	Body heat storage index
Ra	Radium
rads	Radiation dose absorbed by tissue
RBE	Relative biological effectiveness
Rcl	Total heat transfer resistance
RDA	Recommended dietary allowance
REM, rem	Roentgen equivalent man
RF	Radio frequency
RFPG	Radiofrequency protection guides
rms	Root -mean -square
RMS	Remote manipulator system
RTG	Radioisotope thermoelectric generator
SAA	South Atlantic anomaly
SAE	Society of Automotive Engineers
SAR	Specif ic absorption rate
SCR	Solar cosmic radiation
SDMS	Standards Database Management System
SEP	Solar energetic particles
SIL	Speech interference level
SMF	Space medical facility
SPE	Solar particle event
SPF	Specific pathogen free
SPL	Sound pressure level
Sr	Strontium
SSA	Space suit assembly
STD	Standard
STP	Standard temperature and pressure
STS	Space Transportation System
Sv	Sievert (radiation dose unit of measure)
tb	Weighted mean body temperatures
TBT	Total body temperature
tc	Core temperature
TLV	Threshold limit values
TMG	Thermal micrometeoroid garment
Tmrt	Mean radiant temperature
TOC	Total organic carbon
TON	Threshold odor number
tr	Skin temperature
TTN	Threshold taste number
TTS	Temporary threshold shift (hearing)
TTS2	Temporary threshold shift measured 2 minutes after exposure
UCD	Urine collection device
UV	Ultraviolet

ACRONYM	DEFINITION
UVR	Ultraviolet radiation
VDT	Visual display terminal
WB	Wet bulb temperature
WBGT	Wet bulb globe temperature
WD	Wet/dry index
WFI	Water for Injection
WYSIWYG	What you see is what you get
Xe	Xenon
Z	Ultra heavy nuclei

APPENDIX E

UNITS OF MEASURE AND CONVERSION FACTORS

This section presents definitions, physical constants and conversion factors that are used in the text and may be useful as reference data.

ATMOSPHERE (atm):

The pressure exerted by 76 cm mercury with a density of 13.5951 gm/cm^3 at 1g (the standard barometric pressure at sea level).

1 atm = 1.01325 x 10^6 dynes/cm^2
= 1033.2 gm/cm^2
= 760 mm Hg
= 14.696 psi
= 101.329 kPa (kilo Pascals)

BRITISH THERMAL UNIT (Btu):

1 Btu = 1.0559 x 10^{10} ergs
= 1055.9 joules
= 251.995 gm-cal
= 778.77 ft-lbs
= 0.25199 kcal

1 Btu/hr = 0.1667 Btu/min
= 0.04199 kcal/min
= 0.2932 watt

1 Btu/min = 0.25199 kcal\min
= 0.23599 hp
= 17.595 watts

1 Btu/ft^2, hr = 2.7125 kcal/m^2 hr
Btu/hr to joules, 1 Btu/hr = 1.05435 x 10^3 joule/hr
800 Btu/hr x 1054.35 = 843480 joule/hr

CANDELA (cd):

1 cd = 1.018 candle

CANDLE (c):

The unit of luminous intensity.

1 c = 1 lumen/steradian

CENTIMETER (cm):

1 cm = 0.03280 ft
= 0.3937 in
= 0.01 m
= 10mm
= $1 \times 10^4 \mu$ (micron)

(See also Square Centimeter, Cubic Centimeter).

CENTIMETER-CANDLE (phot):

1 *phot* = 1×10^4 *lux*

CENTIMETERS PER SECOND PER SECOND:

1 cm/sec^2 = 0.0328 ft/sec^2

CLO (clo):

The unit of insulation resistance for clothing.

1 clo = 0.18^{o}C m^{2}hr/kcal
= 0.88^{o}F ft^{2}hr/Btu

CUBIC CENTIMETER (cc or cm^3):

1 CC = 3.531×10^{-5} ft^3
= 0.061023 in^3
= 1×10^{-6} m^3
= 1000 mm^3
= 2.6417×10^{-4} gal (US fluid)
= 0.0338 oz (US fluid)

$= 2.113 \times 10^{-3}$ pint (US fluid)

1 cc/sec = 0.0021186 ft^3/min

CUBIC FOOT

1 ft^3 = 1728 in^3
= 28.32 liters
= 0.02832 m^3

1 ft^3/min = 472.0 cc/sec
= 0.4720 liter/sec
= 62.43 lbs H_2O/min

1 ft^3/sec = 1699.3 liters/min

CUBIC INCH:

1 in^3 = 5.787×10^{-4} ft^3
= 1.639×10^{2} liter
= 1.639×10^{-5} m^3

CUBIC METER:

1 m^3 = 35.3144 ft^3
= 6.1023×10^{4} in^3
= 999.973 liters

DECIBEL (db):

Used for comparing power levels, acoustical or electrical.

1 db = $10 \log_{10}$ P/PO where P is the power to be compared to a reference power PO
= 1 bel = increase in power (P) by a factor of 10

(See also Sound Pressure Level).

DEGREE (ANGULAR) (deg):

1 deg = 60 minutes
= 0.01745 radian
= 3600 seconds

1 deg = 3.0462×10^{-2} steradian

DEGREES TO RADIANS:

$1^{o} = \pi/180$ rad

$60^{o} \times \pi/180 = 1.0472 = 1$ rad

DEGREES CENTIGRADE (^{o}C):

$^{o}C = 5/9\ (^{o}F - 32)$

DEGREES FARENHEIT (^{o}F):

$^{o}F = (9/5 \times {}^{o}C) + 32$

DEGREES PER SECOND:

1 deg/sec = 0.017453 radian/sec
= 0.1667 rpm

DYNE (dyne):

1 dyne = 1.0197×10^{-6} kg
= 2.2481×10^{-6} lb

1 dyne-cm = 1 erg

DYNE PER SQUARE CENTIMETER

1 dyne/cm^2 = 9.8692×10^{-7} atm
= 0.0010197 gm/cm^2
= 4.0148×10^{-4} in H_2O
= 7.5006×10^{-4} mm Hg
= 1.4504×10^{-5} psi

ERG (erg):

1 erg = 9.4805×10^{-11} Btu
= 7.3756×10^{-8} ft-lb
= 2.3889×10^{-11} kcal
= 8.8510×10^{-7} lb-in
= 1 dyne-cm

FOOT (ft):

1 ft = 30.48 cm
= 12 in
= 0.3048 m
(See also Square Foot, Cubic Foot).

FOOT-CANDLE (fc):

1 ft-c = 1 lumen/ft^2
= 10.764 lumen/m^2
= 10.75 lux

FOOT-LAMBERT (ft-L):

1 ft-L = 1.0764 millilamberts
= 0.32 decibles with respect to 1 mL

FOOT PER MINUTE:

1 ft/min = 0.3048 m/min
= 0.005080 m/sec
= 0.011364 mph

FOOT PER SECOND:

1 ft/sec = 1.0973 km/hr
= 0.5921 knot
= 0.6818 mph

FOOT-POUND (ft-lb):

1 ft-lb = 0.001285 Btu
= 1.3558×10^{7} ergs
= 3.2389×10^{-4} kcal
1 ft-lb/min = 3.0303×10^{-5} hp
= 0.01667 ft-lb/sec
= 0.022597 watt
1 ft-lb/sec = 0.001818 hp
= 0.01943 kcal/min
= 1.3558 watts

G(g):

The acceleration of gravity (also the acceleration of a vehicle).

1 g = 32.174 ft/sec^2
= 980.665 cm/sec^2

GRAM (gm):

1 gm = 0.001 kg
= 1000 mg
= 0.03527 oz
= 0.0022046 lb
1 gm/cm^3 = 62.428 lbs/ft^3
1 gm/hr = 0.540 lb/day
= 0.0003757 lb/min
1 gm/liter = 0.062427 lb/ft^3
1 gm/cm^2 = 9.6784 x 10^{-4} atm
= 980.665 dynes/cm^2
= 0.9356 mm Hg
= 0.014223 psi
1 gm/m^2/hr = 2.78 x 10^{-5} gm/cm^2/sec
= 0.7448 lb/ft^2/hr

GRAM-CALORIE (gm-cal):

1 gm-cal = 30874 ft-lbs
= 0.001 kcal

GRAY (Gy)):

The SI unit for the amount of ionizing radiation energy absorbed by tissue.

1 Gy = 100 rads

HORSEPOWER (hp):

1 hp = 3.300 x 10^4 ft-lbs/min
= 550 ft-lbs/sec
= 10.688 kcal/min
= 745.7 watts

INCH (in):

1 in = 2.540 cm
= 0.0833 ft
= 25.40 mm
(See also Cubic Inch, Square Inch)

INCH OF WATER (in H_2O):

1 in H_2O = 0.002458 atm
(at 4°C) = 2490.82 dynes/cm^2
= 0.0361 psi
= 1.868 mm Hg

JOULE (joule):

1 joule = 1 watt-sec

KILOGRAM(kg):

1 kg = 1000 gm
= 2.205 lb
= 35.28 oz

KILOGRAM-CALORIE (kcal or large Calorie):

1 kcal = 3.9683 Btu
= 4.186×10^{10} ergs
= 1000 gm-cal
= 3087 ft-lbs
1 kcal/hr = 0.0661 Btu/min
= 0.857 ft-lbs/sec
= 0.1667 kcal/min
= 1.161 watts

1 kcal/m^{2}hr = 0.3687 Btu/ft^{2}hr
1 kcal/min = 3.9685 Btu/min
= 51.457 ft-lbs/sec
= 0.093557 hp
= 69.767 watts

KILOGRAM-CENTIMETER SQUARED:

1 kg-cm^2 = 0.3417 lb-in^2

KILOGRAM-METER PER SECOND:

1 kg-m/sec = 7.2330 ft-lb/sec
= 9.80665 watts

KILOMETER (km):

1 km = 10^5 cm
= 3281 ft
= 10^3 meters, m
= 0.6214 statute miles, mi
= 0.54 nautical miles, nm

KILOPASCAL:

1kPa = 6.895 psi
= 4.754 x 10^5 dynes/cm^2
1 psi = 0.145 kPa

KILOMETERS PER HOUR:

1 km/hr = 0.9113 ft/sec
= 0.5396 knot
= 0.6214 mph

KNOT (nautical mile per hour):

1 knot = 1.689 ft/sec
= 1.853 km/hr
= 1.1516 mph

LAMBERT (L):

Unit of surface brightness.

1L = 0.3183 c/cm^2
= 2.0536 c/in^2
= 1 lumen/cm^2

LITER (l):

1 liter = 0.03531 ft^3
= 61.02 in^3
= 1000 ml
1 liter/min = 5.886 x 10^{-4} ft^3/sec
1 liter/sec = 2.12 ft^3/min

LUMEN (lumen):

1 lumen = 0.001496 watt
= 0.07958 spherical candle power
1 lumen/ft^2 = 1 ft-c
= 10.764 lumen/m^2

LUMENS PER SQ. METER TO FT CANDLES

1 lumen/m^2 = 0.0929 ft. candle

LUX

1 lux = 0.093 ft-c (see meter-candle)

METER (m):

1m = 100 cm
= 3.281 ft

= 39.37 in

(See also Cubic Meter).

METER-CANDLE (lux):

1 lux = 1 lumen/m^2
= 0.092903 ft-c

METER PER SECOND (m/sec):

1 m/sec = 3.281 ft/sec
= 3.600 km/hr
= 2.2369 mph

MICRON (or mu):

A unit of length equal to one-millionth of a meter or one-thousandth of a millimeter, usually called micrometer.

1 μ = 10^{-6} meter
= 3.937×10^{-5} in
= 0.001 mm

MIL (mil):

1 mil = 0.001 in
= 0.0254 mm
= 25.40μ (microns)

MILES (statute) (mi):

1 mi = $1{,}609 \times 10^5$ cm
= 5,280 ft
= 1.609 km

MILES PER HOUR (mph)

1 mph = 88 ft/min
= 1.4667 ft/sec
= 1.6093 km/hr
= 0.8684 knot

MILLIGRAM (mg):

1 mg = 0.001 gm
= 3.5274×10^{-5} oz
= 2.2046×10^{-6} lb
1 mg/m^3 = 6.243×10^{-4} lb/ft^3

MILLILAMBERT (ml):

1 mL = 0.929 lumen/ft^2
(perfectly diffused light)

MILLILITER (ml):

1 ml = 1.000028 cc
= 0.061025 in^3
= 0.001 liter
= 0.0338 oz (US fluid)

MILLILITERS PER HOUR:

1 ml/hr = 0.06102 in^3/hr

MILLIMETER (mm):

1mm = 0.10 cm
= 0.03937 in
= 1000 μ
(See also Square Millimeter).

MILLIMETER OF MERCURY (mm Hg):

1mm Hg = 0.0013158 atm

(at 0^oC) = 1333.22 dyne/cm^2
= 1.3595 gm/cm^2
= 0.019337 psi
= 0.535 in H_2O
= 0.1333 kPa

MILLISECONDS (msec):

1 msec = 0.001 sec

NAUTICAL MILES (nm):

1 nm = 0.87 statute miles
= 1.85 kilometers

NEWTON (N):

The unit of force in the mks system equal to 0.2248 lbf.

NEWTONS TO POUNDS:

1 N = 0.22507 lbf

NEWTON CENTIMETERS TO INCH OUNCES:

1 N-cm = 1/.706 in oz
70N-cm x 1/.706 = 99.15 = 100 in oz

NEWTON METERS TO FOOT POUNDS:

1Nm = 1/1.356 ft lb
15Nm x 1/1.356 = 11.06 = 11 ft lb

NEWTON METERS TO INCH POUNDS:

1 Nm = 1/.11298 in lb
4 Nm x 1/.11298 = 35.4 = 3 5 in lb

NIT:

Unit of luminence equal to the luminence provided by one candle of radiant flux emited per square meter of surface
Candela per square meter (Cd m^2)

OUNCE (oz):

1 oz = 28.3495 gm
= 0.0625 lb

PASCALS (Pa)

Pa = 4.75389 dynes/cm^2
= 6.895×10^{-3} psi

PARTS PER MILLION (ppm).

1 ppm = 1.0 mg/liter of H_2O
= 8.345 lbs/million gallons

PHON (phon):

1 phon unit = SPL of a 1000 cycle/sec tone

PHOT:

(See Centimeter Candle).

POISE:

Unit of viscosity.
1 poise = 1 dyne/sec, cm^2
= 1 gm/cm, sec
= 0.067196 lb/ft, sec

POUND (lb):

1 lb = 453.5924 gm

= 0.45359 kg
= 16 oz
= 4.448 N

1 lb/day = 18.89 gm/hr
1 lb/hr = 0.7559 gm/min
= 10.886 kg/day

POUND-INCH (lb-in):

1 lb-in = 1.1298×10^6 dyne/cm

POUND-INCH SQUARED:

Unit of moment of inertia.
1 lb-in^2 = 2.9264 kg-cm^2

POUND OF WATER PER MINUTE (lb H_2O/min):

1 lb H_2O/min = 0.01603 ft^3/min
= 2.670×10^{-4} ft^3/sec

POUND PER CUBIC FOOT (lb/ft^3):

1 lb/ ft^3 = 0.01602 gm/ cm^3

POUNDS PER SQUARE INCH (psi):

1 psi = 0.06805 atm
= 6.8947×10^4 dyne/cm^2
= 70.307 gm/cm^2
= 51.715 mmHg
= 27.7 in H_2O
= 145.03 Pa

POUNDS PER SQUARE INCH ABSOLUTE (psia):

Absolute pressure, where 0 psia = vacuum
= 0.1449 kpascals

POUND WEIGHT (1 wt):

1 lb wt = 4.4482×10^5 dynes
= 453.59 gm wt
= 16 oz

RAD (rad):

Radiation absorbed dose.
1 rad = 100 ergs/gm of irradiated material

RADIAN (rad):

1 radian = $1/2\pi$ circumference revolution (0.15915)
= 57.296 deg
1 radian/sec = 57.296 deg/sec
= 9.549 rpm
1 radian/sec^2 = 572.96 rpm^2

REVOLUTIONS PER MINUTE (rpm):

1 rpm = 6 deg/sec
= 0.10472 radian/sec
1 rpm^2 = 0.001745 radian/sec^2

ROENTGEN (r):

1 r = ionization by x-rays or gamma-rays producing 1 electrostatic unit of charge in 1 cm^3 of air (STP)
= 83.0 ergs/gm

SIEVIERT (Sv):

Sv is the SI unit for ionizing radiation dose equivalent
1 Sv = 100 rem = (Gy) (Q)
(Refer to Figure 5.7.2.1.3.1-1 for definition of Q values)

SOUND PRESSURE LEVEL (SPL):

SPL is sound pressure related logarithmically to a reference level of pressure (P_0), which by convention is 0.0002 dynes/cm^2. The defining equation is:

$$SPL = 20 \log_{10} P/PO \text{ in decibels}$$

SQUARE CENTIMETER (cm^2):

$$1 \text{ cm}^2 = 1.076 \times 10^{-3} \text{ ft}^2$$
$$= 0.1550 \text{ in}^2$$
$$= 100 \text{ mm}^2$$

SQUARE FOOT (ft^2):

$$1 \text{ ft}^2 = 929.0 \text{ m}^2$$
$$= 144 \text{ in}^2$$

SQUARE INCH (in^2):

$$1 \text{ in}^2 = 6.4516 \text{ cm}^2$$
$$= 0.006944 \text{ ft}^2$$
$$= 645.1626 \text{ mm}^2$$

SQUARE MILLIMETER (mm^2):

$$1 \text{ mm}^2 = 0.01 \text{ cm}^2$$
$$= 0.001550 \text{ in}^2$$

STERADIAN:

The solid angle which encloses a surface on a sphere equal to the square of the radius.

USEFUL PHYSICAL CONSTANTS

Acceleration of gravity (g) = 32.17 ft/sec2
= 980.6 cm/sec^2

Velocity of sound in dry air @0°C = 33,136 cm/second

and 1 atmos. = 1,089 feet/second

Heat of fusion of water	= 79.7 calories/gram
@1.0 atmos.	= 144 Btu/pound
Heat of vaporization of water	= 540 calories/gram
@ 1.0 atmos.	= 970 Btu/pound
Specific heat of air	= Cp = 0.238 cal/gram (^{o}C)
Density of water @ 0°C	= .099984 grams/cm^3
Density of air @ 0°C and 760 mm Hg	= 0.0012929 grams/cm^3(0.0807 lb/ft^3)
Velocity of light (c)	= $2.99792458 \times 10^{10}$ cm/sec
Avogradro's number (N)	= 6.0221367×10^{23} molecules/gram-mole
Pi(π)	= 3.14159265
Naperian-logarithm base	= 2.71828183

APPENDIX F

UNRESOLVED DATA PROBLEMS AND ISSUES

(This appendix has been deleted from this volume)

APPENDIX G

ACCELERATION REGIME APPICABILITY

USER'S GUIDE

One of the unique features of the MSIS data base is that every paragraph has been coded as to the acceleration regimes that are applicable. Immediately following each paragraph number and title, a notation is made in brackets { } with one or two of the following codes:

O = Orbital

= the zero-g and near zero-g acceleration environments encountered in orbital and very low acceleration transorbital operations

L = Launch/Re-Entry

= the multi-g launch, re-entry, and abort acceleration environments.

P = Planetary

= the g-loads encountered on the moon and Mars. Long term, low-level accelerations encountered in some transorbital flight operations may also be applicable. An artificial gravity system may also fall into this regime.

A = All

=this regime includes all of the above plus the 1-g acceleration environment.

(blank)

=none of the above apply.

This appendix of a relational data base searching function in the Standards Relational Data base System (SDMS) can be used to locate all of the applicable MSIS data for a hardware program's specific acceleration regimes.

Paragraph No	All	Orbital	Launch/ReEntry	Planetary
1.0	X			
1.1	X			
1.2	X			
1.3	X			
1.4	X			
1.4.1	X			
1.4.2	X			
1.4.3	X			
1.4.3.1	X			
1.4.3.2	X			
1.4.3.3	X			
1.4.3.4	X			
1.4.3.5	X			
1.4.4	X			
1.5	X			
2.0	X			
2.1	X			
2.2	X			
2.2.1	X			
2.2.2	X			
2.3	X			
2.3.1	X			
2.3.2	X			
3.0	X			
3.1	X			
3.1.1	X			
3.1.2	X			
3.2	X			
3.2.1	X			
3.2.2	X			
3.2.3	X			
3.2.3.1		X		
3.2.3.2	X			
3.2.3.3	X			
3.3	X			
3.3.1	X			
3.3.1.1	X			
3.3.1.2	X			
3.3.1.3	X			
3.3.2	X			
3.3.2.1	X			
3.3.2.2	X			
3.3.2.2.1	X			

Paragraph No	All	Orbital	Launch/ReEntry	Planetary
3.3.2.2.2	X			
3.3.2.2.3	X			
3.3.2.3	X			
3.3.2.3.1	X			
3.3.2.3.2	X			
3.3.3	X			
3.3.3.1	X			
3.3.3.2	X			
3.3.3.2.1	X			
3.3.3.2.2	X			
3.3.3.2.3	X			
3.3.3.2.4	X			
3.3.3.2.5	X			
3.3.3.2.6	X			
3.3.3.3	X			
3.3.3.3.1	X			
3.3.3.3.2			X	
3.3.4		X		
3.3.4.1		X		
3.3.4.2		X		
3.3.4.3	X			
3.3.5	X			
3.3.5.1	X			
3.3.5.2	X			
3.3.5.3	X			
3.3.6	X			
3.3.6.1	X			
3.3.6.2	X			
3.3.6.3	X			
3.3.6.3.1	X			
3.3.6.3.2	X			
3.3.7	X			
3.3.7.1	X			
3.3.7.2	X			
3.3.7.3	X			
3.3.7.3.1	X			
3.3.7.3.1.1	X			
3.3.7.3.1.2	X			
3.3.7.3.2	X			
3.3.7.3.2.1	X			
3.3.7.3.2.2	X			

Paragraph No	All	Orbital	Launch/ReEntry	Planetary
3.3.7.3.3	X			
3.3.7.3.3.1	X			
3.3.7.3.3.2	X			
4.0	X			
4.1	X			
4.2	X			
4.2.1	X			
4.2.2	X			
4.3	X			
4.3.1	X			
4.3.2	X			
4.3.2.1	X			
4.3.2.2	X			
4.4	X			
4.4.1	X			
4.4.2	X			
4.4.2.1	X			
4.4.2.2	X			
4.5	X			
4.5.1	X			
4.5.2		X		
4.5.2.1		X		
4.5.2.2		X		
4.6	X			
4.6.1	X			
4.6.2		X		
4.7	X			
4.7.1	X			
4.7.2		X		
4.8		X		
4.8.1		X		
4.8.2		X		
4.9	X			
4.9.1	X			
4.9.2		X		
4.9.3		X		
4.10	X			
4.10.2	X			
4.11	X			
4.11.1	X			
4.11.2	X			
4.11.3	X			
5.0	X			

Paragraph No	All	Orbital	Launch/ReEntry	Planetary
5.1	X			
5.1.1	X			
5.1.2	X			
5.1.2.1	X			
5.1.2.1.1	X			
5.1.2.1.2	X			
5.1.2.1.3	X			
5.1.2.1.4	X			
5.1.2.1.4.1	X			
5.1.2.1.4.2	X			
5.1.2.1.4.3	X			
5.1.2.2	X			
5.1.2.2.1	X			
5.1.2.2.1.1	X			
5.1.2.2.1.2	X			
5.1.2.2.1.3	X			
5.1.2.2.1.4	X			
5.1.2.2.1.5	X			
5.1.2.2.1.6	X			
5.1.2.2.1.7	X			
5.1.2.2.1.7.1	X			
5.1.2.2.1.7.2	X			
5.1.2.2.1.7.3	X			
5.1.2.3.	X			
5.1.2.3.1	X			
5.1.2 3.2	X			
5.1.2.3.3	X			
5.1.3	X			
5.1.3.1	X			
5.1.3.2	X			
5.1.3.3	X			
5.1.3.4	X			
5.1.3.4.1	X			
5.1.3.4.2	X			
5.1.3.4.3		X	X	X
5.2		X		
5.2.1		X		
5.2.2		X		
5.2.2.1		X		
5.2.2.2.		X		
5.2.3		X		
5.3	X			
5.3.1	X			

Paragraph No	All	Orbital	Launch/ReEntry	Planetary
5.3.2	X			
5.3.2.1	X			
5.3.2.1.1	X			
5.3.2.1.2	X			
5.3.2.1.3	X			
5.3.2.2	X			
5.3.2.2.1	X			
5.3.2.2.2	X			
5.3.2.2.3	X			
5.3.2.3	X			
5.3.2.4	X			
5.3.3	X			
5.3.3.1	X			
5.3.3.1.1	X			
5.3.3.2	X			
5.3.3.3	X			
5.4	X			
5.4.1	X			
5.4.2	X			
5.4.2.1	X			
5.4.2.1.1			X	
5.4.2.1.2		X		
5.4.2.1.3			X	
5.4.2.2	X			
5.4.2.3	X			
5.4.2.3.1	X			
5.4.2.3.2	X			
5.4.2.3.3	X			
5.4.2.4	X			
5.4.2.4.1	X			
5.4.2.4.1.1	X			
5.4.2.4.1.1.1	X			
5.4.2.4.1.1.2	X			
5.4.2.4.1.2	X			
5.4.2.4.2	X			
5.4.2.4.2.1	X			
5.4.2.4.2.2	X			
5.4.2.4.3	X			
5.4.2.4.3.1	X			
5.4.2.4.3.2	X			
5.4.3	X			
5.4.3.1	X			
5.4.3.2	X			

Paragraph No	All	Orbital	Launch/ReEntry	Planetary
5.4.3.2.1	X			
5.4.3.2.1.1	X			
5.4.3.2.1.2	X			
5.4.3.2.1.3	X			
5.4.3.2.1.4	X			
5.4.3.2.1.5	X			
5.4.3.2.2	X			
5.4.3.2.2.1	X			
5.4.3.2.2.2	X			
5.4.3.2.3	X			
5.4.3.2.3.1	X			
5.4.3.2.3.2	X			
5.4.3.2.3.3	X			
5.4.3.2.3.4	X			
5.4.3.2.4	X			
5.4.3.2.5	X			
5.4.4	X			
5.4.4.1	X			
5.4.4.2	X			
5.4.4.3	X			
5.5	X			
5.5.1	X			
5.5.2	X			
5.5.2.1	X			
5.5.2.1.1			X	
5.5.2.1.2		X		X
5.5.2.1.3			X	
5.5.2.2	X			
5.5.2.3	X			
5.5.2.3.1	X			
5.5.2.3.2	X			
5.5.2.3.3	X			
5.5.2.4	X			
5.5.2.4.1	X			
5.5.2.4.2	X			
5.5.2.4.3	X			
5.5.2.4.4	X			
5.5.3	X			
5.5.3.1	X			
5.5.3.2	X			
5.5.3.2.1	X			
5.5.3.2.2	X			
5.5.3.2.3	X			

Paragraph No	All	Orbital	Launch/ReEntry	Planetary
5.5.3.2.4	X			
5.5.3.2.5	X			
5.5.3.3	X			
5.5.3.3.1			X	
5.5.3.3.2	X			
5.5.3.3.3	X			
5.5.3.3.4	X			
5.5.4	X			
5.5.4.1	X			
5.5.4.2	X			
5.5.4.3	X			
5.6	X			
5.7	X			
5.7.1	X			
5.7.2	X			
5.7.2.1	X			
5.7.2.1.1	X			
5.7.2.1.2	X			
5.7.2.1.2.1	X			
5.7.2.1.2.2	X			
5.7.2.1.2.3	X			
5.7.2.1.2.4	X			
5.7.2.1.3	X			
5.7.2.1.3.1	X			
5.7.2.1.3.2	X			
5.7.2.1.3.3	X			
5.7.2.1.3.3.1	X			
5.7.2.1.3.3.2	X			
5.7.2.1.3.3.3	X			
5.7.2.1.3.3.4	X			
5.7.2.1.3.3.5	X			
5.7.3.1.3.3.6	X			
5.7.2.1.3.4	X			
5.7.2.1.4	X			
5.7.2.1.4.1	X			
5.7.2.1.4.2	X			
5.7.2.1.4.3	X			
5.7.2.1.4.4	X			
5.7.2.1.4.5	X			
5.7.2.1.4.6	X			
5.7.2.1.5	X			
5.7.2.2	X			
5.7.2.2.1	X			

Paragraph No	All	Orbital	Launch/ReEntry	Planetary
5.7.2.2.2	X			
5.7.2.2.3	X			
5.7.2.2.4	X			
5.7.3	X			
5.7.3.1	X			
5.7.3.1.1	X			
5.7.3.1.2	X			
5.7.3.1.3	X			
5.7.3.1.4	X			
5.7.3.2	X			
5.7.3.2.1	X			
5.7.3.2.2	X			
5.8	X			
5.8.1	X			
5.8.2	X			
5.8.2.1	X			
5.8.2.2	X			
5.8.2.2.1	X			
5.8.2.2.2	X			
5.8.2.2.2.1	X			
5.8.2.2.3	X			
5.8.2.2.4	X			
5.8.2.2.5	X			
5.8.3	X			
5.8.3.1	X			
5.8.3.2	X			
5.9	X			
5.9.1	X			
5.9.2	X			
6.0	X			
6.1	X			
6.2	X			
6.2.1	X			
6.2.2	X			
6.2.2.1	X			
6.2.2.2	X			
6.2.3	X			
6.3	X			
6.3.1	X			
6.3.2	X			
6.3.3	X			
6.3.3.1	X			
6.3.3.2	X			

Paragraph No	All	Orbital	Launch/ReEntry	Planetary
6.3.3.3	X			
6.3.3.4	X			
6.3.3.5	X			
6.3.3.6	X			
6.3.3.7	X			
6.3.3.8	X			
6.3.3.9	X			
6.3.3.10	X			
6.3.3.11	X			
6.3.4	X			
6.4	X			
6.4.1	X			
6.4.2	X			
6.4.2.1	X			
6.4.2.1.1	X			
6.4.2.2	X			
6.4.2.2.1	X			
6.4.2.3	X			
6.4.2.4	X			
6.4.3	X			
6.4.3.1	X			
6.4.3.1.1	X			
6.4.3.2	X			
6.4.3.3	X			
6.4.3.4	X			
6.4.3.5	X			
6.4.3.6	X			
6.4.3.7	X			
6.4.3.8	X			
6.4.3.9	X			
6.4.3.10	X			
6.4.3.11	X			
6.4.3.12	X			
6.4.3.13	X			
6.4.3.13.1	X			
6.4.3.14	X			
6.4.3.15	X			
6.4.3.15.1	X			
6.4.3.16	X			
6.4.3.17	X			
6.4.3.18	X			
6.4.3.18.1	X			
6.4.3.18.1.1	X			

Paragraph No	All	Orbital	Launch/ReEntry	Planetary
6.4.3.18.1.2	X			
6.4.3.18.2	X			
6.4.3.18.2.1	X			
6.4.3.18.2.2	X			
6.4.3.18.2.3	X			
6.4.3.18.2.4	X			
6.4.3.18.2.5	X			
6.4.3.19	X			
6.5	X			
6.5.1	X			
6.5.2	X			
6.5.3	X			
6.6	X			
6.6.1	X			
6.6.2	X			
6.6.3	X			
6.6.3.1	X			
6.6.3.1.1	X			
6.6.3.1.2	X			
6.6.3.2	X			
6.6.3.2.1	X			
6.6.3.2.2	X			
6.6.3.2.3	X			
6.6.3.3	X			
6.6.3.4	X			
6.7	X			
6.7.1	X			
6.7.2	X			
6.7.3	X			
6.7.4	X			
6.7.5	X			
7.0		X		X
7.1	X			
7.2	X			
7.2.1	X			
7.2.2	X			
7.2.2.1	X			
7.2.2.2	X			
7.2.2.2.1	X			
7.2.2.2.2	X			
7.2.2.2.3	X			
7.2.2.3	X			
7.2.2.3.1	X			

Paragraph No	All	Orbital	Launch/ReEntry	Planetary
7.2.2.3.2	X			
7.2.2.4		X		X
7.2.3		X		X
7.2.3.1		X		X
7.2.3.2		X		X
7.2.3.3		X		X
7.2.3.3.1		X		X
7.2.3.3.2		X		X
7.2.3.3.2.1		X		X
7.2.3.3.2.2		X		X
7.2.3.3.3		X		X
7.2.3.4		X		X
7.2.3.4.1		X		X
7.2.3.4.2		X		X
7.2.3.4.3		X		X
7.2.4	X			
7.2.4.1	X			
7.2.4.2	X			
7.2.4.3	X			
7.2.5	X			
7.2.5.1	X			
7.2.5.2	X			
7.2.5.1	X			
7.2.5.2	X			
7.2.5.3	X			
7.2.5.3.1	X			
7.2.5.3.2	X			
7.2.5.3.3	X			
7.2.5.3.4	X			
7.2.5.3.5	X			
7.2.5.3.6	X			
7.2.6	X			
7.2.6.1	X			
7.2.6.2	X			
7.2.6.3	X			
7.2.7	X			
7.2.7.1	X			
7.2.7.2	X			
7.2.7.2.1	X			
7.2.7.2.2	X			
7.2.7.2.2.1	X			
7.2.7.2.2.2	X			
7.2.7.2.2.3	X			

Paragraph No	All	Orbital	Launch/ReEntry	Planetary
7.2.7.3	X			
7.2.7.3.1	X			
7.2.7.3.2	X			
7.2.7.3.2.1	X			
7.2.7.3.2.2	X			
7.2.7.3.2.3	X			
7.2.7.3.2.4	X			
7.2.7.3.3	X			
7.2.8	X			
7.3	X			
7.3.1	X			
7.3.2	X			
7.3.2.1	X			
7.3.2.2	X			
7.3.2.3	X			
7.3.3	X			
7.3.3.1	X			
7.3.3.2	X			
7.3.3.3	X			
7.3.3.4	X			
7.4	X			
7.4.1	X			
7.4.2	X			
7.4.3	X			
7.4.3.1	X			
7.4.3.2	X			
8.0	X			
8.1	X			
8.2	X			
8.2.1	X			
8.2.2	X			
8.2.2.1		X		
8.2.2.2	X			
8.2.2.3	X			
8.2.2.4	X			
8.2.2.5	X			
8.2.2.6	X			
8.2.2.7	X			
8.2.2.8	X			
8.2.3	X			
8.2.3.1	X			
8.2.3.2	X			
8.3	X			

Paragraph No	All	Orbital	Launch/ReEntry	Planetary
8.3.1	X			
8.3.2	X			
8.3.2.1	X			
8.3.2.2	X			
8.3.3	X			
8.3.3.1	X			
8.3.3.2	X			
8.4		X		
8.4.1		X		
8.4.2		X		
8.4.3		X		
8.4.4		X		
8.5	X			
8.5.1	X			
8.5.2	X			
8.5.2.1	X			
8.5.2.2	X			
8.5.3	X			
8.5.3.1	X			
8.5.3.2	X			
8.5.3.3	X			
8.5.3.4	X			
8.6	X			
8.6.1	X			
8.6.2	X			
8.6.2.1	X			
8.6.2.2	X			
8.6.2.3	X			
8.6.2.4	X			
8.6.3	X			
8.6.3.1	X			
8.6.3.2	X			
8.6.4		X		
8.6.4.1		X		
8.6.4.2		X		
8.6.4.3		X		
8.7	X			
8.7.1	X			
8.7.2	X			
8.7.2.1	X			
8.7.2.2		X		
8.7.2.3		X		
8.7.3	X			

Paragraph No	All	Orbital	Launch/ReEntry	Planetary
8.7.3.1	X			
8.7.3.2	X			
8.7.3.3	X			
8.7.3.4	X			
8.8	X			
8.8.1		X		
8.8.2		X		
8.8.3	X			
8.8.3.1		X		
8.8.3.2		X		
8.8.3.3	X			
8.8.3.4	X			
8.9		X		
8.9.1		X		
8.9.2		X		
8.9.2.1		X		
8.9.2.2		X		
8.9.3		X		
8.9.3.1		X		
8.9.3.2		X		
8.9.4		X		
8.10	X			
8.10.1	X			
8.10.2	X			
8.10.3	X			
8.10.3.1	X			
8.10.3.2	X			
8.10.3.3	X			
8.10.3.4	X			
8.10.3.5	X			
8.10.3.6	X			
8.10.3.7	X			
8.10.4	X			
8.11	X			
8.11.1	X			
8.11.2	X			
8.11.2.1	X			
8.11.2.2	X			
8.11.3	X			
8.12	X			
8.12.1	X			
8.12.2	X			
8.12.2.1	X			

Paragraph No	All	Orbital	Launch/ReEntry	Planetary
8.12.2.2	X			
8.12.2.3	X			
8.12.2.4	X			
8.12.3	X			
8.12.3.1	X			
8.12.3.2	X			
8.12.3.4	X			
8.12.3.5	X			
8.12.3.6	X			
8.13	X			
8.13.1	X			
8.13.2	X			
8.13.2.1	X			
8.13.2.2	X			
8.13.2.3	X			
8.13.2.4	X			
8.13.2.5	X			
8.13.2.6	X			
8.13.2.7	X			
8.13.3	X			
8.13.3.1	X			
8.13.3.1.1	X			
8.13.3.1.2	X			
8.13.3.1.3	X			
8.13.3.1.4	X			
8.13.3.2	X			
8.13.3.2.1	X			
8.13.3.2.2	X			
8.13.3.2.3	X			
8.13.3.3	X			
8.13.3.4	X			
8.13.3.5	X			
8.13.3.6	X			
9.0	X			
9.1	X			
9.2	X			
9.2.1	X			
9.2.2	X			
9.2.2.1	X			
9.2.2.1.1	X			
9.2.2.1.2	X			
9.2.2.1.3	X			
9.2.2.2	X			

Paragraph No	All	Orbital	Launch/ReEntry	Planetary
9.2.2.2.1	X			
9.2.2.2.2	X			
9.2.2.2.3	X			
9.2.2.2.4	X			
9.2.2.2.5	X			
9.2.2.2.6	X			
9.2.3	X			
9.2.3.1	X			
9.2.3.2	X			
9.2.3.2.1.	X			
9.2.3.2.2	X			
9.2.3.2.3	X			
9.2.3.2.4.	X			
9.2.3.2.5	X			
9.2.3.2.6	X			
9.2.3.2.7	X			
9.2.3.2.8	X			
9.2.3.2.9	X			
9.2.3.2.10	X			
9.2.4	X			
9.2.4.1	X			
9.2.4.1.1	X			
9.2.4.2	X			
9.2.4.2.1	X			
9.2.4.2.2	X			
9.2.4.2.3	X			
9.2.5	X			
9.2.5.1	X			
9.2.5.1.1	X			
9.2.5.1.2	X			
9.2.5.2	X			
9.2.5.2.1	X			
9.2.5.2.2		X		X
9.2.6	X			
9.3	X			
9.3.1	X			
9.3.2	X			
9.3.2.1	X			
9.3.2.2	X			
9.3.3	X			
9.3.3.1	X			
9.3.3.2	X			
9.3.3.3	X			

Paragraph No	All	Orbital	Launch/ReEntry	Planetary
9.3.3.3.1	X			
9.3.3.3.2	X			
9.3.3.3.3	X			
9.3.3.3.4	X			
9.3.3.3.5	X			
9.3.3.3.6	X			
9.3.3.3.7	X			
9.3.3.3.8	X			
9.3.3.3.9	X			
9.3.3.3.10	X			
9.3.3.3.11	X			
9.3.3.3.12	X			
9.3.3.3.13	X			
9.3.3.3.14	X			
9.3.3.3.15	X			
9.3.3.3.16	X			
9.3.3.3.17	X			
9.3.3.4	X			
9.3.3.4.1	X			
9.3.3.4.1.1	X			
9.3.3.4.1.2	X			
9.3.3.4.2	X			
9.3.3.4.3	X			
9.3.3.4.4	X			
9.3.3.4.5	X			
9.3.3.4.6	X			
9.3.3.4.7	X			
9.3.3.4.8	X			
9.3.3.5	X			
9.3.3.6	X			
9.3.3.7	X			
9.3.4	X			
9.4	X			
9.4.1	X			
9.4.2	X			
9.4.2.1	X			
9.4.2.2	X			
9.4.2.3	X			
9.4.2.3.1	X			
9.4.2.3.1.1	X			
9.4.2.3.1.2	X			
9.4.2.3.1.3	X			
9.4.2.3.1.4	X			

Paragraph No	All	Orbital	Launch/ReEntry	Planetary
9.4.2.3.1.5	X			
9.4.2.3.2	X			
9.4.2.3.3	X			
9.4.2.3.3.1	X			
9.4.2.3.3.2	X			
9.4.2.3.3.3	X			
9.4.2.3.3.4	X			
9.4.2.3.3.5	X			
9.4.2.3.3.6	X			
9.4.2.3.3.7	X			
9.4.2.3.3.8	X			
9.4.2.3.3.9	X			
9.4.2.3.3.10	X			
9.4.2.3.4	X			
9.4.3	X			
9.4.3.1	X			
9.4.3.2	X			
9.4.3.3	X			
9.4.3.3.1	X			
9.4.3.3.2	X			
9.4.3.3.3	X			
9.4.3.3.4	X			
9.4.4	X			
9.4.4.1	X			
9.4.4.2	X			
9.4.4.3	X			
9.4.4.3.1	X			
9.4.4.3.1.1	X			
9.4.4.3.1.2	X			
9.4.4.3.1.3	X			
9.4.4.3.2	X			
9.4.4.3.3	X			
9.4.4.3.4	X			
9.4.4.3.4.1	X			
9.4.4.3.4.2	X			
9.4.4.3.4.3	X			
9.4.5	X			
9.4.5.1	X			
9.4.5.1.1	X			
9.4.5.1.2	X			
9.5	X			
9.5.1	X			
9.5.2	X			

Paragraph No	All	Orbital	Launch/ReEntry	Planetary
9.5.3	X			
9.5.3.1	X			
9.5.3.1.1	X			
9.5.3.1.2	X			
9.5.3.1.3	X			
9.5.3.1.4	X			
9.5.3.1.5	X			
9.5.3.1.6	X			
9.5.3.1.7	X			
9.5.3.1.8	X			
9.5.3.1.9	X			
9.5.3.1.10				
9.5.3.1.11	X			
9.5.3.1.12	X			
9.5.3.1.13	X			
9.5.3.1.14	X			
9.5.3.1.14.1	X			
9.5.3.1.14.2	X			
9.5.3.1.14.3	X			
9.5.3.1.14.4	X			
9.5.3.1.14.5	X			
9.5.3.1.14.6	X			
9.5.3.1.14.7	X			
9.5.3.1.14.8	X			
9.5.3.1.14.9	X			
9.5.3.1.14.10	X			
9.5.3.2	X			
9.6	X			
9.6.1	X			
9.6.2	X			
9.6.2.1	X			
9.6.2.2	X			
9.6.2.3	X			
9.6.2.3.1	X			
9.6.2.3.2	X			
9.6.2.4	X			
9.6.2.4.1	X			
9.6.2.4.2	X			
9.6.2.4.3	X			
9.6.2.4.3.1	X			
9.6.2.4.3.2	X			
9.6.2.4.4	X			
9.6.2.4.4.1	X			

Paragraph No	All	Orbital	Launch/ReEntry	Planetary
9.6.2.4.4.2	X			
9.6.2.5	X			
9.6.2.5.1	X			
9.6.2.5.2	X			
9.6.2.6	X			
9.6.2.6.1	X			
9.6.2.6.2	X			
9.6.2.7	X			
9.6.2.7.1	X			
9.6.2.7.2	X			
9.6.2.8	X			
9.6.2.8.1	X			
9.6.2.8.2	X			
9.6.2.9	X			
9.6.2.9.1	X			
9.6.2.9.2	X			
9.6.3	X			
9.6.3.1	X			
9.6.3.1.1	X			
9.6.3.1.2.	X			
9.6.3.1.3	X			
9.6.3.1.3.1	X			
9.6.3.1.3.2	X			
9.6.3.1.4	X			
9.6.3.1.5	X			
9.6.3.1.6	X			
9.6.3.1.6.1	X			
9.6.3.1.6.2	X			
9.6.3.1.6.3	X			
9.6.3.1.6.3.1	X			
9.6.3.1.6.3.2	X			
9.6.3.1.6.4	X			
9.6.3.1.6.4.1	X			
9.6.3.1.6.4.2	X			
9.6.3.1.7	X			
9.6.3.1.7.1	X			
9.6.3.1.7.2	X			
9.6.3.1.7.3	X			
9.6.3.1.7.3.1	X			
9.6.3.1.7.3.2	X			
9.6.3.1.7.4	X			
9.6.3.1.7.5	X			
9.6.3.1.7.5.1	X			

Paragraph No	All	Orbital	Launch/ReEntry	Planetary
9.6.3.1.7.5.2	X			
9.6.3.1.8	X			
9.6.3.1.8.1	X			
9.6.3.1.8.2	X			
9.6.3.2.8.3	X			
9.6.3.1.9	X			
9.6.3.1.9.1	X			
9.6.3.1.9.2	X			
9.6.3.1.10	X			
9.6.3.1.10.1	X			
9.6.3.1.10.2	X			
9.6.3.2	X			
9.6.3.2.1	X			
9.6.3.2.1.1	X			
9.6.3.2.1.2	X			
9.6.3.2.2	X			
9.6.3.2.3	X			
9.6.3.2.4	X			
9.6.3.2.5	X			
9.6.3.2.5.1	X			
9.6.3.2.5.2	X			
9.6.3.3	X			
9.6.3.3.1	X			
9.6.3.3.1.1	X			
9.6.3.3.1.2	X			
9.6.3.3.1.3	X			
9.6.3.3.2	X			
9.6.3.3.2.1	X			
9.6.3.3.2.2	X			
10.0	X			
10.1	X			
10.2	X			
10.2.1	X			
10.2.2	X			
10.2.3	X			
10.2.3.1	X			
10.2.3.2	X			
10.2.3.3	X			
10.2.3.4	X			
10.2.3.5	X			
10.3	X			
10.3.1	X			
10.3.2	X			

Paragraph No	All	Orbital	Launch/ReEntry	Planetary
10.3.3	X			
10.3.3.1	X			
10.3.3.2	X			
10.3.4		X		
10.4	X			
10.4.1	X			
10.4.2		X		
10.4.3	X			
10.5	X			
10.5.1	X			
10.5.2	X			
10.5.3	X			
10.5.3.1	X			
10.5.3.2	X			
10.5.3.3	X			
10.5.3.4	X			
10.6	X			
10.6.1	X			
10.6.2	X			
10.6.3	X			
10.6.4		X		
10.7	X			
10.7.1	X			
10.7.2	X			
10.7.3	X			
10.8		X		
10.8.1		X		
10.8.2		X		
10.8.3		X		
10.8.3.1		X		
10.8. 3.1.1		X		
10.8.3.1.2		X		
10.8.3.1.2.1		X		
10.8.3.1.2.2		X		
10.8.3.2		X		
10.8.3.2.1		X		
10.8.3.2.1.1		X		
10.8.3.2.1.2		X		
10.8.3.2.1.3		X		
10.8.3.3		X		
10.8.3.4		X		
10.8.3.5		X		
10.8.4		X		

Paragraph No	All	Orbital	Launch/ReEntry	Planetary
10.9	X			
10.9.1	X			
10.9.2	X			
10.9.2.1	X			
10.9.2.2	X			
10.9.2.3	X			
10.9.3	X			
10.9.3.1	X			
10.9.3.2	X			
10.9.3.2.1	X			
10.9.3.2.2	X			
10.9.3.2.3	X			
10.9.3.2.4	X			
10.9.3.2.5	X			
10.9.3.2.6	X			
10.9.3.2.7	X			
10.9.3.2.8	X			
10.9.3.2.9	X			
10.9.3.2.10	X			
10.9.3.2.11	X			
10.9.3.2.12	X			
10.9.3.2.13	X			
10.9.3.2.14	X			
10.9.3.2.15	X			
10.9.3.2.15.1	X			
10.9.3.2.15.2	X			
10.9.3.2.16	X			
10.10	X			
10.10.1	X			
10.10.2	X			
10.10.3	X			
10.11	X			
10.11.1	X			
10.11.2	X			
10.11.3	X			
10.12	X			
10.12.1	X			
10.12.2	X			
10.12.3	X			
11.0	X			
11.1	X			
11.2	X			
11.2.1	X			

Paragraph No	All	Orbital	Launch/ReEntry	Planetary
11.2.2	X			
11.2.2.1	X			
11.2.2.2	X			
11.2.3	X			
11.2.3.1	X			
11.2.3.1.1	X			
11.2.3.1.2	X			
11.2.3.1.3	X			
11.2.3.2	X			
11.2.3.3	X			
11.2.3.4	X			
11.2.3.5	X			
11.2.3.6	X			
11.2.3.7	X			
11.2.4	X			
11.2.4.1	X			
11.2.4.2	X			
11.3	X			
11.3.1	X			
11.3.2	X			
11.3.3	X			
11.3.3.1	X			
11.3.3.2	X			
11.3.3.3	X			
11.3.3.4	X			
11.4	X			
11.4.1	X			
11.4.2	X			
11.4.3	X			
11.4.4	X			
11.5	X			
11.5.1	X			
11.5.2	X			
11.5.3.1	X			
11.5.3.2	X			
11.5.4	X			
11.6	X			
11.6.1	X			
11.6.2	X			
11.6.3	X			
11.6.3.1	X			
11.6.3.2	X			
11.6.3.3	X			

Paragraph No	All	Orbital	Launch/ReEntry	Planetary
11.6.3.4	X			
11.7	X			
11.7.1	X			
11.7.2	X			
11.7.2.1	X			
11.7.2.2	X			
11.7.2.3	X			
11.7.2.3.1	X			
11.7.2.3.2	X			
11.7.2.3.2.1	X			
11.7.2.3.2.2	X			
11.7.2.3.2.3	X			
11.7.2.3.2.4	X			
11.7.2.3.3	X			
11.7.2.3.3.1	X			
11.7.2.3.3.2		X		
11.7.2.3.3.3	X			
11.7.2.3.3.4	X			
11.7.2.3.4		X		X
11.7.2.4		X		
11.7.3	X			
11.7.3.1	X			
11.7.3.2	X			
11.7.3.3	X			
11.7.3.4		X		
11.8	X			
11.8.1	X			
11.8.2	X			
11.8.2.1	X			
11.8.2.2	X			
11.8.2.2.1	X			
11.8.2.2.2	X			
11.8.2.2.3	X			
11.8.2.2.4	X			
11.8.2.2.5	X			
11.8.2.2.6	X			
11.8.3	X			
11.8.3.1	X			
11.8.3.2	X			
11.8.3.3		X		
11.9	X			
11.9.1	X			
11.9.2	X			

Paragraph No	All	Orbital	Launch/ReEntry	Planetary
11.9.3	X			
11.9.3.1	X			
11.9.3.2	X			
11.9.3.3	X			
11.9.3.4	X			
11.9.4	X			
11.10	X			
11.10.1	X			
11.10.2	X			
11.10.3	X			
11.10.3.1	X			
11.10.3.2	X			
11.10.3.3	X			
11.10.3.4	X			
11.10.3.5	X			
11.10.3.6	X			
11.10.4	X			
11.11	X			
11.11.1	X			
11.11.2	X			
11.11.2.1	X			
11.11.2.2	X			
11.11.2.3	X			
11.11.2.4	X			
11.11.3	X			
11.11.3.1	X			
11.11.3.1.1	X			
11.11.3.1.2	X			
11.11.3.1.3	X			
11.11.3.1.4	X			
11.11.3.1.5	X			
11.11.3.1.6	X			
11.11.3.1.7	X			
11.11.3.1.8	X			
11.11.3.1.9	X			
11.11.3.2	X			
11.11.3.2.1	X			
11.11.3.2.1.1	X			
11.11.3.2.2	X			
11.11.3.2.3	X			
11.11.3.2.4	X			
11.11.3.3	X			
11.11.3.4	X			

Paragraph No	All	Orbital	Launch/ReEntry	Planetary
11.11.3.5	X			
11.11.3.6	X			
11.11.4	X			
11.12	X			
11.12.1	X			
11.12.2	X			
11.12.3	X			
11.13	X			
11.13.1	X			
11.13.1.1	X			
11.13.1.2	X			
11.13.1.2.1	X			
11.13.1.2.2	X			
11.13.1.2.3	X			
11.13.1.3	X			
11.13.1.3.1	X			
11.13.1.3.2	X			
11.13.1.4	X			
11.13.2	X			
11.13.2.1	X			
11.13.2.2	X			
11.13.2.3	X			
121.13.2.4	X			
11.14	X			
11.14.1	X			
11.14.2	X			
11.14.3	X			
11.14.4	X			
12.0	X			
12.1	X			
12.2	X			
12.3	X			
12.3.1	X			
12.3.1.1	X			
12.3.1.2	X			
12.3.1.3	X			
12.3.1.4	X			
12.3.2	X			
12.3.2.1	X			
12.3.2.2	X			
12.3.3	X			
13.0	X			
13.1	X			

Paragraph No	All	Orbital	Launch/ReEntry	Planetary
13.2	X			
13.2.1	X			
13.2.2	X			
13.2.3	X			
13.2.3.1	X			
13.2.3.2	X			
13.2.3.3	X			
13.2.3.4	X			
13.2.4	X			
13.3	X			
13.3.1	X			
13.3.2	X			
13.3.3	X			
13.3.3.1	X			
13.3.3.2	X			
13.4	X			
13.4.1	X			
13.4.2	X			
13.4.3	X			
13.4.3.1	X			
13.4.3.2	X			
13.4.3.3	X			
13.4.4	X			
14.0	X			
14.1	X			
14.1.1	X			
14.1.2	X			
14.1.2.1	X			
14.1.2.1.1	X			
14.1.2.1.2	X			
14.1.2.1.3	X			
14.1.2.1.4	X			
14.1.3	X			
14.1.4	X			
14.2	X			
14.2.1	X			
14.2.2	X			
14.2.2.1	X			
14.2.2.2	X			
14.2.2.3	X			
14.2.2.4	X			
14.2.2.5	X			
14.2.2.6	X			

Paragraph No	All	Orbital	Launch/ReEntry	Planetary
14.2 2.7	X			
14.2.2.8	X			
14.2.2.9	X			
14.2.3	X			
14.2.3.1	X			
14.2.3.2	X			
14.2.3.3	X			
14.2.3.4	X			
14.2.3.5	X			
14.2.3.6	X			
14.2.3.7	X			
14.2.3.8	X			
14.2.3.9	X			
14.2.4		X		X
14.2.4.1		X		X
14.2.4.2		X		X
14.2.4.3	X			
14.2.4.4	X			
14.2.4.5	X			
14.3.1	X			
14.3.2	X			
14.3.2.1	X			
14.3.2.1.1	X			
14.3.2.1.2	X			
14.3.2.1.3	X			
14.3.2.2	X			
14.3.2.3	X			
14.3.2.4	X			
14.3.2.5	X			
14.3.2.6	X			
14.3.2.7	X			
14.3.3	X			
14.3.4	X			
14.3.4.1	X			
14.3.4.2	X			
14.3.4.3	X			
14.3.4.4	X			
14.3.4.5	X			
14.4.1	X			
14.4.2	X			
14.4.2.1	X			
14.4.2.2	X			
14.4.2.3	X			

Paragraph No	All	Orbital	Launch/ReEntry	Planetary
14.4.2.4	X			
14.4.2.5	X			
14.4.3	X			
14.4.3.1	X			
14.4.3.2	X			
14.4.3.3	X			
14.4.3.4	X			
14.4.3.5	X			
14.4.4	X			
14.4.4.1	X			
14.4.4.2		X		X
14.4.4.3		X		X
14.5.1	X			
14.5.2	X			
14.5.2.1	X			
14.5.2.2	X			
14.5.2.3	X			
14.5.2.4	X			
14.5.2.5	X			
14.5.2.6	X			
14.5.3.1	X			
14.5.3.2	X			
14.5.3.3	X			
14.5.3.4	X			
14.5.3.5	X			
14.5.3.6	X			
14.6.1	X			
14.6.2.1	X			
14.6.2.2	X			
14.6.2.3	X			
14.6.2.4	X			
14.6.2.4.1	X			
14.6.2.4.2	X			
14.6.3.1	X			
14.6.3.2	X			
14..6.3.3	X			
14.6.4.1	X			
14.6.4.2	X			
14.6.4.3	X			
14.7.1	X			
14.7.2	X			
14.7.3	X			
14.7.4	X			

Paragraph No	All	Orbital	Launch/ReEntry	Planetary
14.7.4.1	X			
14.7.4.2		X		
14.7.4.3		X		

APPENDIX H

VIDEOTAPE USER'S GUIDE

What is this videotape and why is it useful?

A videotape entitled, "Living and Working in Space," has been prepared by the ex-Skylab astronauts, Bill Pogue and Jerry Carr, for the Boeing Aerospace Company. This videotape incorporates scenes from Gemini, Apollo, Skylab, and Shuttle. It is intended to provide a wide scope general introduction to microgravity human factors/human engineering issues.

This videotape is specifically designed to create awareness of the basic microgravity considerations for workers involved in planning, engineering, and design work who are new to space programs. The content is biased towards the specific requirements of the Space Station and other long-duration space flights.

How is this videotape to be used?

The 34 minute videotape has been divided into 37 scenes. An on-screen clock serves as a counter for locating these scenes. There are 2 sub-appendices that are to be used for locating MSIS informaiton on this videotape:

Appendix H1-Video Scenes Description

This sub-appendix lists the 37 video scenes in time sequence. A short description for each scene is provided. A listing of the MSIS paragraphs that pertain to each scene is provided.

Appendix H2-Video Scenes Pertaining to MSIS Paragraphs

This sub-appendix lists MSIS paragraphs and then provides the scene numbers where information pertinent to each paragraph will be found.

How do you obtain a copy of the videotape?

A copy of the videotape can be obtained from the following source:

MSIS Custodian/SP3
NASA - Johnson Space Center
Houston, TX 77058

APPENDIX H1

VIDEO SCENES DESCRIPTION

APPENDIX H1
VIDEOTAPE USER'S GUIDE
SCENE DESCRIPTIONS

APPENDIX H1

Living and Working in Space Video Scenes Descriptions		
Scene Description	**Time**	**MSIS Paragraphs***
1. Skylab in orbit	0:00-0:41	5.1, 5.2
2. Shuttle Orbiter in orbit	0:41-1:01	5.1, 5.2
3. Crew on Orbiter flight deck	1:01-1:23	3.3.4, 5.2, 8.4, 8.6, 8.12, 8.13, 9.2.4.2, 10.6
4. Graphic: space neutral posture	1:23-2:24	3.3.4, 5.2, 8.6, 9.2.4.2, 10.2.3.2, 10.4, 10.8.3.4, 10.9, 11.6, 11.7, 11.8, 12.3.1.2, 12.3.1.3
5. Crewman at Skylab wardroom window	2:24-2:33	3.3.4, 5.2, 8.11, 9.2.5.1.2, 11.7, 11.11
6. Spacelab crewmember holds arms	2:33-2:50	3.3.4, 4.6, 5.2, 8.6, 8.9.3.1, 8.9.3.2, 9.2.4.2, 11.6, 11.7
7. Skylab crewmember on exercise ergometer	2:50-3:13	3.3.4, 5.2, 7.2.3.3, 8.9.3.2, 10.8.3.4, 11.7
8. Skylab crewmen don suits	3:13-3:46	3.3.2, 3.3.3, 4.8, 5.2, 8.6, 11.7.2, 11.7.3, 11.9, 14.4.3.4
9. Space motion sickness experiments: crew participation	3:46-4:52	4.5, 5.2, 7.2.3, 11.7
10. Fluid shift: graphics & discussion	4:52-5:45	5.2, 7.2.3, 7.2.7
11. Sequence showing body rotations and rapid translations	5:45-6:44	3.3, 4.0, 5.2, 6.3, 8.2, 8.6, 8.7, 8.8, 8.9, 11.6, 11.7, 11.8
12. Contingency maintenance: poor restraint & bad lighting	6:44-7:51	3.3, 4.2, 4.8, 5.2, 6.3, 8.2, 8.4, 8.6, 8.9, 8.13, 9.2.2, 11.6, 11.8, 11.9, 12.3
13. Earth scene & scene showing docking-discussion of vision	7:51-8:34	4.2, 5.1, 10.7
14. Crewmember translates through Skylab-discussion of sense of orientation	8:34-9:04	4.2, 4.5, 4.6, 5.2, 6.3, 8.2, 8.3, 8.4, 8.6, 8.7, 8.8, 8.9, 8.10, 8.12, 8.13, 9.2.2, 9.2.4, 11.6, 11.7, 11.8
15. Wardroom table & eating scenes from Skylab; group meal on shuttle	9:04-11:51	3.3, 4.8, 5.2, 8.2, 8.6, 8.9.3, 8.12, 8.13, 10.5.3, 10.6, 11.7
16. Skylab & Orbiter sleep stations	11:51-13:02	3.3, 4.6, 4.10, 5.2, 7.2.4, 8.4, 8.6, 11.7
17. Exercise: scenes from Skylab & Shuttle showing different types of exercise	13:02-14:04	3.3, 4.6, 4.8, 4.9, 4.10, 5.2, 7.2.3.3, 7.2.7, 8.4, 8.6, 8.9.3, 10.7, 10.8, 11.7
18. Body cleansing scenes from Skylab & Shuttle	14:04-14:44	7.2.5, 8.6, 10.2.3, 11.3, 11.7

* Refer to Appendix H2 for listing of MSIS paragraphs cross matrixed to video scenes

APPENDIX H1
VIDEOTAPE USER'S GUIDE
SCENE DESCRIPTIONS

APPENDIX H1 (CONTINUED)

Living and Working in Space
Video Scenes Descriptions

Scene Description	Time	MSIS Paragraphs*
19. Space housekeeping: debris accumulation on filters/screens, vacuuming operations on Skylab & Shuttle, and housekeeping requirements, trash disposal and inventory management	14:44-16:02	5.2, 8.3, 8.6, 8.7, 8.8, 8.9, 8.10, 9.2.5.2, 10.11, 11.4, 11.6, 11.7, 12.3, 13.2, 13.3
20. Medical monitoring: Shuttle	16:02-16:20	7.2.7, 10.9
21. Body restraint illustrations: arresting/controlling body motion, handling equipment, use of tools and tool restraint during tasks	16:20-18:25	3.3, 5.2, 6.4, 8.7, 8.8, 8.9, 11.2, 11.6, 11.7, 11.8, 11.10, 12.3
22. Paper/hard copy/document management, document restraint	18:25-19:14	4.8, 5.2, 8.6, 8.9.2.2, 11.7.3, 13.4.3.2
23. Manual dexterity during task performance: tool restraint during tasks	19:14-19:44	3.3.2, 4.8, 8.6, 8.9.3, 9.2.2.2, 9.2.4.2, 11.2, 11.7, 12.3
24. Work bench innovations on Skylab: fan housing and filter screen	19:44-20:12	5.2, 8.4, 8.6, 9.2.2, 11.7, 12.3
25. Difficulty in handling small items	20:12-20:36	3.3.2, 3.3.3, 4.8, 5.2, 8.9, 9.2.2, 11.7, 11.13, 12.3
26. Work station/work area architecture and panel orientation considerations	20:36-21:23	4.2, 4.5, 5.2, 8.2, 8.3, 8.4, 8.6, 8.12, 9.2.2, 9.2.3, 12.3.1.3
27. Windows as work stations: crowding & interference issues	21:23-21:49	3.3, 5.2, 8.6, 8.11, 9.2.2, 11.7, 11.11, 11.14
28. Manipulation of hardware in microgravity and difficulty created by poorly restrained documents. Difficulty in freeing stuck mechanisms	21:49-23:01	3.3, 4.2, 4.8, 4.9, 4.10, 5.2, 6.3, 8.6, 9.2.2, 11.7, 12.3, 13.4.3
29. Cable & hose management: clutter, snag & interference potential	23:01-23:28	5.2, 6.3, 8.2, 8.7, 8.8, 11.14, 12.3
30. Body translation-equipment vulnerability/inadvertent control actuation or damage potential during crew translation	23:28-26:30	3.3, 4.8, 5.2, 6.3, 8.2, 8.6, 8.7, 8.8, 8.9, 9.2.2, 11.6, 11.7, 11.8

* Refer to Appendix H2 for listing of MSIS paragrapns cross matrixed to video scenes

APPENDIX H1
VIDEOTAPE USER'S GUIDE
SCENE DESCRIPTIONS

APPENDIX H1 (CONTINUED)

Living and Working in Space Video Scenes Descriptions		
Scene Description	**Time**	**MSIS Paragraphs***
31. Equipment translation illustrations, body restraint during equipment handling	26:30-26:56	3.3, 4.8, 5.2, 8.6, 8.7, 8.8, 8.9, 11.7, 11.8
32. Introduction to EVA-suited restrictions to dexterity/mobility and body/equipment restraints and mobility aids	26:56-27:27	14.1, 14.2, 14.3, 14.4, 14.5
33. Body and equipment restraints: EVA considerations and provisions Gemini to Shuttle	27:27-29:28	14.4
34. Equipment manipulation and translation - EVA	29:28-30:53	14.4, 14.5, 14.7
35. Manned maneuvering unit OPS: satellite retrieval operations	30:53-31:42	14.5, 14.7
36. EVA lighting consideration, vehicle external lighting considerations/ requirements	31:42-32:48	14.4
37. Summary Posture, restraints, access, single reference frame	32:48-33:40	

* Refer to Appendix H2 for listing of MSIS paragraphs cross matrixed to video scenes

APPENDIX H2

VIDEO SCENES PERTAINING TO MSIS PARAGRAPHS

APPENDIX H2
VIDEOTAPE USER'S GUIDE
MSIS PARAGRAPHS
VS. SCENES

APPENDIX H2

	Living and Working in Space Video Scenes Pertaining to MSIS Paragraphs*
3.3	**Anthropometrics and Biomechanics**
3.3.1	11, 12, 15, 16, 17, 21, 27, 28, 30, 31
3.3.2	8, 11, 12, 15, 16, 17, 21, 23, 25, 27, 28, 30, 31
3.3.3	8, 11, 12, 15, 16, 17, 21, 27, 28, 30, 31
3.3.4	3, 4, 5, 6, 7, 11, 12, 15, 16, 17, 21, 27, 28, 30, 31
4.0	**Human Performance Capabilities**
4.2	12, 13, 14, 26, 28
4.3	13
4.5	9, 13, 14, 26
4.6	13; 14, 16, 17
4.8	8, 13, 15, 17, 22, 23, 25, 28, 30, 31
4.9	13, 17, 28
4.10	13, 16, 17, 28
5.0	**Natural and Induced Environments**
5.1	1, 2, 18
5.2	Virtually all scenes
6.0	**Crew Safety**
6.3	11, 12, 14, 28, 29, 30
6.4	21
7.0	**Health Maintenance**
7.2.3	7, 9, 10, 17
7.2.4	16
7.2.5	18
7.2.7	10, 17, 20

* Refer to Appendix H1 for listing of video scenes and their description

APPENDIX H2
VIDEOTAPE USER'S GUIDE
MSIS PARAGRAPHS
VS. SCENES

APPENDIX H2 (CONTINUED)

Living and Working in Space
Video Scenes Pertaining to MSIS Paragraphs*

8.0	**Architecture**	
8.2		11, 12, 14, 26, 29, 30
8.3		14, 19, 26
8.4		3, 12, 14, 16, 17, 24, 26
8.6		3, 4, 6, 8, 11, 12, 14, 17, 18, 19, 22, 23, 24, 26, 27, 28, 30, 31
8.7		11, 14, 19, 21, 29, 30, 31
8.8		11, 14, 19, 21, 29, 30, 31
8.9		7, 7, 11, 12, 14, 17, 19, 21, 22, 23, 25, 30
8.10		14, 19
8.11		5, 27
8.12		3, 14, 26
8.13		3, 12, 14
9.0	**Work Stations**	
9.2.2		12, 14, 22, 24, 25, 26, 27, 28, 30
9.2.3		26
9.2.4		4, 6, 14, 23
9.2.5.1		5
9.2.5.2		19
10.0	**Personal Hygiene**	
10.2.3.1		18
10.2.3.2		4, 18
10.4		4
10.5		15
10.6		3, 15
10.7		17
10.8		4, 7, 17
10.9		4, 20
10.11		19

* Refer to Appendix H1 for listing of video scenes and their description

APPENDIX H2
VIDEOTAPE USER'S GUIDE
MSIS PARAGRAPHS
VS. SCENES

APPENDIX H2 (CONTINUED)

Living and Working in Space
Video Scenes Pertaining to MSIS Paragraphs*

11.0	**Hardware & Equipment**
11.2	21, 23
11.3	18
11.4	19
11.5	None
11.6	4, 5, 6, 11, 12, 14, 19, 21, 30
11.7	4, 5, 6, 7, 8, 9, 11, 14, 15, 16, 17, 18, 19, 21, 22, 23, 24, 25, 27, 28, 30, 31
11.8	4, 5, 11, 12, 14, 21, 30, 31
11.9	8, 12
11.10	21
11.11	6, 27
11.13	25
11.14	27, 29
12.0	**Design for Maintainability**
12.3	4, 12, 19, 21, 23, 24, 25, 26, 28, 29
13.0	**Facilities Management**
13.[illegible]	19
13.3	19
13.4	22, 28
14.0	**EVA**
14.1	32
14.2	32
14.3	32, 33
14.4	8, 32, 34, 36
14.5	32, 34, 35
14.6	None
14.7	34, 35

* Refer to Appendix H1 for listing of video scenes and their description

APPENDIX I

STANDARDS DATA MANAGEMENT SYSTEM (SDMS)

USER'S GUIDE

(This appendix has been deleted from this volume)

APPENDIX J

MSIS KEYWORD LIST

1-g conditioning

7.2.3.2	Reduced Gravity Countermeasures Design Considerations

Abbreviations

9.5.3.1.14.3	Upper/Lower Case Design Requirements
9.6.2.8.2	Design Requirements for Format
9.6.4.3	Design Requirements for Data Entry Design

Acceleration

3.3.3.2.1	Gravity Condition Design Considerations
3.3.3.3.2	Strike Reach Envelope Data Design Requirements
4.2.2	Vision - Design Considerations
4.6.2	Kinesthetic Design Considerations
5.3	Acceleration
10.4.3	Individual Crew Quarters Design Requirements
11.7.2.3.3.2	Body Restraint Loads Design Requirements

Acceleration effects

5.3.2.2.2	Subjective Effects of Linear Accelerations

Acceleration environment

5.3.2	Acceleration Design Considerations

Acceleration limits

5.5.3.2.2	Decreased Proficiency Boundary

Acceleration regime

1.4.3.3	Acceleration Regimes - Applicability
5.2.3	Microgravity Design Requirements

Acceleration responses

5.3.2.2 Human Responses to Linear Acceleration

Access air filters

13.2.3.4 Air Filter Design Requirements

Access covers

11.4.3 Closures and Covers Design Requirements

Accessories

8.12.2.2 Decorative Technique Design Considerations

Accidental actuation

9.3.3.2 Accidental Actuation Design Requirements

Accidents

6.2.2.2 Crew Induced Accidents

Acclimatization

5.8.2.2 Human Responses to Thermal Environments - Design Consideration

Acoustic design

5.4.3.1 General Acoustic Design Requirements

Acoustic environment

5.4.2.1 Acoustic Environments - Design Considerations

Acoustic noises

5.4.2 Acoustics Design Considerations

Acoustics

5.4 Acoustics
10.6.3 Meeting Facility Design Requirements

Acronyms

9.6.2.8 Design Requirements for Format
9.6.4.3 Design Requirements for Data Entry Design

Action controls

9.5.3.1.13 Caution and Warning Labels Design Requirements

Activities

8.3.3.1 Adjacent Crew Station Design Requirements

Activity centers

10.0 Activity Centers

Activity grouping

9.6.2.4.2 Design Requirements for Tables

Activity interference

8.3.3.2 Non-Adjacent Crew Stations - Design Requirements
8.7.3.3 Noninterference with Other Activities Design Requirements

Activity schedule

4.5.2.1 Spatial Disorientation

Acute irradiation effects

5.7.2.1.3.3.1 Whole-Body Irradiation Effects

Acute radiation dose

5.7.2.1.3.3 Acute Effects of Ionizing Radiation

Adaptation

4.8.2 Motor Skills (Coordination) - Design Considerations

Adaptive response

5.1.2.2.1 Adaptive Physiological Responses Design Considerations
5.1.2.2.1.1 Hypoxia Design Considerations

Adhesives

11.7.3.2 Equipment Restraint Design Considerations

Adjacent workstation separation

8.4.3 Orientation Design Requirements

Adjustable illumination

8.13.3.6 Workstation Illumination Design Requirements

Adjustable restraints

11.7.3.3 Equipment Restraint Design Requirements

Adjustment controls

12.3.2.1 Fault Detection and Isolation Design Requirements

Advisory displays

9.4.4.3.3 Visual Caution and Warning Display Design Requirements

Aerobic equipment

10.8.3.1.1 Exercise Equipment
10.8.4 *Example Microgravity Countermeasures Design Solution*

Aerodynamic noise

5.4.2.1.1 Launch Phase Acoustic Environment

Aesthetic response

8.12.3.1 Aesthetic and Psychological Requirements

Air filters

13.2.3.4 Air Filter Design Requirements

Air sampler

5.1.3.4 Atmosphere Microbiological Monitoring & Control Design Requirements

Airborne noise

5.4.2.2	Propagation of Noise - Design Considerations

Airborne noise reduction

5.4.4.2	Control of Noise Path Transmission

Airflow

5.8.2.2.5	Special Ventilation & Metabolic Heat Removal Design Considerations

Alarm annunciation

9.4.4.3.1.1	Emergency Display Design Requirements
9.4.4.3.1.2	Warning Signal Design Requirements
9.4.4.3.1.3	Caution Display Design Requirements

Alarm classification

9.4.4.3.1	Alarm Classification Design Requirements

Alarms

9.4.4.2	Caution and Warning System Design Considerations
9.4.4.3.2	General Caution and Warning System Design Requirements
12.3.2.1	Fault Detection and Isolation Design Requirements

Alerting displays

9.4.4.3.3	Visual Caution and Warning Display Design Requirements

Alerting signal

9.4.4.3.4.3	Verbal Alarm Signal Design Requirements

Aligning pins

11.10.3.5	Connector Identification/Alignment Design Requirements

Alignment devices

11.5.3.2	Alignment Devices Design Requirements

Alignment marks

9.5.3.1.5	Alignment Marks/Interface Identification Design Requirements
11.5.3.2	Alignment Devices Design Requirements
11.5.4	Example Mounting Hardware Design Solutions
11.10.3.5	Connector Identification/Alignment Design Requirements
11.10.4	Example Connector Design Solutions

Alphanumeric coding

8.5.3.1	Alphanumeric Coding Design Requirements

Alphanumerics

9.3.3.4.1.1	Layout
9.5.3.1.14	Alphanumeric Design Requirements
9.6.2.8	Design Requirements for Format

Alternative command inputs

9.6.3.1.3.2	Design Requirements for Command Language

Altitude exposure

5.1.2.2.1.7.1	Evolved Gas Dysbarism Design Considerations

Ambient illumination

9.4.2.3.1.2	Display Contrast Design Requirements

Ambient light

8.13.3.5	Medical Lighting Requirements
8.13.2.4	Light Distribution Design Considerations
8.13.2.7	Psychological Factors Design Considerations

Ampersands

9.5.3.1.14.2	Punctuation Design Requirements

Analog-to-digital

9.4.2.3.3.7	Digital Display Design Requirements

Analyzers

5.1.2.3.1	Atmosphere Toxicological Monitoring Design Considerations

Anatomy

10.3.3.1 Defecation and Urination Facilities Design Requirements

Ancillary equipment

11.13.2.2 Personal Ancillary Equipment Design Considerations

11.13.2.4 Example Personal Ancillary Equipment Design Solutions

Ancillary hardware

10.5.3.3 Food Packaging and Stowage Design Requirements

Angle of incidence

8.13.3.2.2 Reflected Glare Design Requirements

Annoyance effects of noise

5.4.2.3.3 Annoyance Effects of Noise

Annunciation

9.4.5.1.2 Tutorial Display and Annunciation Requirements

Antennas

14.2.4.4 EVA Radiation Dosage Example Design Solutions

Anthropometric landmarks

3.1.2 Terminology

Anthropometrics

3.1.2 Terminology
3.2 General Anthropometrics and Biomechanics Related Design Considerations
9.2.4.2.1 Workstation Anthropometric Design Requirements

Anti-reflection

9.4.2.3.1.3 Reflections Design Requirements

Antireflection coatings

11.11.3.1.2 Surface Reflections

Apertures

5.7.3.1.4 Non-Ionizing Radiation Protection Design Considerations

Architectural integration

8.9 Mobility Aids and Restraints Architectural Integration

Architecture

8.0 Architecture
8.2 Overall Architectural Considerations and Requirements
8.2.3 Overall Architectural Design Requirements

Area windows

11.11.3.1.1 Window Size

Arm elevation

3.3.4.2 Neutral Body Posture Design Considerations

Arm float

11.7.2.3.4 Sleep Restraints Design Requirements

Articulation index

5.4.2.4.2.2 Indirect Voice Communications Criteria Considerations
5.4.3.2.2.2 Indirect Voice Communications Noise Exposure Requirements

Atmosphere

5.1 Atmosphere

Atmospheric composition

5.1.2.1 Safe Atmospheres - Design Considerations
5.1.2.1.1 Gas Composition and Pressure Design Considerations
5.1.2.1.2 Gas Pressure Design Considerations
5.1.2.1.4 Human Response to the Diluent Gas Environment Design Considerations
5.1.2.1.4.1 Metabolic Factors Design Considerations
5.1.2.1.4.2 Thermal Factors Design Considerations
5.1.2.2.1.4 Chronic CO_2 Toxicity Design Considerations
5.1.2.2.1.5 Acute CO_2 Toxicity Design Considerations
5.1.2.2.1.7 Dysbarism Sickness Design Considerations
5.1.3.1 Atmosphere Composition and Pressure Design Requirements

Atmospheric contamination

5.1.2.3.2	Atmosphere Microbiological Monitoring Design Considerations

Atmospheric control

5.1.3.1	Atmosphere Composition and Pressure Design Requirements

Atmospheric monitoring

5.1.2.3.3	Baro-Thermal Monitoring Design Considerations
5.1.3.2	Atmosphere Monitoring Design Requirements
5.1.3.4	Atmosphere Microbiological Monitoring & Control Design Considerations
7.2.7.3.3	Environmental Monitoring Design Requirements

Atmospheric parameters

5.8.3.1	Temperature, Humidity, and Ventilation Design Requirements

Atmospheric pressure

5.1.2.1	Safe Atmospheres - Design Considerations
5.1.2.1.1	Gas Composition and Pressure Design Considerations
5.1.2.2.1.7.2	Trapped Gas Dysbarism Design Considerations
5.1.3	Long Term Mission Atmosphere Design Requirements
5.1.3.1	Atmosphere Composition and Pressure Design Requirements

Atmospheric revitalization

5.1.3.1	Atmosphere Composition and Pressure Design Requirements

Atmospheric supply

5.1.3.1	Atmosphere Composition and Pressure Design Requirements

Atmospheric composition

5.1.3	Long -Term MissionAtmosphere Design Requirements

Attachable handles

11.6.3.3	Nonfixed Handles Design Requirements

Attachment instructions

11.5.4	Example Mounting Hardware Design Solutions

Audio alarm controls

9.4.4.3.4.2 Audio Alarm Control Design Requirements

Audio alarm frequency

9.4.4.3.4.1 Audio Alarm Characteristics Design Requirements

Audio alarm intensity

9.4.4.3.4.1 Audio Alarm Characteristics Design Requirements

Audio alarm reset

9.4.4.3.4.2 Audio Alarm Control Design Requirements

Audio alarm shut-off switch

9.4.4.3.4.2 Audio Alarm Control Design Requirements

Audio alarm signals

9.4.4.3.4.1 Audio Alarm Characteristics Design Requirements

Audio alarm volume controls

9.4.4.3.4.2 Audio Alarm Control Design Requirements

Audio alerting signals

9.4.4.3.4.1 Audio Alarm Characteristics Design Requirements

Audio caution and warning system display

9.4.4.3.4 Audio Caution and Warning System Display Design Requirements

Audio displays

9.4.3 Audio Displays

Audio input equipment

9.4.3.3.2 Audio Input/Output Equipment Design Requirements

Audio output equipment

9.4.3.3.2 Audio Input/Output Equipment Design Requirements

Audio signal

9.4.3.2 Audio Displays Design Considerations

Audio signal differences

9.4.4.3.4.1 Audio Alarm Characteristics Design Requirements

Audio signal discriminability

9.4.4.3.4.1 Audio Alarm Characteristics Design Requirements

Audio signal masking

9.4.4.3.4.1 Audio Alarm Characteristics Design Requirements

Auditory system

4.3 Auditory System

Authoring tools

9.6.3.2.5.2 Design Requirements for Hypertext

Background noise levels

5.4.3.2.2.1 Direct Voice Communications Noise Exposure Requirements

Backrest angle

3.3.3.3.1 Functional Reach Design Requirements

Backward acceleration

5.3.2.2.2 Subjective Effects of Linear Accelerations

Bacteria sampling

13.2.3.2 Surface Cleaning Design Requirements

Bar code reader

9.2.5.2.1 Maintenance Workstation Design Considerations
9.3.3.4.8 Bar Code Reader Design Requirement

Baro-Thermal monitoring

5.1.2.3.3 Baro-Thermal Monitoring Design Considerations
5.1.3.5 Baro-Thermal Monitoring Design Requirements

Barrier guards

9.3.3.2 Accidental Actuation Design Requirements

Battery packs

11.2.3.7 Special Tool Features Design Requirements

Bedding

10.4.3 Individual Crew Quarters Design Requirements

Bends

5.1.2.2.1.7.1 Evolved Gas Dysbarism Design Considerations

Between pane contamination

11.11.3.4 Physical Protection Design Requirements

Binaural headsets

9.4.3.2 Audio Displays Design Considerations

Biocide

7.2.7.3.2.3 Microbiological Monitoring & Treatment - Design Requirements

Biocide selection

13.2.3.2 Surface Cleaning Design Requirements

Biocides

13.2.2 Housekeeping Design Considerations
13.2.3.2 Surface Cleaning Design Requirements
13.2.4 Example Housekeeping Design Solutions

Biofilm

7.2.7.2.2.2 Microbiological Monitoring Design Considerations
13.2.3.2 Surface Cleaning Design Requirements

Bioinstrumentation

6.4.2.3 Bioinstrumentation
6.4.3.19 Bioinstrumentation System Micro shock protection Requirements

Bioisolation facility

5.1.3.4.3 Cross Contamination Design Requirements

Biomechanics

3.1.2 Terminology
3.2 General Anthropometrics and Biomechanics Related Design Considerations

Biomedical changes

4.10.2 Workload Design Considerations

Blank labels

9.5.3.1.11 Contingency Labels and Marking Devices Design Requirements

Blind operation

11.7.3.3 Equipment Restraint Design Requirements

Blood pressure

10.8.3.2 Countermeasure Monitoring Design Requirements

Body cleansing

7.2.5.3.2 Partial Body Cleansing Design Requirements
7.2.5.3.4 Whole Body Cleansing Design Requirements

Body dimensions

3.1.1 Scope
10.3.2 Body Waste Management Facilities Design Considerations

Body envelope

8.6.2	Envelope Geometry Design Considerations
8.6.2.3	Body Envelope Design Considerations

Body fluids

7.2.3.4.2	Nonexercise Countermeasures Design Considerations

Body grooming

7.2.5.3.1	Body Grooming Design Requirements

Body heat

3.3.5.2	Body Surface Area Design Considerations

Body mass

3.3.7	Body Mass Properties

Body motion envelope

8.6.2.3	Body Envelope Design Considerations

Body orientation

8.8.2	Translation Path Design Considerations

Body part weight

4.7.2	Reaction Time - Design Considerations

Body resonance

5.5.2.3.1	Physiological Effects of Vibration

Body restraint color

11.7.2.3.3.3	Body Restraint Finish and Color Design Requirements

Body restraint dimensions

11.7.2.3.3.4	Body Restraint Dimensional Design Requirements

Body restraint finish

11.7.2.3.3.3 Body Restraint Finish and Color Design Requirements

Body restraint labels

11.7.2.3.3.3 Body Restraint Finish and Color Design Requirements

Body restraint loads

11.7.2.3.3.2 Body Restraint Loads Design Requirements

Body restraints

11.7.2.3.3 Body Restraint Design Requirements
11.7.2.4 Example Personnel Restraint Design Solutions

Body segment volume

3.3.6.3.2 Body Segment Volume Data Design Requirements

Body segments

3.1.2 Terminology
3.3.7.2 Body Mass Properties Design Considerations
3.3.7.3.3.2 Body Segments Moment of Inertia Data Design Requirements

Body size

3.3.1 Body Size

Body strike limits

3.3.3.1 Introduction

Body surface area

3.3.5 Body Surface Area

Body volume

3.3.6 Body Volume

Body waste

10.3.2 Body Waste Management Facilities Design Considerations

Body waste management

10.3 Body Waste Management Facilities

Body weight

3.3.7.2 Body Mass Properties Design Considerations

Bold

9.5.3.2 Coding Design Requirements

Bolts

6.3.3.6 Screws and Bolts Requirements

Boredom

10.8.2 Microgravity Countermeasure Facility Design Considerations
10.8.3.4 Exercise Environment Design Requirements

Bow

11.11.3.1.3 Optical Characteristics

Bracketing

9.2.3.2.9 Control/Display Movement Ratio Design Requirements

Brightness ratio

8.13.3.2.3 Brightness Ratio Design Requirements

Browsing tools

9.6.3.2.5.2 Design Requirements for Hypertext

Bubbles

11.11.3.1.6 Bubbles Seeds
11.11.3.2.1 Material

Bump protectors

11.8.3.2 Equipment Mobility Aid Design Requirements

Bungee cords

11.7.3.4 Example Equipment Restraint Design Solutions

Burrs

6.3.3.9 Burrs Requirements

Cabin atmosphere

5.1.2.1.4.2 Thermal Factors Design Considerations

Cabin pressure

4.3.2.2 Noise Design Considerations
5.1.2 Atmosphere Design Considerations

Cabinets

11.3.2 Drawer and Rack Design Considerations
12.3.1.2 Physical Accessibility Design Requirements

Cable identification

11.14.4 Example Cable Management Design Solutions

Cable location

11.14.3 Cable Management Design Requirements

Cable maintenance

11.14.2 Cable Management Design Considerations

Cable management

11.14 Cable management
11.14.3 Cable Management Design Requirements

Cable marking

11.14.4 Example Cable Management Design Solutions

Cable protection

11.14.3 Cable Management Design Requirements

Cable retention

11.14.3 Cable Management Design Requirements

Cable routing

11.14.3 Cable Management Design Requirements

Cables

11.10.3.2 Electrical Connectors Design Requirements
11.10.3.5 Connector Identification/Alignment Design Requirements
11.14.2 Cable Management Design Considerations
12.3.1.2 Physical Accessibility Design Requirements

Cadmium plated fasteners

11.9.3.4 IVA Fastener Design Requirements

Calcium loss

5.2.2.1 Physiological Effects of Microgravity

Calibration

12.3.2.1 Fault Detection and Isolation Design Requirements

Capture receptacle

11.5.3.1 General Mounting Design Requirements

Carbon dioxide

5.1.2.2.1.4 Chronic CO_2 Toxicity Design Considerations

Carbon dioxide toxicity

5.1.2.2.1.4 Chronic CO_2 Toxicity Design Considerations
5.1.2.2.1.5 Acute CO_2 Toxicity Design Considerations
5.1.2.2.1.6 CO_2 Withdrawal Design Considerations

Carbon dioxide withdrawal

5.1.2.2.1.6 CO_2 Withdrawal Design Considerations

Carbon monoxide

5.1.2.2.1.7.3 Toxic Gaseous Contaminants Design Considerations

Cardiovascular

10.8.3.1 Microgravity Countermeasures Equipment/Supplies Design Requirements

Caution alarm

9.4.4.3.1 Alarm Classification Design Requirements

Caution and warning

6.6.3.3 Warning System Requirements

Caution and warning displays

9.4.4 Caution and Warning Displays

Caution and warning signals

9.4.4.3.2 General Caution and Warning System Design Requirements

Caution and warning system design factors

9.4.4.2 Caution and Warning System Design Considerations

Caution and warning systems

9.4.4.3.2 General Caution and Warning System Design Requirements

Caution marking location

9.5.3.1.13 Caution and Warning Labels Design Requirements

Center of mass

3.3.7.3.2.2 Body Segments Center of Mass Data Design Requirements

Central storage

10.12.2 Stowage Facility Design Considerations

Chamfers

11.11.3.2.1 Material

Character height

9.5.3.1.14.6 Character Height Design Requirements

Character measurement

9.5.3.1.14.9 Character Measurement Design Requirements

Character size

9.4.2.2 Visual Display Design Considerations
9.5.3.1.14.6 Character Height Design Requirements

Character spaces

9.4.2.3.3.9 Visual Display Terminal (VDT) Design Requirements
9.5.3.1.14.10 Spacing Design Requirements
9.6.2.4.4.2 Design Requirements for Functional Area Tables

Character width

9.5.3.1.14.7 Character Width Design Requirements
9.6.2.4.2 Design Requirements for Tables

Characters

9.4.2.3.3.7 Digital Display Design Requirements
9.4.2.3.3.9 Visual Display Terminal (VDT) Design Requirements
9.5.3.1.14.1 Font Style Design Requirements
9.5.3.1.14.6 Character Height Design Requirements
9.5.3.1.14.7 Character Width Design Requirements

Charts

9.6.2.5.1 Design Considerations for Graphics

Chassis

12.3.1.2 Physical Accessibility Design Requirements

Chassis leakage current

6.4.3.18.1 Chassis Leakage Current
6.4.3.18.1.1 Chassis Leakage Current-Nonpatient Equipment
6.4.3.18.1.2 Chassis Leakage Current-Patient Equipment

Checklists

13.3.3.1 General Inventory Control Design Requirements

Chemical contaminant monitoring

7.2.7.3.3 Environmental Monitoring Design Requirements

Chemical contamination

5.1.3.3 Atmosphere Toxicological Monitoring & Control Design Requirements

Chemical radiation protectors

5.7.2.1.4.3 Chemical Protectors

Chilling

10.5.3.2 Food Selection Preparation Consumption-Design Requirements

Chokes

5.1.2.2.1.7.1 Evolved Gas Dysbarism Design Considerations

Circuit breaker dimensions

9.3.3.3.13 Circuit Breaker Design Requirements

Circuit breaker displacement

9.3.3.3.13 Circuit Breaker Design Requirements

Circuit breaker protection

9.3.3.2 Accidental Actuation Design Requirements

Circuit breaker resistance

9.3.3.3.13 Circuit Breaker Design Requirements

Circuit breakers

9.3.3.3.13 Circuit Breaker Design Requirements
12.3.1.2 Physical Accessibility Design Requirements

Circuit tests

9.4.3.3.1 General Design Requirements

Circular scale

9.4.2.3.3.4 Scales and Pointers Design Requirements

Circumference

3.2.3.1 Microgravity Effects Design Considerations

Clamps

11.14.3 Cable Management Design Requirements

Class 1 alarm

9.4.4.3.1.1 Emergency Display Design Requirements

Class 2 alarm

9.4.4.3.1.2 Warning Signal Design Requirements

Class 3 alarm

9.4.4.3.1.3 Caution Display Design Requirements

Cleaning

8.12.3.4 Decor Cleaning and Maintenance
9.2.5.1.2 Window Workstation Design Requirements
10.2.2 Personal Hygiene Design Considerations
10.5.3.4 Galley and Wardroom Cleaning - Design Requirements
10.9.3.1 Medical Communications/Computing Design Requirements

Cleaning chemicals

13.2.3.2 Surface Cleaning Design Requirements

Cleaning implements

13.2.3.2 Surface Cleaning Design Requirements

Cleanser

13.2.4 Example Housekeeping Design Solutions

Cleansing

10.3.3.1	Defecation and Urination Facilities Design Requirements

Cleansing agents

10.2.3.2	Whole Body Cleansing Design Requirements
10.2.3.5	Grooming and Shaving Design Requirements

Cleanup supplies

10.3.4	Example Body Waste Management Facility Design

Clinical laboratory lighting

8.13.3.5	Medical Lighting Requirements

Clips

11.7.3.4	Example Equipment Restraint Design Solutions

Clock

9.4.2.3.3.5	Clock and Timer Design Requirements

Close window

9.6.3.1.7.5.2	Design Requirements for Interactions with Windows

Closures

11.4	Closures and Covers
13.2.3.1	General Housekeeping Design Requirements

Clothing

3.2.2	Application of Anthropometric Data - Design Considerations
3.3.3.2.5	Clothing Design Considerations
5.8.2	Thermal Environment Design Considerations
7.2.5.3.5	Personal Clothing & Equipment Cleansing Design Requirements
10.4.3	Individual Crew Quarters Design Requirements
10.10.2	Laundry Facility Design Considerations
11.13	Crew Personal Equipment
3.3.1.2	Body Size Design Considerations

Clothing comfort

11.13.1.3.1 General Clothing Design Requirements

Clothing considerations

11.13.1.2.1 Preliminary Clothing Design Considerations

Clothing design

11.13.1.2 Clothing Design Considerations
11.13.1.3 Clothing Design Requirements
11.13.1.4 Example Clothing Design Solutions

Clothing doffing

11.13.1.3.1 General Clothing Design Requirements
11.13.1.3.1 General Clothing Design Requirements

Clothing environmental protection

11.13.1.3.1 General Clothing Design Requirements

Clothing esthetics

11.13.1.3.1 General Clothing Design Requirements

Clothing identification

11.13.1.3.2 Clothing Packaging and Storage Design Requirements

Clothing material

11.13.1.3.1 General Clothing Design Requirements

Clothing packaging

11.13.1.3.2 Clothing Packaging and Storage Design Requirements

Clothing quantities

11.13.1.2.3 Frequency of Clothing Change

Clothing selection

11.13.1.3.1 General Clothing Design Requirements

Clothing sizes

11.13.1.3.1 General Clothing Design Requirements

Clothing storage

11.13.1.3.2 Clothing Packaging and Storage Design Requirements

Clothing use rates

11.13.1.2.3 Frequency of Clothing Change

Coarse control

9.2.3.2.9 Control/Display Movement Ratio Design Requirements

Code brightness

9.5.3.2 Coding Design Requirements

Code color

9.5.3.2 Coding Design Requirements

Code location

9.5.3.2 Coding Design Requirements

Code pattern

9.5.3.2 Coding Design Requirements

Code shape

9.5.3.2 Coding Design Requirements

Code size

9.5.3.2 Coding Design Requirements

Coding

9.3.3.3.2 Thumbwheel Control Design Requirements
9.3.3.3.6 Lever Design Requirements
9.5 Labeling and Coding
9.5.3.2 Coding Design Requirements
9.6.2.6 Coding

9.6.3.1.6.2 Design Requirements for Menus
9.6.4.3 Design Requirements for Data Entry Design
10.12.3 Stowage Facility Design Requirements
11.2.3.5 Tool Labeling and Identification Design Requirements
11.5.3.2 Alignment Devices Design Requirements
11.8.2.2.2 Handhold and Handrail Coding Design Requirements
11.10.3.5 Connector Identification/Alignment Design Requirements
11.14.3 Cable Management Design Requirements

Coding applications

9.5.2 Labeling and Coding Design Considerations

Coding use

9.5.2 Labeling and Coding Design Considerations

Cold tolerance times

5.8.2.2.4 Human Performance in Cold - Design Considerations

Coliforms

7.2.7.2.2.2 Microbiological Monitoring Design Considerations

Color

8.6.2.2 Visual Design Considerations
8.12.2.1 General Interior Decor Design Considerations
8.12.2.2 Decorative Technique Design Considerations
8.12.2.3 Psychological Effects Design Considerations
8.12.3.3 Color Selection
8.13.3.3 Light Color Design Requirements
9.2.2.2.4 Workstation Color Design Requirements
9.2.5.1.2 Window Workstation Design Requirements
9.4.2.3.3.9 Visual Display Terminal (VDT) Design Requirements

Color coding

8.5.3.3 Location & Orientation By Color Coding Design Requirements
9.4.2.3.3.4 Scales and Pointers Design Requirements
9.4.2.3.3.8 Light Emitting Diode (LED) Design Requirements
9.5.3.1.5 Alignment Marks/Interface Identification Design Requirements
9.5.3.2 Coding Design Requirements

Color rendition

8.13.3.3 Light Color Design Requirements

Color temperature

8.13.3.3 Light Color Design Requirements

Columns

9.6.2.4.3.2 Design Requirements for Matrix Tables

Combined stressors

5.9.2 Combined Environmental Effects Design Considerations

Comfort

13.2.2 Housekeeping Design Considerations

Command area

9.6.3.1.3.2 Design Requirements for Command Language

Command keystrokes

9.6.3.1.4 Design Requirements for Command Keystrokes

Command language

9.6.3.1.3 Command Language
9.6.3.4.5.1 Design Considerations for Prompts

Command language syntax

9.6.3.1.3.2 Design Requirements for Command Language

Command language terms

9.6.3.1.3.2 Design Requirements for Command Language

Command language use

9.6.3.1.3.2 Design Requirements for Command Language

Command listings

9.6.3.1.10.2 Design Requirements for User-definable Macros

Commands

9.6.2.1 Design Considerations for Data Display
9.6.3.1.3.2 Design Requirements for Command Language
9.6.3.4.2.1 Design Considerations for User Feedback

Common tools

11.2.3.2 Tool Commonality Design Requirements

Communication

4.3.2.2 Noise Design Considerations
9.2.5.2.1 Maintenance Workstation Design Considerations
10.4.3 Individual Crew Quarters Design Requirements
10.6.2 Meeting Facility Design Considerations
10.9.3.2.1 Data Base and Communications Capability

Communication equipment

9.4.3.3.3 Operator Comfort and Convenience Design Requirements

Compartment orientation

8.4 Compartment and Crew Station Orientation

Compression monitoring

5.1.3.3 Atmosphere Toxicological Monitoring & Control Design Requirements

Compression therapy

10.9.3.2.11 Hyperbaric Treatment Facilities

Computer access

9.2.5.2.1 Maintenance Workstation Design Considerations

Computer access device

9.3.3.4.8 Bar Code Reader Design Requirement

Computer failure

9.6.4.2 Design Requirements for User Input

Computer input devices

9.3.2.2 Computer Input Devices - Design Considerations

Conduction

5.8.2.2.1 Modes of Heat Exchange - Design Considerations

Conductors

6.4.3.8 Insulation Requirements

Confirmation

9.6.3.4.2.2 Design Requirements for User Feedback

Confirmation request

9.6.3.4.2.1 Design Considerations for User Feedback

Connector actuation force

14.6.4.3 EVA Connectors Design Requirements

Connector alignment

11.10.3.3 Structural Connectors Design Requirements
14.6.4.3 EVA Connectors Design Requirements

Connector arrangement

11.10.3.6 Connector Arrangement Design Requirements

Connector caps

14.6.4.3 EVA Connectors Design Requirements

Connector clearance

14.6.4.3 EVA Connectors Design Requirements

Connector coding

11.10.4 Example Connector Design Solutions

Connector replacement

11.10.3 Connector Design Requirements

Connector shape

11.10.3.5 Connector Identification/Alignment Design Requirements

Connector spacing

14.6.4.3 EVA Connectors Design Requirements

Connectors

6.4.3.7 Plugs and Receptacles Requirements
11.3.3.4 Equipment Drawer Design Requirements
11.10 Connectors
12.3.1.1 General Maintainability Design Requirements
12.3.2.2 Test Point Design Requirements

Consistent terminology

9.6.3.4.1 Design Requirements for Consistent Terminology

Consoles

9.2.2.2.4 Workstation Color Design Requirements

Container locations

9.5.3.1.9 Stowage Container Labeling Design Requirements

Containers

9.5.3.1.9 Stowage Container Labeling Design Requirements
11.8.3.2 Equipment Mobility Aid Design Requirements

Contaminants

5.1.2.2 Dangers Associated with Unsafe Atmospheres - Design Considerations
5.1.2.2.1.7.3 Toxic Gaseous Contaminants Design Considerations
5.1.2.3.1 Atmosphere Toxicological Monitoring Design Considerations
7.2.3.3.2 Exercise Countermeasures Design Considerations
8.2.2.2 Multipurpose Use of Volume - Design Considerations
8.3.2.1 General Adjacency Design Considerations
10.9.3.2.2 Environmental Monitoring Equipment
11.11.2.3 Physical Protection Design Considerations
11.12.2 Packaging Design Considerations

Contamination

9.2.5.2.2	Maintenance Workstation Design Requirements
10.10.3	Laundry Facility Design Requirements
10.11.3	Trash Management Facility Design Requirements
11.9.3.4	IVA Fastener Design Requirements
14.2.3.7	EVA Body Waste Management Design Requirements

Contamination prevention

11.11.2.3	Physical Protection Design Considerations

Contingency labels

9.5.3.1.11	Contingency Labels and Marking Devices Design Requirements

Contingency system

10.3.3.1	Defecation and Urination Facilities Design Requirements

Continuous noise

5.4.2.1.2	On-Orbit Phase Acoustic Environment
5.4.2.4.1.1.1	Wide-Band Long-Term Hearing Conservation Considerations
5.4.3.2.3.1	Wide-Band Long-Term Annoyance Noise Exposure Requirements
5.4.3.2.3.2	Narrow-Band Annoyance Noise Exposure Requirements

Continuous type thumbwheel

9.3.3.3.2	Thumbwheel Control Design Requirements

Contrast

4.2.2	Vision - Design Considerations

Control buttons

9.5.3.1.13	Caution and Warning Labels Design Requirements

Control location

9.3.3.2	Accidental Actuation Design Requirements

Control modes

9.4.2.3.3.5	Clock and Timer Design Requirements

Control operation

9.2.3.2.10 Control/Display Complexity and Precision Design Requirements

Control placement

9.2.3.2.4 Preferred Control/Display Location Design Requirements
9.2.5.1.2 Window Workstation Design Requirements

Control protection

9.3.3.2 Accidental Actuation Design Requirements

Control ratios

9.6.4.1 Design Considerations for User Input

Control spacing

9.2.3.2.1 Control Spacing Design Requirements

Control standardization

9.3.3.1 General Requirements

Control types

9.3.3.3 Control Types Design Requirements

Control uses

9.3.2.1 Input Devices Design Considerations

Control/display complexity

9.2.3.2.10 Control/Display Complexity and Precision Design Requirements

Control/display grouping

9.2.3.2.3 Control/Display Grouping Design Requirements

Control/display integration

9.2.3 Control/Display Placement and Integration

Control/display labels

9.2.3.2.8	Control/Display Movement Compatibility Design Requirements

Control/display location

9.2.3.2.4	Preferred Control/Display Location Design Requirements

Control/display maintenance

9.2.3.2.6	Maintenance Controls/Displays Design Requirements

Control/display movement compatibility

9.2.3.2.8	Control/Display Movement Compatibility Design Requirements

Control/display movement ratio

9.2.3.2.9	Control/Display Movement Ratio Design Requirements

Control/display placement

9.2.3	Control/Display Placement and Integration

Control/display relationship

9.2.3.2.4	Preferred Control/Display Location Design Requirements

Controls

6.3.3.8	Levers Cranks Hooks and Controls Requirements
9.2.2.2.4	Workstation Color Design Requirements
9.3	Controls
9.3.3	Control Design Requirements
9.3.4	Examples Control Design Solutions
9.5.3.1.12	Grouped Controls and Displays Design Requirements
11.2.3.1.1	Tool Handgrip Size and Shape Design Requirements

Convection

5.8.2.2.1	Modes of Heat Exchange - Design Considerations
5.8.2.2.2.1	Microgravity Effects on the Thermal Environment

Cooling

10.8.2	Microgravity Countermeasure Facility Design Considerations
10.8.3.4	Exercise Environment Design Requirements

Copier

13.4.3.2 Hardcopy Information Management Design Requirements

Copying data

9.6.3.3.1.2 Design Requirements for Editing

Core temperature

5.8.2.2.4 Human Performance in Cold - Design Considerations

Corners

6.3.3.2 Exposed Corner Requirements

Corrective maintenance

12.2 Design for Maintainability - Design Considerations

Cotter keys

11.9.3.4 IVA Fastener Design Requirements

Counter

9.2.3.2.9 Control/Display Movement Ratio Design Requirements

Counteracting forces

8.9.2.2 Considerations for Location of IVA Personnel Restraints

Countermeasure monitoring

10.8.3.1.2.2 Additional Capabilities
10.8.3.3 Microgravity Countermeasures Program Administration Design Requirements
12.8.3.4 Countermeasures Monitoring Design Requirements

Countermeasure protocol

10.8.3.3 Microgravity Countermeasures Program Administration Design Requirements
10.8.3.3 Microgravity Countermeasures Program Administration Design Requirements

Countermeasure schedules

10.8.3.5 Display Capabilities for Exercising Crewmembers Design Requirements

Countermeasures

10.8.2	Microgravity Countermeasure Facility Design Considerations

Counters

9.4.2.3.3.7	Digital Display Design Requirements

Cover clearance

11.4.3	Closures and Covers Design Requirements

Covers

6.3.3.5	Latches Requirements
9.3.3.2	Accidental Actuation Design Requirements
11.4	Closures and Covers
11.5.3.1	General Mounting Design Requirements
12.3.1.2	Physical Accessibility Design Requirements Cracks
13.2.3.1	General Housekeeping Design Requirements

Crank grip handle

9.3.3.3.4	Crank Design Requirements

Cranks

6.3.3.8	Levers Cranks Hooks and Controls Requirements
9.3.3.3.4	Crank Design Requirements

Crevices

13.2.3.1	General Housekeeping Design Requirements

Crew comfort

5.8.2	Thermal Environment Design Considerations
5.8.2.1	Mission Thermal Environment Design Considerations
5.8.2.2	Human Responses to Thermal Environments - Design Considerations
5.8.2.2.5	Special Ventilation & Metabolic Heat Removal Design Considerations
10.2.2	Personal Hygiene Design Considerations
10.5.3.1	Overall Galley and Wardroom Layout - Design Requirements
11.7.2.3.1	General Personnel Restraints Design Requirements
11.7.2.3.2.1	General Foot Restraint Design Requirements

Crew functions

8.3.2.2	Specific Adjacency Design Considerations

Crew quarter functions

10.4.2 Individual Crew Quarters Design Considerations

Crew quarter size

10.4.3 Individual Crew Quarters Design Requirements

Crew quarters

8.6.2.4 Social Design Considerations
10.4 Crew quarters

Crew station accessibility

8.2.3.1 Crew Station Arrangement and Grouping Design Requirements

Crew station activities

8.2.3.2 Dedicated vs. Multipurpose Space Utilization Design Requirements

Crew station adjacencies

8.3 Crew station adjacencies

Crew station escape

8.7.3.4 Emergency and Escape Route Design Requirements

Crew station location

8.2.3.3 Crew Station Location

Crew station orientation

8.4 Compartment and Crew Station Orientation

Crew station size

8.2.3.1 Crew Station Arrangement and Grouping Design Requirements

Crew station volume

8.6.3.1 Crew Station Body Envelopes Design Requirements

Crewmember orientation

8.8.3.2 Clearances Design Requirements

Crewmember size

10.5.3.1 Overall Galley and Wardroom Layout - Design Requirements

Critical commands

9.6.3.1.2 Design Requirements for User-Computer Dialogues

Critical verbal alarms

9.4.4.3.4.3 Verbal Alarm Signal Design Requirements

Cross contamination

5.1.2.3.2 Atmosphere Microbiological Monitoring Design Considerations
5.1.3.4.3 Cross Contamination Design Requirements
10.2.3.3 Oral Hygiene Design Requirements
10.3.2 Body Waste Management Facilities Design Considerations

Cross references

13.3.3.1 General Inventory Control Design Requirements

Current

6.4.3.18.2 Crewmember Applied Current Requirements

Current limits

6.4.3.18.2 Crewmember Applied Current Requirements

Cursor

9.6.3.1.8.2 Design Requirements for Data Forms/Form Filling
9.6.3.2 Design Requirements for Movement Within User Interfaces
9.6.3.2.1 Design Requirements for Position Designation (Cursor)
9.6.4.1 Design Considerations for User Input

Cursor fine positioning

9.6.3.2.1.1 Design Requirements for Pointing Cursor

Cutting data

9.6.3.3.1.2 Design Requirements for Editing

DIP switches

9.3.3.3.16 Printed Circuit (DIP) Switches Design Requirements

Damage inspection

12.3.1.2 Physical Accessibility Design Requirements

Dark adaptation

8.13.3.1.4 Illumination Levels for Dark Adaptation Design Requirements
9.2.5.1.2 Window Workstation Design Requirements
9.4.2.3.1.1 Illumination Design Requirements

Data display

9.6.2 Data Display
9.6.2.8 Design Requirements for Format

Data entry

9.6.3.1.8.2 Design Requirements for Data Forms/Form Filling
9.6.3.2.1 Design Requirements for Position Designation (Cursor)
9.6.3.4.5.1 Design Considerations for Prompts
9.6.4.3 Design Requirements for Data Entry Design
9.6.4.4 Design Requirements for Interactive Control

Data fields

9.6.2.8 Design Requirements for Format

Data file stowage

13.4.4 Example Information Management Design Solutions

Data files

9.6.3.2 Design Requirements for Movement Within User Interfaces
9.6.3.3.1.2 Design Requirements for Editing
13.4.3.1 General Information Management Design Requirements
13.4.4 Example Information Management Design Solutions

Data formats

13.3.3.1 General Inventory Control Design Requirements

Data form

9.6.2.8 Design Requirements for Format
9.6.3.1.8 Data Forms/Form Filling
9.6.3.4.5.1 Design Considerations for Prompts

Data link

10.8.3.4 Countermeasure Monitoring Design Requirements

Data management

13.4.2 Information Management Design Considerations
13.4.3.1 General Information Management Design Requirements
13.3.2 Inventory Control Design Considerations

Data manipulation

9.6.3.3 Design Requirements for Manipulating Data

Data problems

1.4.3.4 Unresolved Data Problems and Issues

Data recording

13.4.3.1 General Information Management Design Requirements

Data storage

13.3.2 Inventory Control Design Considerations
13.4.2 Information Management Design Considerations

Database

10.9.3.2.1 Data Base and Communications Capability
13.3.3.1 General Inventory Control Design Requirements

Deemphasis

9.4.3.3.2 Audio Input/Output Equipment Design Requirements

Dead end corridors

8.7.3.4 Emergency and Escape Route Design Requirements

Dead man controls

9.3.3.2 Accidental Actuation Design Requirements

Debris

10.2.3.4 Hair Cutting Design Requirements
10.2.3.5 Grooming and Shaving Design Requirements
10.7.2 Recreation Facility Design Considerations
10.8.2 Microgravity Countermeasure Facility Design Considerations
13.2.2 Housekeeping Design Considerations
13.2.3.1 General Housekeeping Design Requirements

Deceased

10.9.3.2.16 Facilities For Processing & Storage of a Deceased Crewmember

Deceased crewmember

7.3.3.4 Treatment (Therapeutics) Design Requirements

Decompression hazards

6.7 Decompression Hazards

Decompression sickness

5.1.2.2.1.7 Dysbarism Sickness Design Considerations
6.7.2 Decompression Sickness

Deconditioning

4.9.2 Strength - Design Considerations
7.2.3.3.2.1 Deconditioning Effects Of Reduced G - Design Considerations

Deconditioning countermeasures

7.2.3.3.2.2 Deconditioning Countermeasure Design Considerations

Decontamination

5.1.3.4.1 Microbial Decontamination Design Requirements
5.1.3.4.2 Verification Design Requirements

Decontamination verification

5.1.3.4.2 Verification Design Requirements

Decor

8.2.3.6 Decor and Lighting
8.12 Interior Design and Decor
8.12.2.2 Decorative Technique Design Considerations

Decor cost

8.12.3.2 Decor Flexibility

Decor durability

8.12.3.5 Decor Durability

Decor materials

8.12.2.4 Materials Design Considerations

Decreased proficiency boundary

5.5.2.4.2 Vibration Exposure Criteria Design Consideration(0.1 to 1 Hz)
5.5.3.2.2 Decreased Proficiency Boundary

Dedicated function areas

9.6.3.2.1 Design Requirements for Position Designation (Cursor)

Default

9.6.3.2.1 Design Requirements for Position Designation (Cursor)
9.6.2.3.2 Design Requirements for Text
9.6.3.1.8.3 Design Requirements for Default Values for Data Forms

Default values

9.6.3.1.8.3 Design Requirements for Default Values for Data Forms

Defecation

10.3.2 Body Waste Management Facilities Design Considerations
10.3.3.1 Defecation and Urination Facilities Design Requirements

Defecation cleansing

10.3.2 Body Waste Management Facilities Design Considerations

Definitions

9.6.3.4.7.2 Design Requirements for On-Line Help

Degree symbols

9.5.3.1.14.5 Special Character Design Requirements

Deleting data

9.6.3.3.1.2 Design Requirements for Editing

Denitrogenation

5.1.2.2.1.7.1 Evolved Gas Dysbarism Design Considerations

Dental equipment

10.9.3.2.9 Dental Care Equipment

Deodorant

7.2.5.3.1 Body Grooming Design Requirements

Depressurization

14.2.3.9 EVA Suit Pressure Design Requirements

Design Considerations

1.4.1 Generic Topical Organization

Design Requirements

1.4.1 Generic Topical Organization

Design eye volume

9.2.5.1.2 Window Workstation Design Requirements

Detent controls

9.3.3.1 General Requirements

Detergent

13.2.4 Example Housekeeping Design Solutions

Detergents

13.2.3.2 Surface Cleaning Design Requirements

Diagnostic measures

7.3.2.2 Anticipated Illnesses and Injuries - Design Considerations

Discardable items

9.5.3.1.10 Failed/Expendable Item Design Requirements

Digital displays

9.4.2.3.3.7 Digital Display Design Requirements

Diluent gas

5.1.2 Atmosphere Design Considerations
5.1.2.1 Safe Atmospheres - Design Considerations
5.1.2.1.1 Gas Composition and Pressure Design Considerations
5.1.2.1.2 Gas Pressure Design Considerations
5.1.2.1.3 Mission Related Design Considerations
5.1.2.1.4 Human Response to the Diluent Gas Environment Design Considerations
5.1.2.1.4.1 Metabolic Factors Design Considerations
5.1.2.2.1.7 Dysbarism Sickness Design Considerations

Dim to off

9.4.2.2 Visual Display Design Considerations

Dimensional data

3.3.1.3 Body Size Data Design Requirements

Dimensional unit

9.6.3.1.8.2 Design Requirements for Data Forms/Form Filling

Dimensions

9.3.3.3.17 Key-Operated Switch Design Requirements

Direct manipulation

9.6.3.1.7 Direct Manipulation
9.6.3.1.7.2 Design Requirements for Direct Manipulation

Direct manipulation interface

9.6.3.1.7.4 Design Requirements for Actions in Direct Manipulation Interface

Direct voice communication

5.4.2.4.2.1 Direct Voice Communications Criteria Considerations

Directional orientation

8.5.3.2 Directional Designation Design Requirements

Directions

8.5.3.2 Directional Designation Design Requirements

Discrete position thumbwheel

9.3.3.3.2 Thumbwheel Control Design Requirements

Disinfectant

7.2.7.2.2.2 Microbiological Monitoring Design Considerations

Disinfection

10.10.3 Laundry Facility Design Requirements

Disorientation

4.5.2.1 Spatial Disorientation
8.4.2 Orientation Design Considerations

Display contrast

9.4.2.3.1.2 Display Contrast Design Requirements
9.4.2.3.3.9 Visual Display Terminal (VDT) Design Requirements

Display duration

9.4.2.3.2 Information Presentation Design Requirements

Display face facsimiles

9.4.2.3.3.9 Visual Display Terminal (VDT) Design Requirements

Display failure

9.4.2.3.2 Information Presentation Design Requirements

Display flicker

9.4.2.3.3.9 Visual Display Terminal (VDT) Design Requirements

Display format

9.6.2.8 Design Requirements for Format

Display freeze mode

9.6.2.9.2 Design Requirements for Information Display Rate

Display functionality

9.2.3.2.2 Display Readability Design Requirements

Display glare

9.4.2.3.3.9 Visual Display Terminal (VDT) Design Requirements

Display information

9.2.3.2.10 Control/Display Complexity and Precision Design Requirements

Display label placement

9.5.3.1.3 Display Label Placement Design Requirements

Display luminance

9.4.2.3.3.9 Visual Display Terminal (VDT) Design Requirements

Display maintenance

9.4.2.3.4 Display Maintenance Design Requirements

Display orientation

9.2.3.2.2 Display Readability Design Requirements

Display overlays

9.4.2.3.3.9 Visual Display Terminal (VDT) Design Requirements

Display range

9.4.2.3.2 Information Presentation Design Requirements

Display readability

9.2.3.2.2 Display Readability Design Requirements
9.4.2.2 Visual Display Design Considerations

Display resolution

9.4.2.3.3.9 Visual Display Terminal (VDT) Design Requirements

Display sequence

9.6.2.8 Design Requirements for Format

Display update

9.4.2.3.2 Information Presentation Design Requirements

Displays

9.4 Displays
9.4.2.3.1.5 Display Size Design Requirements
9.5.3.1.12 Grouped Controls and Displays Design Requirements
9.6.4.4 Design Requirements for Interactive Control

Disposable bags

13.2.3.3 Vacuum Cleaning Design Requirements

Disposable clothing

11.13.1.2.2 Disposable vs Reusable Clothing

Disposable gloves

13.2.4 Example Housekeeping Design Solutions

Distortion

11.11.2.1 Optical Characteristics Design Considerations
11.11.3.1.3 Optical Characteristics

Distractions

9.2.2.2.2 Congestion and Interference Design Requirements

Distributed storage

10.12.2 Stowage Facility Design Considerations

Disuse atrophy

5.2.2.1 Physiological Effects of Microgravity

Document restraints

13.4.3.2 Hardcopy Information Management Design Requirements

Document stowage

13.4.2 Information Management Design Considerations

Documentation

13.4.4 Example Information Management Design Solutions

Door opening size

8.10.3.5 Minimum Size Design Requirements

Door operating force

8.10.2 Hatch and Door Design Considerations
8.10.3.4 Operating Forces Design Requirements

Door shape

8.10.3.6 Door and Hatch Shape Design Requirements

Door size

8.10.2 Hatch and Door Design Considerations

Door types

8.10.2 Hatch and Door Design Considerations

Doors

8.10 Hatches and Doors
8.10.3 Hatch and Door Design Requirements

Dose

5.7.2.1.3.1 Units of Measure Used to Describe Human Responses to IO

Downward acceleration

5.3.2.2.2 Subjective Effects of Linear Accelerations

Drawer alignment

11.3.3.1 Drawer and Rack Interfacing Requirements

Drawer arrangement

11.3.3.3 Stowage Drawer Design Requirements

Drawer design

11.3.3 Drawer and Rack Design Requirements

Drawer movement

11.3.3.1 Drawer and Rack Interfacing Requirements

Drawer size

11.3.3.1 Drawer and Rack Interfacing Requirements

Drawer stops

11.3.3.1 Drawer and Rack Interfacing Requirements

Drawers

11.3 Drawers and Racks
12.3.1.2 Physical Accessibility Design Requirements

Dressing area

10.2.3.2 Whole Body Cleansing Design Requirements

Drift

8.9.2.2 Considerations for Location of IVA Personnel Restraints

Driver-type tools

11.2.3.1.3 Tool Actuation Forces and Direction of Action Design Requirements

Drugs

4.5.2.2 Space Adaptation Syndrome

Dry bulb temperature

5.8.2 Thermal Environment Design Considerations

Dry wipes

13.2.3.2 Surface Cleaning Design Requirements
13.2.4 Example Housekeeping Design Solutions

Dual lamps

9.4.2.3.4 Display Maintenance Design Requirements

Dual - purpose fasteners

11.9.2 Fastener Design Considerations

Dynamic range

9.3.3.5 Speech Transmission Equipment Design Requirements

Dysbarism

5.1.2.2.1.7 Dysbarism Sickness Design Considerations
5.1.2.2.1.7.1 Evolved Gas Dysbarism Design Considerations
5.1.2.2.1.7.2 Trapped Gas Dysbarism Design Considerations

ECLSS

5.1.3.1 Atmosphere Composition and Pressure Design Requirements

EMU boots

14.3.4.2 STS EMU Boot Dimensions

EMU dimensions

14.3.4.1 STS EMU Dimensions

EMU glove

14.2.4.5 EVA Glove Example Design Solutions

EMU helmet

14.3.4.4 STS EVA Helmet Visual Range

EMU manloads

14.3.4.5 STS EMU Man Induced Load Examples

EMU visor

14.3.4.4 STS EVA Helmet Visual Range

EVA

14.1 General EVA Information

EVA UV light protection

14.2.2.10 EVA Radiation Dosage Design Considerations

EVA UV eye protection

14.2.3.10 EVA Radiation Dosage Design Requirements

EVA actuated fasteners

14.6.3.3 EVA Fasteners Design Requirements

EVA airlock hatches

14.5.2.4 EVA Airlock Design Considerations
14.5.3.4 EVA Airlock Design Requirements

EVA airlock volumes

14.5.2.4 EVA Airlock Design Considerations

EVA airlocks

14.5.2.4 EVA Airlock Design Considerations
14.5.3.4 EVA Airlock Design Requirements

EVA alternatives

14.1.2.1.4 Alternative Approaches to EVA

EVA anthropometry

14.3 EVA Anthropometry
14.3.2 EVA Anthropometric Design Considerations
14.3.3 EVA Anthropometry Design Requirements
14.3.4 Example EVA Anthropometric Design Solutions

EVA applications

14.1.2.1.1 Applications of EVA

EVA atmosphere

14.2.2.9 EVA Suit Pressure Design Considerations

EVA battery powered tools

14.6.2.3 EVA Tools Design Requirements

EVA body waste management

14.2.2.7 EVA Body Waste Management Design Considerations
14.2.3.7 EVA Body Waste Management Design Requirements
14.2.4.1 EVA Body Waste Management Example Design Solutions

EVA bolt fasteners

14.6.3.3 EVA Fasteners Design Requirements

EVA boots

14.3.2.1.2 Space Suit Boot Design Considerations and Dimensions
14.3.4.2 STS EMU Boot Dimensions

EVA captive fasteners

14.6.3.3 EVA Fasteners Design Requirements

EVA caution and warning

14.2.3.8 EVA Medical Monitoring Design Requirements
14.5.3.1 EVA Translation Route Design Requirements

EVA checkout time

14.2.3.8 EVA Medical Monitoring Design Requirements

EVA clearances

14.3.2.5 EVA Working Envelopes

EVA coding

14.4.2.3 EVA Controls and Displays Design Considerations
14.4.3.2 EVA Control and Display Design Requirements

EVA complexity

14.1.2 General EVA Design Considerations

EVA connector clearance

14.6.4.2 EVA Connectors Design Considerations

EVA connector design

14.6.4.2 EVA Connectors Design Considerations
14.6.4.3 EVA Connectors Design Requirements

EVA connectors

14.6 EVA Tools, Fasteners and Connectors
14.6.4 EVA Connectors

EVA controls

14.4.2 EVA Workstation and Restraint Design Considerations
14.4.2.3 EVA Controls and Displays Design Considerations
14.4.3.2 EVA Control and Display Design Requirements

EVA corridors

14.5.3.1	EVA Translation Route Design Requirements

EVA criticality

14.1.2	General EVA Design Considerations

EVA displays

14.4.2	EVA Workstation and Restraint Design Considerations
14.4.2.3	EVA Controls and Displays Design Considerations
14.4.3.2	EVA Control and Display Design Requirements

EVA doors

14.5.2.1	EVA Translation Route Design Considerations
14.5.3.1	EVA Translation Route Design Requirements

EVA enhancement equipment

14.7.2	EVA Enhancement Systems Design Considerations

EVA enhancement systems

14.7	EVA enhancement systems

EVA equipment

14.5.3.1	EVA Translation Route Design Requirements

EVA equipment tethers

14.4.3.5	EVA Equipment Tether Design Requirements

EVA equipment transfer

14.5.2.6	EVA Equipment Transfer Design Considerations
14.5.3.6	EVA Equipment Transfer Design Requirements

EVA eye/hand coordination

14.2.2.2	EVA Eye/Hand Coordination Design Considerations
14.2.3.2	EVA Eye/Hand Coordination Design Requirements

EVA fastener size

14.6.3.3 EVA Fasteners Design Requirements

EVA fasteners

14.6 EVA Tools, Fasteners and Connectors
14.6.3.2 EVA Fasteners Design Considerations

EVA field of view

14.3.2.6 EVA Head Movement and Viewing Limits
14.4.3.1 EVA Work Envelope Design Requirements
14.4.3.3 EVA Workstation Lighting Design Requirements

EVA flashlights

14.4.4.1 EVA Workstation Lighting Example Design Solutions

EVA food

14.2.2.6 EVA Food and Drinking Water Design Considerations
14.2.3.6 EVA Food and Drinking Water Design Requirements
14.2.4.2 EVA Food and Drinking Water Example Design Solution

EVA foot restraints

14.4.2.5 EVA Crew Restraint Design Considerations
14.4.3.4 EVA Crew Restraint Design Requirements
14.4.4.2 EVA Crew Restraint Example Design Solutions

EVA glove

14.2.2.11 EVA Touch Temperature Considerations
14.2.3.11 EVA Touch Temperature and Pressure Design Requirements
14.2.4.5 EVA Glove Example Design Solutions
14.3.2.1 Space Suit Design Considerations and Dimensions
14.3.2.1.1 Space Suit Glove Design Considerations and Dimensions

EVA glove assembly

14.3.2.1.1 Space Suit Glove Design Considerations and Dimensions

EVA glove sections

14.2.4.5 EVA Glove Example Design Solutions

EVA handholds

14.4.2.5 EVA Crew Restraint Design Considerations
14.4.3.4 EVA Crew Restraint Design Requirements
14.5.3.1 EVA Translation Route Design Requirements
14.5.3.2 EVA Mobility Aids Design Requirements

EVA handrails

14.5.3.2 EVA Mobility Aids Design Requirements

EVA hardware

14.4.2 EVA Workstation and Restraint Design Considerations
14.4.2.2 Hardware Design Considerations for EVA Access

EVA hatches

14.5.2.1 EVA Translation Route Design Considerations
14.5.3.1 EVA Translation Route Design Requirements

EVA hazards

14.1.3 General EVA Safety Design Requirements
14.6.4.3 EVA Connectors Design Requirements

EVA helmet

14.2.3.7 EVA Body Waste Management Design Requirements
14.3.2.1.3 Space Suit Helmet Design Considerations and Dimensions

EVA joint mobility ranges

14.3.4.3 Example Pressure Suit Joint Mobility

EVA labels

14.4.2.3 EVA Controls and Displays Design Considerations
14.4.3.2 EVA Control and Display Design Requirements

EVA light beam

14.4.3.3 EVA Workstation Lighting Design Requirements

EVA lighting

14.4.2	EVA Workstation and Restraint Design Considerations
14.4.2.4	EVA Workstation Lighting Design Considerations
14.4.3.3	EVA Workstation Lighting Design Requirements
14.4.4	Example EVA Workstation and Restraint Design Solutions
14.4.4.1	EVA Workstation Lighting Example Design Solutions

EVA luminance ratio

14.4.2.4	EVA Workstation Lighting Design Considerations

EVA maintenance

12.3.1.1	General Maintainability Design Requirements

EVA medical monitoring

14.2.2.8	EVA Medical Monitoring Design Considerations
14.2.4.3	EVA Example Medical Monitoring Design Solutions

EVA metabolic workload

14.2.3.5	EVA Metabolic Workload Design Requirements

EVA mobility aids

14.2.3.8	EVA Medical Monitoring Design Requirements
14.5	EVA Mobility and Translation
14.5.2.2	EVA Mobility Aids Design Considerations
14.5.3	EVA Mobility and Translation Design Requirements
14.5.3.2	EVA Mobility Aids Design Requirements

EVA movement range

14.3.2.3	EVA Movement Ranges
14.3.4.3	Example Pressure Suit Joint Mobility

EVA neutral body posture

14.3.2.4	EVA Neutral Body Posture
14.4.3.1	EVA Work Envelope Design Requirements

EVA operations

14.1.2	General EVA Design Considerations

EVA partial pressure exposure

14.2.3.9 EVA Suit Pressure Design Requirements

EVA passageways

14.5.2.5 EVA Passageway Design Considerations
14.5.3.5 EVA Passageway Design Requirements

EVA physiological aspects

14.2.3 EVA Physiological Design Requirements
14.2.4 Example EVA Physiological Design Solutions

EVA physiological design

14.2.2 EVA Physiological Design Considerations

EVA physiology

14.2 EVA Physiology

EVA portable lighting

14.4.4.1 EVA Workstation Lighting Example Design Solutions

EVA power tools

14.6.2.3 EVA Tools Design Requirements
14.6.2.4.2 Example EVA Power Tool Design Solutions

EVA pressure suit

14.3.2.1 Space Suit Design Considerations and Dimensions
14.3.2.2 Space Suit Joint Motion Design Considerations

EVA radiation

14.2.4.4 EVA Radiation Dosage Example Design Solutions

EVA radiation exposure

14.2.2.10 EVA Radiation Dosage Design Considerations
14.2.3.10 EVA Radiation Dosage Design Requirements

EVA radiation exposure limits

14.2.3.10 EVA Radiation Dosage Design Requirements

EVA radiation protection

14.2.2.10 EVA Radiation Dosage Design Considerations

EVA ratcheting

14.6.2.3 EVA Tools Design Requirements

EVA reach envelope

14.3.2.3 EVA Movement Ranges
14.4.3.1 EVA Work Envelope Design Requirements

EVA reaction time

14.2.2.3 EVA Reaction Time Design Considerations
14.2.3.3 EVA Reaction Time Design Requirements

EVA requirements

14.4.3 EVA Workstation and Restraint Design Requirements

EVA restraints

14.4 EVA Workstations and Restraints
14.4.2 EVA Workstation and Restraint Design Considerations
14.4.4 Example EVA Workstation and Restraint Design Solutions
14.5.2.3 EVA Translation Restraints Design Considerations

EVA safety

14.1.2.1.3 Limitations of EVA
14.1.3 General EVA Safety Design Requirements
14.4.2.4 EVA Workstation Lighting Design Considerations

EVA safety hooks

14.4.3.4 EVA Crew Restraint Design Requirements

EVA space suit

14.3.2.1 Space Suit Design Considerations and Dimensions
14.3.2.2 Space Suit Joint Motion Design Considerations
14.3.2.7 EVA Space Suit Measurement Considerations

EVA strength

14.2.2.4 EVA Strength-Related Design Considerations
14.2.3.4 EVA Strength-Related Design Requirements

EVA suit measurements

14.3.2.7 EVA Space Suit Measurement Considerations

EVA suit pressure

14.2.2.9 EVA Suit Pressure Design Considerations
14.2.3.9 EVA Suit Pressure Design Requirements

EVA system designs

14.1.3 General EVA Safety Design Requirements

EVA tether attachment points

14.4.3.5 EVA Equipment Tether Design Requirements

EVA tether hooks

14.4.4.3 EVA Equipment Tether Hook Example Design Solution
14.5.3.3 EVA Translation Restraints Design Requirements

EVA tether locks

14.4.3.5 EVA Equipment Tether Design Requirements

EVA tethers

14.4.3.4 EVA Crew Restraint Design Requirements
14.5.2.3 EVA Translation Restraints Design Considerations
14.5.3.3 EVA Translation Restraints Design Requirements
14.7.3 EVA Enhancement Systems Design Requirements

EVA tool access

14.3.2.5 EVA Working Envelopes

EVA tool design

14.6.2.4 Example EVA Tools Design Solutions

EVA tool handles

14.6.2.3 EVA Tools Design Requirements

EVA tool tethering

14.6.2.3 EVA Tools Design Requirements

EVA tools

14.5.3.4 EVA Airlock Design Requirements
14.6 EVA Tools Fasteners and Connectors
14.6.2 EVA Tools

EVA touch pressures

14.2.3.11 EVA Touch Temperature and Pressure Design Requirements

EVA touch temperature

14.2.2.11 EVA Touch Temperature Considerations
14.2.3.11 EVA Touch Temperature and Pressure Design Requirements

EVA translation

14.5 EVA Mobility and Translation
14.5.2.4 EVA Airlock Design Considerations
14.5.3 EVA Mobility and Translation Design Requirements
14.5.3.6 EVA Equipment Transfer Design Requirements

EVA translation routes

14.5.3.1 EVA Translation Route Design Requirements

EVA translation restraints

14.5.2.3 EVA Translation Restraints Design Considerations
14.5.3.3 EVA Translation Restraints Design Requirements

EVA translation routes

14.5.2.1 EVA Translation Route Design Considerations

EVA tunnels

14.5.2.5 EVA Passageway Design Considerations

EVA vision

14.2.3.1 EVA Vision Design Requirements
14.2.2.3 EVA Reaction Time Design Considerations
14.2.2.1 EVA Vision Design Considerations

EVA vision cone

14.3.2.6 EVA Head Movement and Viewing Limits

EVA waist tethers

14.4.4.2 EVA Crew Restraint Example Design Solutions

EVA water

14.2.2.6 EVA Food and Drinking Water Design Considerations
14.2.3.6 EVA Food and Drinking Water Design Requirements
14.2.4.2 EVA Food and Drinking Water Example Design Solution

EVA wing connectors

14.6.4.3 EVA Connectors Design Requirements

EVA work envelopes

14.3.2.5 EVA Working Envelopes
14.4.2 EVA Workstation and Restraint Design Considerations
14.4.2.1 EVA Work Envelope Design Considerations

EVA workload

14.2.2.5 EVA Workload Design Considerations
14.2.3.5 EVA Metabolic Workload Design Requirements
14.6.2.2 EVA Tools Design Considerations

EVA workstations

14.4 EVA Workstations and Restraints
14.4.4 Example EVA Workstation and Restraint Design Solutions

Ear problems

5.1.2.2.1.7.2 Trapped Gas Dysbarism Design Considerations

Earphones

9.4.3.3.2 Audio Input/Output Equipment Design Requirements

Earth cues

4.2.2 Vision - Design Considerations

Eating

5.2.2.2 Sleeping Eating and Mobility Changes in Microgravity

Edges

6.3.3.1 Corner and Edge Requirements
11.11.3.2.1 Materials Reqirements

Editing

9.6.3.3.1 Editing
9.6.3.4.2.1 Design Considerations for User Feedback

Editing commands

9.6.3.3.1.1 Design Considerations for Editing

Editing graphics

9.6.3.3.1.3 Design Requirements for Graphics Editing

Editing methods

9.6.3.3.1.2 Design Requirements for Editing

Editing procedures

9.6.3.3.1.2 Design Requirements for Editing

Effective temperature

5.8.2 Thermal Environment Design Considerations

Effects of noise

5.4.2.3 Human Responses to Noise - Design Considerations

Effects of vibration

5.5.2.3.3 Discomfort/Annoyance Effects of Vibration

Electrical connector plugs

11.10.3.2 Electrical Connectors Design Requirements

Electrical connectors

11.10.2 Connector Design Considerations
11.10.3.2 Electrical Connectors Design Requirements
14.6.4.3 EVA Connectors Design Requirements

Electrical hazards

6.4 Electrical hazards
6.4.1 Introduction
6.4.2 Electrical Hazards Design Considerations
6.4.3 Electrical Hazards Design Requirements
14.1.4 Space Suit Electrical Hazards Reduction Design Example

Electrical protection

6.4.3 Electrical Hazard Design Requirements

Electrical shock

6.4.2. Electrical Hazard Design Considerations
6.4.3 Electrical Hazard Design Requirements
6.4.3.2 Electrical Bonding
6.4.3.19 Bioinstrumentation System Microshock Protection Requirements

Electrical shock protection

6.4.3 Electrical Hazard Design Requirements
6.4.3.12 Overload Protection

Electrocardiograph

10.8.3.4 Countermeasure Monitoring Design Requirements

Electromagnetic hazards

5.7.3.1.4 Non-Ionizing Radiation Protection Design Considerations

Electromagnetic leakage

5.7.3.1.4 Non-Ionizing Radiation Protection Design Considerations

Electromagnetic radiation

5.7.3.1.1 Types of Non-Ionizing Radiation

Electromagnetic shielding

5.7.2.1.4.2 Electromagnetic Shielding

Electronic data storage

13.4.3.3 Electronic Information Management Design Requirements

Emergency alarm

9.4.4.3.1 Alarm Classification Design Requirements

Emergency controls/displays

9.2.3.2.7 Emergency Control/Display Placement Design Requirements

Emergency displays

9.4.4.3.1.1 Emergency Display Design Requirements

Emergency exit

8.10.3.1 Location Design Requirements

Emergency lights

8.13.3.4 Lighting Fixtures and Controls Design Requirements

Emergency return route

8.7.3.4 Emergency and Escape Route Design Requirements

Emergency use items

9.5.3.1.13 Caution and Warning Labels Design Requirements

Endurance

4.9.2	Strength - Design Considerations
4.10.2	Workload Design Considerations

Engravings

9.5.3.1.14.9	Character Measurement Design Requirements

Entertainment

10.8.3.5	Display Capabilities for Exercising Crewmembers Design Requirements

Entry

10.4.3	Individual Crew Quarters Design Requirements

Entry phase noise

5.4.2.1.3	Entry Phase Acoustic Environment

Entry to 1-g

7.2.3.2	Reduced Gravity Countermeasures Design Considerations

Envelope geometry

8.6	Envelope Geometry for Crew Functions

Environment

7.2.2.2.3	Food and Water Quality and Quantity - Design Considerations

Environmental control

5.1.2	Atmosphere Design Considerations
5.1.2.1	Safe Atmospheres - Design Considerations
5.1.2.1.1	Gas Composition and Pressure Design Considerations
5.1.2.3.1	Atmosphere Toxicological Monitoring Design Considerations
10.4.3	Individual Crew Quarters Design Requirements

Environmental effects

5.9	Combined Environmental Effects

Environmental monitoring equipment

10.9.3.2.2 Environmental Monitoring Equipment

Environmental monitoring system

5.1.3.5 Baro-Thermal Monitoring Design Requirements

Environmental stressors

5.9.2 Combined Environmental Effects Design Considerations

Equipment

8.3.3.1 Adjacent Crew Station Design Requirements
8.4.2 Orientation Design Considerations
9.5.2 Labeling and Coding Design Considerations
11.0 Hardware and Equipment

Equipment accessibility

12.3.1.2 Physical Accessibility Design Requirements

Equipment accidents

6.2.2.2 Crew Induced Accidents

Equipment arrangement

8.2.2.4 Module Layout and Arrangement Design Considerations

Equipment cleansing

7.2.5.3.5 Personal Clothing & Equipment Cleansing Design Requirements

Equipment clearance

8.8.3.2 Clearances Design Requirements

Equipment design

12.3.1 Equipment Design Requirements
12.3.1.1 General Maintainability Design Requirements

Equipment drawers

11.3.2	Drawer and Rack Design Considerations
11.3.3.2	Design Requirements Common to Both Stowage & Equipment Drawers
11.3.3.4	Equipment Drawer Design Requirements
11.5.3.1	General Mounting Design Requirements

Equipment hazards

6.2.2.2	Crew Induced Accidents

Equipment identification

9.5.3.1.6	Equipment Identification Design Requirements

Equipment layout

11.3.3.4	Equipment Drawer Design Requirements
11.5.3.1	General Mounting Design Requirements

Equipment location

8.8.3.3	Translation Path Obstructions and Hazards-Design Requirement

Equipment maintenance

11.4.3	Closures and Covers Design Requirements

Equipment marking

9.5.3.1.6	Equipment Identification Design Requirements

Equipment mobility aids

11.8.3	Equipment Mobility Aids

Equipment name

9.5.3.1.8	Operating Instruction Design Requirements

Equipment noise

5.4.2.2	Propagation of Noise - Design Considerations
5.4.3.1	General Acoustic Design Goals

Equipment replacement

12.3.1.4 Removal Replacement and Modularity Design Requirements

Equipment replacement matrix

12.3.3 Maintenance Information Management Systems Design Requirements

Equipment response

9.4.2.3.2 Information Presentation Design Requirements

Equipment restraint design

11.7.3.3 Equipment Restraint Design Requirements

Equipment restraints

9.2.4.2.3 Workstation Restraints and Mobility Aid Design Requirements
11.3.3.3 Stowage Drawer Design Requirements
11.7.3 Equipment Restraints
13.4.3.2 Hardcopy Information Management Design Requirements

Equipment size

3.2.2 Application of Anthropometric Data - Design Considerations
8.7.2.3 Equipment Transfer Design Considerations

Equipment transfer

8.7.2.3 Equipment Transfer Design Considerations
11.8.3.3 Example Mobility Aids Design Solutions

Equipment vibration

5.5.3.1 General Vibration Design Requirements

Error correction

9.6.3.4.4 *Design Requirements for Error Handling*

Error detection

9.6.3.4.4 Design Requirements for Error Handling

Error feedback

9.6.3.4.4	Design Requirements for Error Handling

Error handling

9.6.3.4.4	Design Requirements for Error Handling

Error message content

9.6.3.4.4	Design Requirements for Error Handling

Error message locations

9.6.3.4.4	Design Requirements for Error Handling

Error recovery

9.6.3.4.4	Design Requirements for Error Handling

Escape

9.6.2.1	Design Considerations for Data Display

Escape route

8.7.3.4	Emergency and Escape Route Design Requirements

Example Design Solutions

1.4.1	Generic Topical Organization

Exercise trends

10.8.3.3	Display Capabilities for Exercising Crewmembers Design Requirements

Exercise

5.1.2.2.1.7.1	Evolved Gas Dysbarism Design Considerations
7.2.3.3.2.2	Deconditioning Countermeasure Design Considerations
7.2.3.3.3	Exercise Countermeasure Design Requirements
7.2.7.3.1	Routine Crew Health Monitoring Design Requirements
10.7.2	Recreation Facility Design Considerations
10.8.2	Microgravity Countermeasure Facility Design Considerations
10.8.3.4	Countermeasure Monitoring Design Requirements
10.8.3.5	Display Capabilities for Exercising Crewmembers Design Requirements

10.8.3.1.2 Exercise Countermeasure Environment Design Requirements
10.8.4 Example Microgravity Countermeasures Design Solution

Exercise countermeasures

7.2.3.3 Exercise Countermeasures
10.8.3.1.2 Exercise Countermeasures without "S" Environment Design Requirements

Exercise equipment

10.8.3.1.1 Exercise Equipment
10.9.3.2.7 Countermeasures

Exit

10.4.3 Individual Crew Quarters Design Requirements

Exiting

9.6.3.3.2.2 Design Requirements for Saving

Expectoration

10.2.3.3 Oral Hygiene Design Requirements

Expendable items

9.5.3.1.10 Failed/Expendable Item Design Requirements

Exterior light controls

14.4.3.3 EVA Workstation Lighting Design Requirements

Exterior power switches

14.4.3.3 EVA Workstation Lighting Design Requirements

Extravehicular activity

14.0 Extravehicular activity (EVA)

Eyeglasses

11.13.2.3 Personal Ancillary Equipment Design Requirements

Fabrics

11.13.1.3.1 General Clothing Design Requirements

Facilities

13.0 Facility Management

Facility management

13.0 Facility management

Fail-safe design

6.2.3 General Safety Design Requirements

Failed items

9.5.3.1.10 Failed/Expendable Item Design Requirements

False alarms

9.4.3.3.1 General Design Requirements

Fans

5.8.3.2 Thermal Monitoring and Control Design Requirements

Fastener design

11.9.3 Fastener Design Requirements

Fastener heads

11.9.3.3 Tool-Actuated Fastener Design Requirements
11.9.3.4 IVA Fastener Design Requirements

Fastener knobs

11.9.3.2 Hand-Actuated Fastener Design Requirements

Fastener location

11.9.3.1 General Fastener Design Requirements

Fastener locks

11.9.3.3 Tool-Actuated Fastener Design Requirements

Fastener lubrication

11.9.3.4 IVA Fastener Design Requirements

Fasteners

11.2.3.2 Tool Commonality Design Requirements
11.2.3.6 Tool Access Design Requirements
11.5.3.1 General Mounting Design Requirements
11.9 Fasteners
12.3.1.1 General Maintainability Design Requirement
12.3.1.4 Removal Replacement and Modularity Design Requirements

Fatigue

4.10.2 Workload Design Considerations
5.2.2.1 Physiological Effects of Microgravity

Fatigue decreased proficiency boundary

5.5.2.4.3 Vibration Exposure Criteria Design Consideration(1 to 80 Hz)

Fault detection

12.3.2.1 Fault Detection and Isolation Design Requirements

Fault detection

12.3.3 Maintenance Information Management Systems Design Requirements

Fault isolation

12.3.2.1 Fault Detection and Isolation Design Requirements

Feedback

9.6.2.1 Design Considerations for Data Display
9.6.3.1.2 Design Requirements for User-Computer Dialogues
9.6.3.4.2.2 Design Requirements for User Feedback

Feedback noise

9.4.3.3.2 Audio Input/Output Equipment Design Requirements

Feet placement

3.3.4.2 Neutral Body Posture Design Considerations

Fiber optics

11.10.3.4 Optical Connectors Design Requirements

Field labels

9.6.3.1.8.2 Design Requirements for Data Forms/Form Filling

Field length

9.6.3.1.8.2 Design Requirements for Data Forms/Form Filling

Field of view

9.2.4.2.2 Visual Space Design Requirements
9.2.5.1.2 Window Workstation Design Requirements

Field separation

9.6.3.1.8.2 Design Requirements for Data Forms/Form Filling

File names

9.6.4.3 Design Requirements for Data Entry Design

Fillets

12.3.1.2 Physical Accessibility Design Requirements

Filters

11.11.2.2 Visual Protection Design Considerations
13.2.2 Housekeeping Design Considerations
13.2.4 Example Housekeeping Design Solutions

Finger back layup

14.2.4.5 EVA Glove Example Design Solutions

Finger front

14.2.4.5 EVA Glove Example Design Solutions

Finger placement aids

9.3.3.4.1.2 General

Finger tip layout

14.2.4.5 EVA Glove Example Design Solutions

Fire detection system

6.6.2 Fire Hazards Design Considerations
6.6.3.2.1 Detection Systems Signals
6.6.3.2.2 Reset and Self-test
6.6.3.3 Warning System Requirements

Fire extinguishers

6.6.2 Fire Hazards Design Considerations
6.6.3.4 Extinguishing Requirements

Fire hazard

6.6.2 Fire Hazards Design Considerations

Fire protection

6.6 Fire Hazards
6.6.3.1.1 Fire Protection System

Fire retardant materials

6.6.3.1.2 Material Selection

Fire warning

6.6.3.3 Warning System Requirements

Fixed body restraints

11.7.2.2 Personnel Restraints Design Considerations

Fixed foot restraints

11.7.2.3.2.1 General Foot Restraint Design Requirements

Fixed function keys

9.6.3.1.5 Design Requirements for Function Keys

Fixed handrails

11.8.2.2.6 Handhold and Handrail Mounting Design Requirements

Fixed mobility aid location

8.9.4 Example of IVA Restraints Architectural Integration Design Solutions

Fixture protection

8.13.3.4 Lighting Fixtures and Controls Design Requirements

Flag indicators

9.4.2.3.3.6 Flag Display Design Requirements

Flags

9.4.2.3.3.6 Flag Display Design Requirements

Flashing lights

9.5.3.2 Coding Design Requirements

Flowchart

9.6.2.5.2 Design Requirements for Graphics

Fluid connectors

11.10.3.1 Fluid Connectors Design Requirements

Fluid line connectors

11.10.3.1 Fluid Connectors Design Requirements
12.3.1.3 Visual Access Design Requirements

Fluid loading

10.8.3.1 Microgravity Countermeasures Equipment/Supplies Design Requirements

Fluid shifts

3.3.5.2	Body Surface Area Design Considerations
3.3.7.2	Body Mass Properties Design Considerations
5.2.2.1	Physiological Effects of Microgravity

Fluids

13.2.3.1	General Housekeeping Design Requirements

Folding handle control

9.3.3.3.4	Crank Design Requirements

Fonts

9.4.2.2	Visual Display Design Considerations
9.5.3.1.14.1	Font Style Design Requirements
9.6.2.4.2	Design Requirements for Tables

Food

7.2.2.1	Introduction
7.2.2.2.2	Food Acceptability Design Considerations
7.2.2.2.3	Food and Water Quality and Quantity - Design Considerations
10.5.2	Galley and Wardroom Design Considerations

Food identification

10.5.3.2	Food Selection Preparation Consumption-Design Requirements

Food locations

10.5.2	Galley and Wardroom Design Considerations

Food management

8.6.4.1	Skylab Food Management Compartment

Food package attachments

11.12.2	Packaging Design Considerations

Food package sizes

11.12.2	Packaging Design Considerations
11.12.3	Packaging Design Requirements

Food packaging

10.5.3.3 Food Packaging and Stowage Design Requirements
11.12 Packaging

Food packaging design

11.12.2 Packaging Design Considerations

Food rehydration

7.2.2.2.3 Food and Water Quality and Quantity - Design Considerations
10.5.3.3 Food Packaging and Stowage Design Requirements

Food stowage

11.12.3 Packaging Design Requirements

Foot angle

3.3.4.2 Neutral Body Posture Design Considerations

Foot operated switch activation

9.3.3.3.9 Foot-Operated Switch Design Requirements

Foot operated switch location

9.3.3.3.9 Foot-Operated Switch Design Requirements

Foot operated switch use

9.3.3.3.9 Foot-Operated Switch Design Requirements

Foot operated switches

9.3.3.3.9 Foot-Operated Switch Design Requirements

Foot restraint

3.3.3.2.3 Restraint Design Considerations
3.3.3.3.1 Functional Reach Design Requirements

Foot restraint attachments

11.7.2.3.2.1 General Foot Restraint Design Requirements

Foot restraint color

11.7.2.3.2.4 Foot Restraint Durability and Color Design Requirements

Foot restraint doffing

11.7.2.3.2.2 Foot Restraint Donning/Doffing Design Requirements

Foot restraint donning

11.7.2.3.2.2 Foot Restraint Donning/Doffing Design Requirements

Foot restraint durability

11.7.2.3.2.4 Foot Restraint Durability and Color Design Requirements

Foot restraint egress

11.7.2.3.2.2 Foot Restraint Donning/Doffing Design Requirements

Foot restraint loads

11.7.2.3.2.3 Foot Restraint Loads Design Requirements

Foot restraints

11.7.2.2 Personnel Restraints Design Considerations
11.7.2.3.2 Foot Restraint Design Requirements
11.7.2.3.2.1 General Foot Restraint Design Requirements
11.7.2.4 Example Personnel Restraint Design Solutions

Foot wear

11.7.2.3.2.4 Foot Restraint Durability and Color Design Requirements

Form filling

9.6.3.1.8 Data Forms/Form Filling

Format order

9.6.2.8 Design Requirements for Format

Forms

9.6.3.1.8.1 Design Considerations for Data Forms/Form Filling

Forward acceleration

5.3.2.2.2 Subjective Effects of Linear Accelerations

Frequency

9.3.3.5 Speech Transmission Equipment Design Requirements

Function keys

9.3.3.4.1.1 Layout
9.6.3.1.5 Design Requirements for Function Keys

Function reach limits

3.3.3.1 Introduction

Functional area table grouping

9.6.2.4.4.2 Design Requirements for Functional Area Tables

Functional area tables

9.6.2.4.4 Functional Area Tables

Functional arm reach

3.3.3.2.4 Task Type Design Considerations
3.3.3.2.5 Clothing Design Considerations

Functional groups

9.5.3.1.12 Grouped Controls and Displays Design Requirements

Functional reach

3.3.3.2.1 Gravity Condition Design Considerations

Functional reach limits

8.6.3.1 Crew Station Body Envelopes Design Requirements

Fuses

12.3.1.2 Physical Accessibility Design Requirements

Futura font

9.5.3.1.14.1 Font Style Design Requirements

Galactic cosmic radiation

5.7.3.1.2 Sources of Non-Ionizing Radiation

Galactic radiation

5.7.2.1.2.2 Galactic Cosmic Radiation

Galley

10.5 Galley and Wardroom

Galley design

10.5.2 Galley and Wardroom Design Considerations

Games

10.7.2 Recreation Facility Design Considerations

Ganged control knobs

9.3.3.3.1 Knob Design Requirements

Gas connectors

11.10.3.1 Fluid Connectors Design Requirements

Gas embolism

5.1.2.2.1.7.2 Trapped Gas Dysbarism Design Considerations

Gas expansion

6.7.3 Gas expansion

Gas line connectors

12.3.1.3 Visual Access Design Requirements

Gas lines

11.10.3.1 Fluid Connectors Design Requirements

Gastrointestinal effects

5.7.2.1.3.3.2 Gastrointestinal or Precursor Effects

Gauntlet

14.2.4.5 EVA Glove Example Design Solutions

General illumination of SSF

8.13.3.1.1 General Interior Illumination Levels Design Requirements

Geomagnetically trapped radiation

5.7.2.1.2.1 Trapped Radiation Belts

Glare

8.11.2.1 Location of Windows Within Space Module-Design Consideration
8.13.3.2.1 Glare From Light Sources Design Requirements
11.11.2.2 Visual Protection Design Considerations
11.11.2.3 Physical Protection Design Considerations

Glare protection

8.13.3.2.1 Glare From Light Sources Design Requirements

Glazing material

11.11.3.2.1 Material

Globe temperature

5.8.2 Thermal Environment Design Considerations

Gloved operations

9.2.3.2.1 Control Spacing Design Requirements

Graphic changes

9.6.3.3.1.3 Design Requirements for Graphics Editing

Graphical displays

9.6.2.5.2 Design Requirements for Graphics

Graphics

9.6.2.5 Graphics

Graphics editing

9.6.3.3.1.3 Design Requirements for Graphics Editing

Graphics rotation

9.6.3.3.1.3 Design Requirements for Graphics Editing

Graphs

9.6.2.5.1 Design Considerations for Graphics

Grasp

3.3.3.3.1 Functional Reach Design Requirements

Grasp area locations

11.6.3.2 Handle and Grasp Area Location Design Requirements

Grasp areas

11.6 Handles and Grasp Areas (For Portable Items)

Grasp areas

11.6.3 Handle and Grasp Area Design Requirements

Grasping

11.6.3.1 General Handle and Grasp Area Design Requirements

Gray tape

11.7.3.4 Example Equipment Restraint Design Solutions

Grid

9.3.2.2 Computer Input Devices - Design Considerations
9.3.3.4.6 Stylus and Grid Design Requirements

Grid restraints

11.7.2.4 Example Personnel Restraint Design Solutions

Grids

13.2.3.1 General Housekeeping Design Requirements

Grip

11.2.3.1.1 Tool Handgrip Size and Shape Design Requirements

Grip areas

11.9.2 Fastener Design Considerations

Grip force

4.9.3 Strength - Design Requirements

Grooming

10.2.3.5 Grooming and Shaving Design Requirements

Grooming supplies

10.2.3.5 Grooming and Shaving Design Requirements

Grounding

6.4.3.1 Grounding Requirements
11.7.3.3 Equipment Restraint Design Requirements

Group boundary lines

9.5.3.1.12 Grouped Controls and Displays Design Requirements

Group controls identification

9.5.3.1.12 Grouped Controls and Displays Design Requirements

Group restraints

11.7.3.3 Equipment Restraint Design Requirements

Grouped controls

9.5.3.1.12 Grouped Controls and Displays Design Requirements

Grouping

9.6.2.6.1 Design Considerations for Coding
9.6.2.6.2 Design Requirements for Coding

Grouping forms

9.6.3.1.8.2 Design Requirements for Data Forms/Form Filling

Guards

9.3.3.2 Accidental Actuation Design Requirements

Guide pins

12.3.1.4 Removal Replacement and Modularity Design Requirements

HZE particles

5.7.2.1.3.4 Biological Effects of HZE Particles

Habitability

13.2.2 Housekeeping Design Considerations

Habitable volume

8.6.2 Envelope Geometry Design Considerations
8.6.3.2 Total Module Habitable Volume Design Requirements
8.6.4.1 Skylab Food Management Compartment
8.6.4.2 Skylab Sleep Compartment
8.6.4.3 Skylab Waste Management and Personal Hygiene Compartment

Hair

7.2.5.3.1 Body Grooming Design Requirements

Hand actuated fasteners

11.9.2 Fastener Design Considerations
11.9.3.1 General Fastener Design Requirements
11.9.3.2 Hand-Actuated Fastener Design Requirements
11.9.3.4 IVA Fastener Design Requirements

Hand clearance

11.9.2 Fastener Design Considerations

Hand controller

9.3.3.2 Accidental Actuation Design Requirements

Hand operated fasteners

11.9.4 Example Fastener Design Solutions

Hand tools

11.2.3.1.1 Tool Handgrip Size and Shape Design Requirements
11.2.3.1.2 Tool Handedness Design Requirements

Handheld restraint

3.3.3.2.3 Restraint Design Considerations
3.3.3.3.1 Functional Reach Design Requirements

Handhold color

11.8.2.2.2 Handhold and Handrail Coding Design Requirements

Handhold cross-section

11.8.2.2.1 Handhold and Handrail Dimensions Design Requirements

Handhold design

11.8.2.2.4 Handhold and Handrail Design Loads Design Requirements

Handhold dimensions

11.8.2.2.1 Handhold and Handrail Dimensions Design Requirements

Handhold finish

11.8.2.2.3 Handhold and Handrail Finish Design Requirements

Handhold temperature

11.8.2.2.5 Handhold and Handrail Temperature Design Requirements

Handholds

11.7.2.3.2.2	Foot Restraint Donning/Doffing Design Requirements
11.7.2.4	Example Personnel Restraint Design Solutions
11.8.2.1	Handhold and Handrail Design Consideration
11.8.2.2	Handhold and Handrail Design Requirements

Handle covers

11.2.3.1.1	Tool Handgrip Size and Shape Design Requirements

Handle dimensions

11.6.3.4	Handle Dimensions Design Requirements

Handle location

11.6.2	Handle and Grasp Area Design Considerations
11.6.3.2	Handle and Grasp Area Location Design Requirements

Handled items

11.6.3.1	General Handle and Grasp Area Design Requirements

Handles

9.5.3.1.13	Caution and Warning Labels Design Requirements
11.3.3.2	Design Requirements Common to Both Stowage & Equipment Drawers
11.6	Handles and Grasp Areas (For Portable Items)
11.6.3	Handle and Grasp Area Design Requirements

Handrail color

11.8.2.2.2	Handhold and Handrail Coding Design Requirements

Handrail design

11.8.2.2.4	Handhold and Handrail Design Loads Design Requirements

Handrail finish

11.8.2.2.3	Handhold and Handrail Finish Design Requirements

Handrail locks

11.8.2.2.6	Handhold and Handrail Mounting Design Requirements

Handrail temperature

11.8.2.2.5 Handhold and Handrail Temperature Design Requirements

Handrails

11.8.2.1 Handhold and Handrail Design Considerations
11.8.2.2 Handhold and Handrail Design Requirements

Handrails cross-section

11.8.2.2.1 Handhold and Handrail Dimensions Design Requirements

Handwheel turning aids

9.3.3.3.5 Handwheel Design Requirements

Handwheels

9.3.3.3.5 Handwheel Design Requirements

Hardcopies

13.4.2 Information Management Design Considerations

Hardcopy display

9.4.2.3.3.10 Hardcopy Display Design Requirements

Hardware

2.3.2 Standardization Design Requirements
11.0 Hardware and Equipment

Hardware connectors

9.5.3.1.5 Alignment Marks/Interface Identification Design Requirements

Hardware installation

12.3.1.1 General Maintainability Design Requirements

Hardware orientation

9.5.3.1.5 Alignment Marks/Interface Identification Design Requirements

Hatch closing mechanism

8.10.3.3 Opening and Closing Mechanisms Design Requirements

Hatch covers

8.10.3.2 Pressure Hatch Indicator/Visual Display Design Requirements

Hatch force

8.10.3.4 Operating Forces Design Requirements

Hatch opening mechanism

8.10.3.3 Opening and Closing Mechanisms Design Requirements

Hatch opening size

8.10.3.5 Minimum Size Design Requirements

Hatch procedures

8.10.3.2 Pressure Hatch Indicator/Visual Display Design Requirements

Hatch shape

8.10.3.6 Door and Hatch Shape Design Requirements
8.10.4 Hatch and Door Design Solutions

Hatch size

8.10.2 Hatch and Door Design Considerations

Hatch types

8.10.2 Hatch and Door Design Considerations

Hatch windows

11.11.3.1.1 Window Size

Hatches

8.10 Hatches and Doors
8.10.3 Hatch and Door Design Requirements

Hazard

9.5.3.1.13 Caution and Warning Labels Design Requirements

Hazard identification labels

9.5.3.1.13 Caution and Warning Labels Design Requirements

Hazards

6.2.3 General Safety Design Requirements
8.10.3.1 Location Design Requirements
11.2.3.7 Special Tool Features Design Requirements
11.12.3 Packaging Design Requirements
12.3.1.2 Physical Accessibility Design Requirements

Head tilt

3.3.4.2 Neutral Body Posture Design Considerations

Headphones

9.4.3.3.3 Operator Comfort and Convenience Design Requirements

Headsets

9.4.3.3.2 Audio Input/Output Equipment Design Requirements
9.4.4.3.4.1 Audio Alarm Characteristics Design Requirements

Health

7.0 Health Management
8.3.3.2 Non-Adjacent Crew Stations - Design Requirements
13.2.2 Housekeeping Design Considerations

Health care system

10.9.3.2.15.2 Contingency Operation Design Requirements

Health criteria

7.2.6.2 Pre/Post-Mission Health Management - Design Considerations

Health management

7.2.6 Pre/Post-Mission Health Management

Health monitoring

7.2.6.2	Pre/Post-Mission Health Management - Design Considerations
7.2.7	Health Monitoring
7.2.7.2.1	Routine Crew Health Monitoring Design Considerations
7.2.7.3.1	Routine Crew Health Monitoring Design Requirements

Health records

10.9.3.2.1	Data Base and Communications Capability

Health stabilization

7.2.6.2	Pre/Post-Mission Health Management - Design Considerations

Health training

7.2.6.2	Pre/Post-Mission Health Management - Design Considerations

Hearing conservation

5.4.2.4.1	Hearing Conservation Criteria Considerations
5.4.3.2.1	Hearing Conservation Noise Exposure Requirements
5.4.3.2.1.5	Infrasonic Long-Term Annoyance Noise Exposure Requirements

Hearing protection

5.4.3.2.1	Hearing Conservation Noise Exposure Requirement
5.4.3.2.1.1	Wide-Band Long-Term Hearing Conservation Noise Exposure Requirements
5.4.3.2.1.3	Impulse Hearing Conservation Noise Exposure Requirements
5.4.3.2.1.4	Infrasonic Long-Term Annoyance Noise Exposure Requirements
5.4.3.2.1.5	Ultrasonic Long-Term Annoyance Noise Exposure Requirements
5.4.3.2.3.1	Wide-Band Long-Term Annoyance Noise Exposure Requirements
5.4.4.3	Hearing Protection

Heart rate

10.8.3.2	Countermeasure Monitoring Design Requirements

Heat dissipation

5.8.2.2.2	Thermoregulation by the Body - Design Considerations

Heat exchange

5.8.2.2.1	Modes of Heat Exchange - Design Considerations

Heat generation

5.8.2.2.2 Thermoregulation by the Body - Design Considerations

Heat tolerance limits

5.8.2.2.3 Human Performance in Heat - Design Considerations

Heating

10.5.3.2 Food Selection Preparation Consumption-Design Requirements
10.7.2 Recreation Facility Design Considerations

Height

3.2.3.1 Microgravity Effects Design Considerations
3.3.4.2 Neutral Body Posture Design Considerations

Height-to-stroke ratio

9.5.3.1.14.8 Stroke Width Design Requirements

Help

9.6.3.4.6.1 Design Considerations for On-Line Instruction

Help function

9.6.3.4.6.1 Design Considerations for On-Line Instruction
9.6.3.4.7.1 Design Considerations for On-Line Help

Help function access

9.6.3.4.7.2 Design Requirements for On-Line Help

Help function language

9.6.3.4.7.2 Design Requirements for On-Line Help

Help function levels

9.6.3.4.7.2 Design Requirements for On-Line Help

Health care need factors

10.9.2.1 Factors That Determine Health Care Needs-Design Consider.

Hematological effects

5.7.2.1.3.3.3 Hematological Effects

Hidden controls

9.3.3.2 Accidental Actuation Design Requirements

Hierarchy levels

9.6.3.5 Design Requirements for Sequence Control

High force controls

9.3.3.1 General Requirements

High torque fasteners

11.9.3.3 Tool-Actuated Fastener Design Requirements

High torque valves

9.3.3.3.3 Valve Control Design Requirements

Highlighting

9.4.2.3.3.9 Visual Display Terminal (VDT) Design Requirements
9.6.2.6.1 Design Considerations for Coding
9.6.2.6.2 Design Requirements for Coding
9.6.3.1.7.3.2 Design Requirements for Icons
9.6.3.4.2.2 Design Requirements for User Feedback

Hinges

11.5.3.1 General Mounting Design Requirements
11.9.3.1 General Fastener Design Requirements

Holes

6.3.3.4 Holes Requirements

Holistic processing

9.6.2.5.1 Design Considerations for Graphics

Hooks

6.3.3.8 Levers, Cranks, Hooks, and Controls Requirements

Hoses

11.10.3.5 Connector Identification/Alignment Design Requirements

Housekeeping

13.2 Housekeeping
13.2.3 Housekeeping Design Requirements

Housings

11.3.2 Drawer and Rack Design Considerations

Human/workstation configuration

9.2.4 Human/Workstation Configuration

Hygiene

8.2.2.2 Multipurpose Use of Volume - Design Considerations

Hyperbaric facility

10.9.3.2.11 Hyperbaric Treatment Facilities

Hyperbaric treatment

5.1.2.1.3 Mission Related Design Consideration
5.1.3.1 Atmosphere Composition and Pressure Design Requirements

Hyperoxia

5.1.2.2.1.3 Oxygen Toxicity (Hyperoxia) Design Considerations

Hypertext

9.6.3.2.5 Hypertext

Hypertext authoring tools

9.6.3.2.5.2 Design Requirements for Hypertext

Hypertext tools

9.6.3.2.5.1 Design Considerations for Hypertext

Hyphens

9.5.3.1.14.2 Punctuation Design Requirements

Hypobaric decompression sickness

5.1.2.2.1.7.1 Evolved Gas Dysbarism Design Considerations

Hypothermia

5.8.2.2.4 Human Performance in Cold - Design Considerations
6.7.4 Short Duration Exposure

Hypoxia

5.1.2.2.1.1 Hypoxia Design Considerations
5.1.2.2.1.2 Night Vision Abnormalities Design Considerations
6.7.1 Hypoxia
6.7.5 Vaporization of Tissue Fluids

IVA

14.1.2.1 EVA Compared to IVA and Alternative Approaches

IVA mobility aids

8.9.2.1 Location of IVA Mobility Aids Design Considerations

IVA translation rates

8.7.2.2 IVA Translation Rates Design Considerations

Icons

9.6.3.1.7.3 Icons
9.6.3.1.7.3.2 Design Requirements for Icons

Illness

7.3.2.2 Anticipated Illnesses and Injuries - Design Considerations

Illumination

9.4.2.3.1.1	Illumination Design Requirements
9.4.2.3.3.7	Digital Display Design Requirements
13.2.3.2	Surface Cleaning Design Requirements
13.4.3.2	Hardcopy Information Management Design Requirements

Illumination levels

8.13.3.1.3	Illumination Levels of Sleeping Areas Design Requirements

Imaging lighting

8.13.3.5	Medical Lighting Requirements

Impact acceleration

5.3.2.1	Acceleration Environments
5.3.2.1.3	Impact Acceleration Environments
5.3.2.4	Human Responses to Impact Accelerations
5.3.3.3	Impact Acceleration Design Requirements

Impact acceleration factors

5.3.2.4	Human Responses to Impact Accelerations

Impact acceleration limits

5.3.3.3	Impact Acceleration Design Requirements

Impact loads

11.11.3.4	Physical Protection Design Requirements

Impact noise

5.4.2.4.1.2	Short-Term Hearing Conservation Criteria Considerations

Impact survival

5.3.2.4	Human Responses to Impact Accelerations

Impulse noise

5.4.3.2.3.4	Impulse Annoyance Noise Exposure Requirements

Impulse sound

5.4.3.2.1.3 Impulse Hearing Conservation Noise Exposure Requirements

Inaccessible areas

11.4.4 Example Closures and Covers Design Solutions

Inclusions

11.11.2.1 Optical Characteristics Design Considerations
11.11.3.1.6 Bubbles and Seeds

Incoherent ultraviolet light

5.7.3.1.3 Human Responses to Non-Ionizing Radiation

Incoherent ultraviolet optical radiation exposure limit

5.7.3.2.1 Non-Ionizing Radiation Exposure Limits

Indicator contrast

9.4.2.3.1.2 Display Contrast Design Requirements

Indicator illumination

9.4.2.3.3 Display Types

Indicator lights

9.4.2.3.3.8 Light Emitting Diode (LED) Design Requirements
9.4.4.3.3 Visual Caution and Warning Display Design Requirements

Indicators

9.4.2.3.3 Display Types

Indirect lighting

8.13.3.2.1 Glare From Light Sources Design Requirements

Indirect voice communication

5.4.2.4.2.2 Indirect Voice Communications Criteria Considerations
5.4.3.2.2.2 Indirect Voice Communications Noise Exposure Requirements

Individual crew items

9.5.3.1.9 Stowage Container Labeling Design Requirements

Individual crew quarters

10.4.3 Individual Crew Quarters Design Requirements

Individual restraints

11.7.3.3 Equipment Restraint Design Requirements

Infections

10.2.2 Personal Hygiene Design Considerations

Informal restraints

11.7.2.2 Personnel Restraints Design Considerations

Information

9.4.2.3.2 Information Presentation Design Requirements
9.6.2.1 Design Considerations for Data Display
9.6.4.4 Design Requirements for Interactive Control

Information display rate

9.6.2.9 Information Display Rate
9.6.2.9.2 Design Requirements for Information Display Rate

Information input techniques

9.2.5.1.1 Window Workstation Design Considerations

Information management

13.4 Information Management
13.4.3 Information Management Design Requirements

Information output techniques

9.2.5.1.1 Window Workstation Design Considerations

Information systems

12.3.3 Maintenance Information Management Systems Design Requirements

Infrared

11.11.3.1.4 Optical Density
11.11.3.3 Visual Protection Design Requirements

Infrared radiation

5.7.3.1.3 Human Responses to Non-Ionizing Radiation

Infrasonic noise

5.4.2.2 Propagation of Noise - Design Considerations
5.4.3.2.1.4 Infrasonic, Long-Term Annoyance Noise Exposure Requirements

Infrasound sound pressure levels

5.4.3.2.1.4 Ifrasonic, Long-Term Noise Exposure Requirements

Injection equipment

10.9.3.2.10 Intravenous Fluid Injection Supplies and Equipment

Input consequences

9.6.4.2 Design Requirements for User Input

Input devices

9.3.3.4 Computer Input Devices
9.6.4.2 Design Requirements for User Input

Input rejection

9.6.3.4.2.2 Design Requirements for User Feedback

Insert mode

9.6.3.3.1.2 Design Requirements for Editing

Installation

11.5 Mounting Hardware
12.2 Design for Maintainability - Design Considerations

Instruction titles

9.5.3.1.8 Operating Instruction Design Requirements

Instructions

9.6.4.3 Design Requirements for Data Entry Design
11.4.3 Closures and Covers Design Requirements

Insulation

6.4.3.3.7 Insulation Requirements
6.4.3.3.8 Power cords Requirements

Intelligibility

5.4.2.4.2 Voice Communications Criteria Considerations
5.4.3.2.2.2 Indirect Voice Communications Noise Exposure Requirements

Inter-individual variations

3.2.3.2 Inter-Individual Variation Design Considerations

Interaction with windows

9.6.3.1.7.5 Interactions with Windows

Interactive control

9.6.4.4 Design Requirements for Interactive Control

Interactive windows

9.6.3.1.7.5.1 Design Considerations for Interactions with Windows

Interchangeable components

9.2.2.1.2 Generic Workstation Design Considerations

Interface identification

9.5.3.1.5 Alignment Marks/Interface Identification Design Requirements
9.5.3.1.5 Alignment Marks/Interface Identification Design Requirements

Interior design

8.12 Interior Design and Decor

Interlocks

6.4.3.4 Interlocks Requirements

Intermediate torque valves

9.3.3.3.3 Valve Control Design Requirements

Intermittent noise

5.4.3.2.3.3 Wide-Band Short Term Annoyance Noise Exposure Requirements

Interrupted vibration

5.5.3.3.4 Vibration Duration

Introduction

1.4.1 Generic Topical Organization

Instruction categories

9.5.3.1.8 Operating Instruction Design Requirements

Inventory

10.5.3.2 Food Selection Preparation Consumption-Design Requirements
13.3.2 Inventory Control Design Considerations

Inventory control

13.3 Inventory Control

Inventory control reports

13.3.3.2 Inventory Control Reports Requirements

Inventory location status

13.3.3.2 Inventory Control Reports Requirements

Inventory transfer status

13.3.3.2 Inventory Control Reports Requirements

Iodine

7.2.7.3.2.3 Microbiological Monitoring & Treatment - Design Requirements

Ionizing radiation effects

5.7.2.1.3.3.4 Skin Tissue Effects

Ionizing radiation

5.7.2 Ionizing Radiation

Ionizing radiation exposure limits

5.7.2.2.1 Ionizing Radiation Exposure Limits

Ionizing radiation sources

5.7.2.1.2 Sources of Ionizing Radiation

Ionizing radiation types

5.7.2.1.1 Types of Ionizing Radiation

Isolation valves

12.3.1.4 Removal Replacement and Modularity Design Requirements

Isometric joystick

9.3.3.4.2 Joysticks Design Requirements
9.3.3.4.2 Joysticks Design Requirements

Isotonic strength

10.8.3.1.1 Exercise Equipment

Italics

9.5.3.2 Coding Design Requirements

Jet noise

5.4.2.1.1 Launch Phase Acoustic Environment

Joint motion

3.3.2 Joint Motion

Joint motion capability

3.3.2.2.1 Application of Data Design Considerations
3.3.2.2.3 Gravity Environment Design Considerations

Joint movement ranges

3.3.2.2.2 Multi-Joint Versus Single Joint Data Design Considerations
3.3.2.3.1 Joint Motion Data For Single Joint Design Requirements

Joysticks

9.3.2.2 Computer Input Devices - Design Considerations

Junction boxes

11.14.2 Cable Management Design Considerations

Justification

9.6.3.2.1 Design Requirements for Position Designation (Cursor)
9.6.2.3.2 Design Requirements for Text

Key control

9.3.2.2 Computer Input Devices - Design Considerations

Key legend

9.3.3.4.1.2 General

Key noise

9.3.3.4.1.2 General

Key operated activation

9.3.3.3.17 Key-Operated Switch Design Requirements

Key operated displacement

9.3.3.3.17 Key-Operated Switch Design Requirements

Key operated shape

9.3.3.3.17 Key-Operated Switch Design Requirements

Key operated switch

9.3.3.3.17 Key-Operated Switch Design Requirements

Key operated switch color

9.3.3.3.17 Key-Operated Switch Design Requirements

Keyboard

9.3.3.4.1 Keyboard Design Requirements
9.3.3.4.1.2 General
9.3.3.4.4 Mouse Design Requirements
9.3.3.4.5 Track Ball (Rolling Ball) Design Requirements
9.3.3.4.7 Touch-Sensitive Display Design Requirements

Keyboard commands

9.6.3.1.4 Design Requirements for Command Keystrokes

Keyboard layout

9.3.3.4.1.1 Layout

Keying

11.10.3.5 Connector Identification/Alignment Design Requirements

Keys

9.3.3.4.1.1 Layout
9.3.3.4.1.2 General
9.6.4.4 Design Requirements for Interactive Control
11.10.4 Example Connector Design Solutions

Keystone effect

9.4.2.3.3.2 Large Screen Display Design Requirements

Keystroke echo

9.6.2.9.2 Design Requirements for Information Display Rate

Kinematics

4.9.2 Strength - Design Considerations

Kinesthesia

4.6	Kinesthesia
4.6.2	Kinesthetic Design Considerations

Kneading

10.5.3.3	Food Packaging and Stowage Design Requirements

Knobs

9.3.3.3.1	Knob Design Requirements

Label design

9.5.3.1.2	Readability Design Requirements

Label location

9.5.3.1.3	Display Label Placement Design Requirements

Label orientation

9.5.3.1.3	Display Label Placement Design Requirements

Label readability

9.5.3.1.2	Readability Design Requirements

Labeling

9.5	Labeling and Coding
10.12.3	Stowage Facility Design Requirements

Labeling categories

9.5.3.1.1	Labeling Standardization Design Requirements

Labeling factors

9.5.2	Labeling and Coding Design Considerations

Labeling standardization

9.5.3.1.1	Labeling Standardization Design Requirements

Labels

9.6.2.4.1	Design Considerations for Tables
9.6.2.4.2	Design Requirements for Tables
9.6.2.4.3.2	Design Requirements for Matrix Tables
9.6.2.8	Design Requirements for Format
11.2.3.5	Tool Labeling and Identification Design Requirements
11.3.3.3	Stowage Drawer Design Requirements
11.6.3.1	General Handle and Grasp Area Design Requirements
11.9.3.1	General Fastener Design Requirements
11.9.3.3	Tool-Actuated Fastener Design Requirements
11.10.3.5	Connector Identification/Alignment Design Requirements
11.10.4	Example Connector Design Solutions
11.12.3	Packaging Design Requirements
11.14.3	Cable Management Design Requirements
12.3.1.3	Visual Access Design Requirements
12.3.1.4	Removal Replacement and Modularity Design Requirements
12.3.2.2	Test Point Design Requirements

Lamp replacement

9.4.2.3.4	Display Maintenance Design Requirements

Lamp safety

9.4.2.3.4	Display Maintenance Design Requirements

Lamp testing

9.4.2.3.3.8	Light Emitting Diode (LED) Design Requirements

Lamp tests

9.4.2.3.4	Display Maintenance Design Requirements

Large screen display

9.4.2.3.3.2	Large Screen Display Design Requirements

Laser exposure limits

5.7.3.2.1	Non-Ionizing Radiation Exposure Limits

Laser light

11.11.2.2	Visual Protection Design Considerations

Lasers

5.7.3.1.4 Non-Ionizing Radiation Protection Design Considerations

Latches

6.3.3.5 Latches Requirements
11.3.3.2 Design Requirements Common to Both Stowage & Equipment Drawers
11.9.3.2 Hand-Actuated Fastener Design Requirements

Latching mechanism

11.7.2.3.3.1 Body Restraint Donning/Doffing Design Requirements

Latent effects of radiation dose

5.7.2.1.3.2 Late Effects of Ionizing Radiation

Lateral acceleration

5.3.2.2.2 Subjective Effects of Linear Accelerations

Launch atmosphere

5.1.2.1.3 Mission Related Design Considerations

Launch phase noise

5.4.2.1.1 Launch Phase Acoustic Environment

Launch phase vibration

5.5.2.1.1 Launch Phase Vibration Environment

Launch vibration limits

5.5.3.2.1 Severe Discomfort Boundary
5.5.3.3.2 Vibration Exposure Limit

Laundry

10.10.2 Laundry Facility Design Considerations
11.13.1.2.2 Disposable vs Reusable Clothing

Laundry distribution

10.10.3 Laundry Facility Design Requirements

Laundry facility

10.10 Laundry facility

Laundry soap

10.10.3 Laundry Facility Design Requirements

Layered windows

9.6.3.1.7.5.1 Design Considerations for Interactions with Windows
9.6.3.1.7.5.2 Design Requirements for Interactions with Windows

Leak current exposure

6.4.3.18.1 Chassis Leak Current Requirements

Leg float

11.7.2.3.4 Sleep Restraints Design Requirements

Leg placement

3.3.4.2 Neutral Body Posture Design Considerations

Leg restraints

11.7.2.4 Example Personnel Restraint Design Solutions

Leg strength

4.9.3 Strength - Design Requirements

Legend lights

9.4.2.3.3.3 Legend Light Design Requirements

Legend switch activation

9.3.3.3.15 Legend Switch Design Requirements

Legend switch barrier height

9.3.3.3.15 Legend Switch Design Requirements

Legend switch detent

9.3.3.3.15 Legend Switch Design Requirements

Legend switch dimension

9.3.3.3.15 Legend Switch Design Requirements

Legend switch displacement

9.3.3.3.15 Legend Switch Design Requirements

Legend switch resistance

9.3.3.3.15 Legend Switch Design Requirements

Legend switches

9.3.3.3.15 Legend Switch Design Requirements
9.4.2.3.3 Display Types

Legends

9.4.2.3.3.6 Flag Display Design Requirements

Leisure activities

10.7.2 Recreation Facility Design Considerations

Letters

9.5.3.1.14.7 Character Width Design Requirements

Levers

6.3.3.8 Levers Cranks Hooks and Controls Requirements
9.3.3.3.6 Lever Design Requirements
9.5.3.1.13 Caution and Warning Labels Design Requirements

Light

4.2.2 Vision - Design Considerations

Light controls

8.13.3.4 Lighting Fixtures and Controls Design Requirements

Light distribution

8.13.2.4 Light Distribution Design Considerations
8.13.3.2 Light Distribution Design Requirements
8.13.3.6 Workstation Illumination Design Requirements

Light emitting diode

9.4.2.3.3.8 Light Emitting Diode (LED) Design Requirements

Light fixtures

8.13.3.4 Lighting Fixtures and Controls Design Requirements

Light flashes

4.2.2 Vision - Design Considerations

Light intensity

8.13.2.2 Lighting Intensity Design Considerations

Light level

8.13.2.2 Lighting Intensity Design Considerations

Light pen

9.3.2.2 Computer Input Devices - Design Considerations
9.3.3.4.3 Light Pen Design Requirements

Light positioning

8.13.2.5 Characteristics of Task Materials Design Considerations

Light source

8.13.3.2.1 Glare From Light Sources Design Requirements
8.13.3.2.2 Reflected Glare Design Requirements
8.13.2.3 Placement of Sources Design Considerations
8.13.2.5 Characteristics of Task Materials Design Considerations

Lighting

8.2.3.6 Decor and Lighting
8.3.2.1 General Adjacency Design Considerations
8.5.3.3 Location & Orientation By Color Coding Design Requirements

8.6.2.2 Visual Design Considerations
8.11.2.1 Location of Windows Within Space Module-Design Consideration
8.12.2.2 Decorative Technique Design Considerations
8.12.2.3 Psychological Effects Design Considerations
8.13 Lighting
9.4.2.3.1.1 Illumination Design Requirements
9.4.2.3.3.2 Large Screen Display Design Requirements
10.2.3.4 Hair Cutting Design Requirements
10.2.3.5 Grooming and Shaving Design Requirements
10.5.3.1 Overall Galley and Wardroom Layout - Design Requirements
10.6.2 Meeting Facility Design Considerations
10.6.3 Meeting Facility Design Requirements
10.9.3.1 Medical Communications/Computing Design Requirements
13.2.3.3 Vacuum Cleaning Design Requirements

Lighting level

8.13.3.1.2 Illumination For Specific Tasks Design Requirements
8.13.3.1.3 Illumination Levels of Sleeping Areas Design Requirements

Lighting measurement

8.13.3.1.2 Illumination For Specific Tasks Design Requirements

Lighting psychological factors

8.13.2.7 Psychological Factors Design Considerations

Limit stops

12.3.1.2 Physical Accessibility Design Requirements

Limitations

1.3 Scope Precedence and Limitations

Line length

9.6.3.2.1 Design Requirements for Position Designation (Cursor)

Line of sight

9.2.4.2.2 Visual Space Design Requirements
11.11.2.1 Optical Characteristics Design Considerations

Line spacing

9.5.3.1.14.10	Spacing Design Requirements
9.6.3.2.1	Design Requirements for Position Designation (Cursor)

Linear acceleration

5.3.2.1	Acceleration Environments
5.3.2.1.1	Linear Acceleration Environments
5.3.2.2	Human Responses to Linear Acceleration
5.3.2.2.2	Subjective Effects of Linear Accelerations
5.3.2.2.3	Specific Effects of Linear Accelerations
5.3.3.1	Linear Acceleration Design Requirements

Linear acceleration factors

5.3.2.2.1	Factors Affecting Human Acceleration Tolerance

Linear acceleration limits

5.3.3.1	Linear Acceleration Design Requirements

Linear acceleration tolerance

5.3.2.2.1	Factors Affecting Human Acceleration Tolerance

Linear energy transfer

5.7.2.1.3.1	Units of Measure Used to Describe Human Responses to IO

Linear scale

9.4.2.3.3.4	Scales and Pointers Design Requirements

Liquid connectors

11.10.3.1	Fluid Connectors Design Requirements

Liquid lines

11.10.3.1	Fluid Connectors Design Requirements

Loads

11.7.3.3	Equipment Restraint Design Requirements
11.9.3.2	Hand-Actuated Fastener Design Requirements

Local vertical

8.4.2 Orientation Design Considerations

Location code users

8.5.2.1 Users of A Location Coding System Design Considerations

Location coding

8.5 Location coding
8.5.2.2 Location Coding System Implementation-Design Considerations
8.5.3.3 Location & Orientation By Color Coding Design Requirements
9.5.3.1.7 Location and Orientation Coding Design Requirements

Location coding placards

8.5.3.4 Location Coding With Placards Design Requirements

Location maps

9.5.3.1.7 Location and Orientation Coding Design Requirements

Locks

11.6.3.3 Nonfixed Handles Design Requirements

Long flights

5.1.2.1.3 Mission Related Design Considerations

Long term hearing

5.4.3.2.1.2 Narrow-Band Long-Term Hearing Conservation Noise Exposure Requirements

Long term noise

5.4.2.4.1.1 Long-Term Hearing Conservation Criteria Considerations
5.4.2.4.3.1 Long-Term Annoyance Noise Criteria Considerations
5.4.3.2.1.1 Wide-Band Long-Term Hearing Conservation Noise Exposure Requirements
5.4.3.2.3.1 Wide-Band Long-Term Annoyance Noise Exposure Requirements

Longitudinal vibration

5.5.3.2.1 Severe Discomfort Boundary
5.5.3.2.2 Decreased Proficiency Boundary
5.5.3.2.3 Reduced Comfort Boundary

5.5.3.3.1 Fatigue-Decreased Proficiency Boundary
5.5.3.3.2 Vibration Exposure Limit

Longitudinal vibration acceleration exposure

5.5.3.3.3 Reduced Comfort Boundary

Loose restraints

11.7.3.3 Equipment Restraint Design Requirements

Loudspeakers

9.4.3.3.2 Audio Input/Output Equipment Design Requirements

Low frequency noise

5.4.2.2 Propagation of Noise - Design Considerations

Low frequency radiation

5.7.3.1.1 Types of Non-Ionizing Radiation

Low level lighting

8.13.3.1.4 Illumination Levels for Dark Adaptation Design Requirements

Low temperature

6.7.4 Short Duration Exposure

Low torque fasteners

11.9.3.3 Tool-Actuated Fastener Design Requirements

Low torque valves

9.3.3.3.3 Valve Control Design Requirements

Lower case letters

9.5.3.1.14.3 Upper/Lower Case Design Requirements
9.6.3.2.1 Design Requirements for Position Designation (Cursor)
9.6.2.3.2 Design Requirements for Text

Luminance

9.4.2.2	Visual Display Design Considerations
9.4.2.3.1.1	Illumination Design Requirements
9.4.2.3.3.2	Large Screen Display Design Requirements
9.4.2.3.3.9	Visual Display Terminal (VDT) Design Requirements

Luminance contrast

9.4.2.3.3.6	Flag Display Design Requirements

Luminance control

9.2.5.1.2	Window Workstation Design Requirements

Luminance ratio

8.13.3.2.1	Glare From Light Sources Design Requirements
8.13.3.2.3	Brightness Ratio Design Requirements
9.4.2.3.3.2	Large Screen Display Design Requirements
14.4.3.3	EVA Workstation Lighting Design Requirements

Luminous displays

8.13.2.4	Light Distribution Design Considerations

MSIS relational database

1.5	Standards Database (TBD)

Macros

9.6.3.1.10.1	Design Considerations for User-definable Macros
9.6.3.1.10.2	Design Requirements for User-definable Macros

Magnetic fields

5.7.3.1.2	Sources of Non-Ionizing Radiation

Maintainability

12.0	Design for Maintainability

Maintainability design

12.3	Design for Maintainability - Design Requirements

Maintenance

8.12.2.1 General Interior Decor Design Considerations
8.12.3.4 Decor Cleaning and Maintenance
9.2.3.2.6 Maintenance Controls/Displays Design Requirements
12.3.3 Maintenance Information Management Systems Design Requirements

Maintenance data display

9.2.5.2.1 Maintenance Workstation Design Considerations

Maintenance displays

9.4.2.3.3.1 Maintenance Display Design Requirements

Maintenance equipment

12.3.1.1 General Maintainability Design Requirements

Maintenance information

12.3.3 Maintenance Information Management Systems Design Requirements

Maintenance support

12.3.1.1 General Maintainability Design Requirements

Maintenance workstation

9.2.5.2 Maintenance Workstation
9.2.5.2.2 Maintenance Workstation Design Requirements

Male pins

11.10.3.2 Electrical Connectors Design Requirements

Managing hardcopy

9.2.5.2.1 Maintenance Workstation Design Considerations

Manipulating data

9.6.3.3 Design Requirements for Manipulating Data

Manipulator foot restraint

14.7.4.3 Manipulator Foot Restraint (MFR)

Manmade radiation sources

5.7.2.1.2.4 Onboard Radiation Sources

Manned maneuvering unit

14.7.4.1 Manned Maneuvering Unit (MMU)

Manual access

12.3.1.3 Visual Access Design Requirements

Manual disable

9.4.3.3.1 General Design Requirements
12.3.2.1 Fault Detection and Isolation Design Requirements

Manual tools

11.2.4.1 Example Manual Tools

Map

9.6.2.5.2 Design Requirements for Graphics

Margins

9.6.3.2.1 Design Requirements for Position Designation (Cursor)

Marking devices

9.5.3.1.11 Contingency Labels and Marking Devices Design Requirements

Marking readability

9.5.3.1.2 Readability Design Requirements

Masking noise

5.4.3.2.3.4 Impulse Annoyance Noise Exposure Requirements

Mass

3.2.3.1 Microgravity Effects Design Considerations
4.6.2 Kinesthetic Design Considerations

Mass handling

4.7.2 Reaction Time - Design Considerations

Mass shielding

5.7.2.1.4.1 Mass Shielding

Master alarm light

9.4.4.3.3 Visual Caution and Warning Display Design Requirements

Matrix table arrangement

9.6.2.4.3.2 Design Requirements for Matrix Tables

Matrix tables

9.6.2.4.3 Matrix Tables

Meal schedule

7.2.2.2.2 Food Acceptability Design Considerations

Meals

7.2.2.3.1 Food - Design Requirements
10.5.2 Galley and Wardroom Design Considerations

Mechanical displays

9.4.2.2 Visual Display Design Considerations

Mechanical energy

6.3.3.10 Mechanically Stored Energy Requirements
6.3.3.10 Mechanically Stored Energy Requirements

Mechanical energy hazards

6.3.3.10 Mechanically Stored Energy Requirements

Mechanical hazards

6.3.2 Mechanical Hazards Design Considerations
6.3.3 Mechanical Hazards Design Requirements

Mechanical protrusions

6.3.2 Mechanical Hazards Design Considerations

Mechanical surfaces

6.3.2 Mechanical Hazards Design Considerations

Mechanical transfer aids

11.8.3.1 Equipment Mobility Aid Design Considerations

Mechanical vibration

5.5.2.2 Vibration Propagation Design Considerations

Medical care

7.3 Medical care
7.3.3 Medical Care - Design Requirements

Medical care facility

7.3.2.1 Objectives of Medical Care - Design Considerations

Medical communications

10.9.3.1 Medical Communications/Computing Design Requirements

Medical computing

10.9.3.1 Medical Communications/Computing Design Requirements

Medical equipment

10.9.3.2.13 Central Supply

Medical facility

7.3.2.3 Earth- versus Space-Based Medical Care-Design Considerations
7.3.3.1 General Design Requirements
7.3.3.2 Prevention - Design Requirements
7.3.3.3 Diagnosis - Design Requirements

Medical facility link

10.8.3.2 Countermeasure Monitoring Design Requirements

Medical life support

10.9.3.2.4 Advanced Life Support

Medical lighting

8.13.3.5 Medical Lighting Requirements

Medical stabilization

7.3.3.4 Treatment (Therapeutics) Design Requirements

Medical supplies inventory

10.9.3.2.1 Data Base and Communications Capability

Medical team

7.3.2.3 Earth- versus Space-Based Medical Care-Design Considerations

Medical training

7.3.2.3 Earth- versus Space-Based Medical Care-Design Considerations
10.9.2.3 Crewmember Skills - Design Considerations

Medical treatment

7.3.3.4 Treatment (Therapeutics) Design Requirements

Meeting facility

10.6 Meeting Facility

Meeting facility design

10.6.3 Meeting Facility Design Requirements

Meeting facility equipment

10.6.2 Meeting Facility Design Considerations

Meeting facility furnishings

10.6.3 Meeting Facility Design Requirements

Meeting facility location

10.6.2 Meeting Facility Design Considerations

Meeting facility size

10.6.2 Meeting Facility Design Considerations
10.6.3 Meeting Facility Design Requirements

Memorization

9.6.4.3 Design Requirements for Data Entry Design

Memory

9.6.2.1 Design Considerations for Data Display

Menses

10.3.3.2 Facilities for Other Waste Products Design Requirements

Menstruation

7.2.5.3.1 Body Grooming Design Requirements

Menu activation

9.6.3.1.6.4.2 Design Requirements for User-Requested Menus

Menu design

9.6.3.1.6.4.2 Design Requirements for User-Requested Menus

Menu formats

9.6.3.1.6.2 Design Requirements for Menus

Menu items

9.6.3.1.6.1 Design Considerations for Menus
9.6.3.1.6.2 Design Requirements for Menus
9.6.3.1.6.3.2 Design Requirements for Permanent Menus

Menus

9.6.3.1.6 Menus

Messages

9.6.3.4.3.1 Design Considerations for System Status Messages

Metabolic response

5.1.2.1.4.1 Metabolic Factors Design Considerations

Meter bezels

9.2.2.2.4 Workstation Color Design Requirements

Microbial contaminant monitoring

7.2.7.3.3 Environmental Monitoring Design Requirements

Microbial decontamination

5.3.4.1 Microbiological contamination
5.1.2.3.2 Atmosphere Microbiological Monitoring Design Considerations

Microbiological monitoring

5.1.3.4 Atmosphere Microbiological Monitoring & Control Design Requirements
7.2.7.2.2.2 Microbiological Monitoring Design Considerations

Microgravity

5.2 Microgravity

Microgravity controls

9.3.3.1 General Requirements

Microgravity countermeasures

10.8 Microgravity countermeasures Facility
10.8.4 Example Microgravity Countermeasures Design Solution

Microgravity countermeasures equipment

10.8.3.1 Microgravity Countermeasures Equipment/Supplies Design Requirements

Microgravity countermeasures facility

10.8.2 Microgravity Countermeasure Facility Design Considerations

Microgravity countermeasures supplies

10.8.3.1 Microgravity Countermeasures Equipment/Supplies Design Requirements

Microgravity effects

3.2.3.1 Microgravity Effects Design Considerations
3.3.1.2 Body Size Design Considerations
5.2.2 Microgravity Design Considerations
5.2.2.1 Physiological Effects of Microgravity
5.8.2.2.2.1 Microgravity Effects on the Thermal Environment

Microphone

9.3.3.5 Speech Transmission Equipment Design Requirements
9.4.3.3.2 Audio Input/Output Equipment Design Requirements
9.4.3.3.3 Operator Comfort and Convenience Design Requirements

Miniature controls

9.3.3.1 General Requirements

Missing items

9.6.3.1.8.2 Design Requirements for Data Forms/Form Filling

Mission duration

8.6.2 Envelope Geometry Design Considerations
8.6.2.1 Mission Duration Design Considerations
10.2.2 Personal Hygiene Design Considerations
10.4.2 Individual Crew Quarters Design Considerations
10.8.2 Microgravity Countermeasure Facility Design Considerations

Mistakes

9.6.2.1 Design Considerations for Data Display

Mixing

10.5.3.3 Food Packaging and Stowage Design Requirements

Mnemonics

9.6.4.3 Design Requirements for Data Entry Design

Mobility

3.1.1 Scope
5.2.2.2 Sleeping Eating and Mobility Changes in Microgravity

Mobility aid location

8.9.4 Example of IVA Restraints Arch Integration Design Solutions

Mobility aid locations

8.9.3.1 IVA Mobility Aid Integration Design Requirements

Mobility aid size

8.9.3.1 IVA Mobility Aid Integration Design Requirements

Mobility aid substitutes

8.9.2.1 Location of IVA Mobility Aids Design Considerations

Mobility aid use

8.9.2.1 Location of IVA Mobility Aids Design Considerations

Mobility aids

8.7.2.3 Equipment Transfer Design Considerations
8.9 Mobility Aids and Restraints Architectural Integration
9.2.4.2.3 Workstation Restraints and Mobility Aid Design Requirements
11.8 Mobility aids
11.12.3 Packaging Design Requirements

Module layout

8.2.2.4 Module Layout and Arrangement Design Considerations

Moisture protection

6.3.3.9 Burrs Requirements

Moments of inertia

3.3.7.3.3.1 Whole-Body Moment of Inertia Data Design Requirements
3.3.7.3.3.2 Body Segments Moment of Inertia Data Design Requirements

Monitoring

10.8.3.2 Countermeasure Monitoring Design Requirements

Motion sickness

4.5.2.2 Space Adaptation Syndrome

Motivation

7.2.3.3.2.2 Deconditioning Countermeasure Design Considerations

Motor skills

4.8 Motor Skills (Coordination)

Mounting

11.5 Mounting Hardware
11.8.2.2.6 Handhold and Handrail Mounting Design Requirements
12.3.1.1 General Maintainability Design Requirements

Mounting hardware

11.5.2 Mounting Hardware Design Considerations
11.5.3 Mounting Hardware Design Requirements

Mouse

9.3.2.2 Computer Input Devices - Design Considerations
9.3.3.4.4 Mouse Design Requirements

Mouse surface

9.3.3.4.4 Mouse Design Requirements

Movable equipment

11.8.3.2 Equipment Mobility Aid Design Requirements

Movable items

11.6.2 Handle and Grasp Area Design Considerations

Movement acceleration

9.2.3.2.4 Preferred Control/Display Location Design Requirements

Movement ranges

3.3.2.2.2 Multi-Joint Versus Single Joint Data Design Considerations

Moving graphics

9.6.3.3.1.3 Design Requirements for Graphics Editing

Moving scale

9.4.2.3.3.4 Scales and Pointers Design Requirements

Multi-g controls

9.3.3.1 General Requirements

Multi-observer window

9.2.5.1.2 Window Workstation Design Requirements

Multi-quantity items

9.5.3.1.6 Equipment Identification Design Requirements

Multimonitors

9.6.4.4 Design Requirements for Interactive Control

Multipanes

11.11.3.1.3 Optical Characteristics

Multiple dialogues

9.6.3.1.2 Design Requirements for User-Computer Dialogues

Multiple windows

9.6.2.7.1 Design Considerations for Windows
9.6.2.7.2 Design Requirements for Windows

Multitasking

9.6.4.4 Design Requirements for Interactive Control

Muscle strength

10.8.3.1 Microgravity Countermeasures Equipment/Supplies Design Requirements
10.8.3.2 Countermeasure Monitoring Design Requirements

Muscular tension

11.7.2.3.1 General Personnel Restraints Design Requirements

Nails

7.2.5.3.1 Body Grooming Design Requirements

Name plates

9.5.3.1.6 Equipment Identification Design Requirements

Narrow band hearing

5.4.3.2.1.2 Narrow-Band, Long-Term Hearing Conservation Noise Exposure Requirement

Narrow band noise

5.4.2.4.1.1.2 Narrow-Band, Long-Term Hearing Conservation Considerations
5.4.3.2.3.2 Narrow-Band, Annoyance Noise Exposure Requirements

Nasal congestion

4.4.2.1 Olfaction

Neutral body posture

3.2.3.1 Microgravity Effects Design Considerations
3.3.3.2.2 Body Posture Design Considerations
3.3.4 Neutral Body Posture
8.11.2.2 Window Configuration Design Considerations
9.2.4.2.3 Workstation Restraints and Mobility Aid Design Requirements

Night vision

5.1.2.2.1.2 Night Vision Abnormalities Design Considerations

No hands input/output

9.2.5.2.1 Maintenance Workstation Design Considerations

Noise

4.3.2.2	Noise Design Considerations
8.3.2.1	General Adjacency Design Considerations
8.3.2.2	Specific Adjacency Design Considerations
10.4.3	Individual Crew Quarters Design Requirements
10.5.3.1	Overall Galley and Wardroom Layout - Design Requirements
10.6.2	Meeting Facility Design Considerations
10.8.3.4	Exercise Environment Design Requirements
10.9.3.1	Medical Communications/Computing Design Requirements
10.10.2	Laundry Facility Design Considerations
13.2.2	Housekeeping Design Considerations
13.2.3.3	Vacuum Cleaning Design Requirements

Noise annoyance

5.4.2.3.3	Annoyance Effects of Noise
5.4.2.4.3	Annoyance Criteria Considerations
5.4.2.4.3.2	Short-Term Annoyance Noise Criteria Considerations
5.4.2.4.3.1	Long-Term Annoyance Noise Criteria Considerations

Noise cancelling microphones

9.3.3.5	Speech Transmission Equipment Design Requirements

Noise control

5.4.4	Example Acoustics Design Solutions
5.4.4.1	Noise Control at the Source

Noise damage

4.3.2.2	Noise Design Considerations
5.4.2.3	Human Responses to Noise - Design Considerations

Noise environment

5.4.3	Acoustics Design Requirements

Noise exposure

5.4.2.4.1	Hearing Conservation Criteria Considerations

Noise exposure limits

5.4.2	Acoustics Design Considerations
5.4.2.3.1	Physiological Effects of Noise

5.4.2.4 Noise Exposure Limits Considerations
5.4.3.2.1 Hearing Conservation Noise Exposure Requirements

Noise interference

5.4.2.3.2 Performance Effects of Noise

Noise level criteria

5.4.3.2.2.1 Direct Voice Communications Noise Exposure Requirements

Noise levels

5.4.2.1 Acoustic Environments - Design Considerations
5.4.2.3.3 Annoyance Effects of Noise
5.4.3 Acoustics Design Requirements
5.4.3.2.1.1 Wide-Band Long-Term Hearing Conservation Noise Exposure Requirements
5.4.3.2.1.3 Wide-Band Short-Term Hearing Conservation Noise Exposure Requirements

Noise limits

5.4.3.2.1.2 Narrow-Band Long-Term Hearing Conservation Noise Exposure Requirements

Noise measurements

5.4.3.2.4 Measurement of Noise Levels

Noise reduction

5.4.3.2.5 Noise Reduction For Equipment Upgrades
5.4.4 Example Acoustics Design Solutions
5.4.4.2 Control of Noise Path Transmission

Noise shields

9.3.3.5 Speech Transmission Equipment Design Requirements

Noise source

5.4.4.1 Noise Control at the Source

Noise types

5.4.3.2 Noise Exposure Requirements

Non-Ionizing radiation sources

5.7.3.1.2 Sources of Non-Ionizing Radiation

Non-entry areas

9.6.3.1.8.2 Design Requirements for Data Forms/Form Filling

Non-ionizing radiation

5.7.3.1.1 Types of Non-Ionizing Radiation
5.7.3.1.3 Human Responses to Non-Ionizing Radiation
5.7.3.2.1 Non-Ionizing Radiation Exposure Limits

Non-ionizing radiation protection

5.7.3.2.2 Non-Ionizing Radiation Protection Design Requirements

Nonadjacent crew stations

8.3.3.2 Non-Adjacent Crew Stations - Design Requirements

Nonconductive tools

11.2.3.7 Special Tool Features Design Requirements

Nondisposable air filters

13.2.3.4 Air Filter Design Requirements

Nonexercise countermeasures

7.2.3.4 Nonexercise Countermeasures
7.2.3.4.3 Nonexercise Countermeasures Design Requirements

Nonfixed handles

11.6.3.3 Nonfixed Handles Design Requirements

Nonionizing radiation standards

14.2.3.11
14.2.3.10 EVA Radiation Dosage Design Requirements

Nonoptical surfaces

11.11.3.2.1 Material

Nonpropulsive

13.2.3.3 Vacuum Cleaning Design Requirements

Nonradiographic imaging

10.9.3.2.6 Diagnostic Imaging

Nonsparking tools

11.2.3.7 Special Tool Features Design Requirements

Nonstandard tools

11.9.3.3 Tool-Actuated Fastener Design Requirements

Nonstructural closures

11.4.3 Closures and Covers Design Requirements

Nontorquing

13.2.3.3 Vacuum Cleaning Design Requirements

Normoxic line

5.1.2.1.2 Gas Environment Design Considerations

Number keypad

9.3.3.4.1.1 Layout

Number symbol

9.5.3.1.14.5 Special Character Design Requirements

Numbering

9.6.3.2.2 Design Requirements for Scrolling

Numbers

9.6.2.8 Design Requirements for Format

Numerals

9.5.3.1.14.7 Character Width Design Requirements

Nutrition

7.2.2	Nutrition
7.2.2.3.1	Food - Design Requirements

Nutrition program

7.2.2.2.1	Goal of Nutrition Program - Design Considerations
7.2.2.4	Example Nutritional Program

Odor

4.4.2.1	Olfaction
10.2.2	Personal Hygiene Design Considerations
10.3.3.1	Defecation and Urination Facilities Design Requirements
10.11.3	Trash Management Facility Design Requirements

Off-the-shelf tools

11.2.4.1	Example Manual Tools

Office supplies

13.4.2	Information Management Design Considerations

Olfaction

4.4	Olfaction and Taste

On-line documentation

9.6.3.4.6.2	Design Requirements for On-Line Instruction

On-line help

9.6.3.4.7	On-Line Help
9.6.3.4.7.1	Design Considerations for On-Line Help

On-line instruction

9.6.3.4.6	On-Line Instructions
9.6.3.4.6.2	Design Requirements for On-Line Instruction

On-orbit phase noise

5.4.2.1.2	On-Orbit Phase Acoustic Environment

On-orbit vibration

5.5.2.1.2 On-Orbit Phase Vibration Environment

One hand operation

11.7.3.3 Equipment Restraint Design Requirements
11.9.3.2 Hand-Actuated Fastener Design Requirements
11.10.3 Connector Design Requirements

Open circuit

12.3.2.1 Fault Detection and Isolation Design Requirements

Open seeds

11.11.3.1.6 Bubbles Seeds

Open window

9.6.3.1.7.5.1 Design Considerations for Interactions with Windows
9.6.3.1.7.5.2 Design Requirements for Interactions with Windows

Operating instructions

9.5.3.1.8 Operating Instruction Design Requirements
9.5.3.1.14.3 Upper/Lower Case Design Requirements

Operating instructions location

9.5.3.1.8 Operating Instruction Design Requirements

Operating mechanisms

11.3.3.2 Design Requirements Common to Both Stowage & Equipment Drawers

Operational bioinstrumentation system

14.2.4.3 EVA Example Medical Monitoring Design Solutions

Operational displays

9.4.2.3.2 Information Presentation Design Requirements

Operational mode message

9.6.3.4.3.2 Design Requirements for System Status Messages

Operator comfort

9.4.3.3.3 Operator Comfort and Convenience Design Requirements

Operator convenience

9.4.3.3.3 Operator Comfort and Convenience Design Requirements

Operator stability

8.9.2.2 Considerations for Location of IVA Personnel Restraints

Optical connectors

11.10.3.4 Optical Connectors Design Requirements

Optical density

11.11.3.1.4 Optical Density

Optical filters

11.11.3.3 Visual Protection Design Requirements

Optical laser radiation exposure limits

5.7.3.2.1 Non-Ionizing Radiation Exposure Limits

Optical radiation

5.7.3.1.1 Types of Non-Ionizing Radiation
5.7.3.1.3 Human Responses to Non-Ionizing Radiation
5.7.3.1.4 Non-Ionizing Radiation Protection Design Considerations
5.7.3.2.2 Non-Ionizing Radiation Protection Design Requirements

Optical surface microfractures

11.11.3.2.1 Material

Oral hygiene

7.2.5.3 Personal Hygiene - Design Requirements
10.2.3.3 Oral Hygiene Design Requirements

Organic contamination

5.1.3.3 Atmosphere Toxicological Monitoring Design Requirements

Orientation

8.4.2 Orientation Design Considerations
8.4.4 Example Orientation Design Solutions

Orientation coding

8.5.3.3 Location & Orientation By Color Coding Design Requirements
9.5.3.1.7 Location and Orientation Coding Design Requirements

Overstriking

9.6.3.3.1.2 Design Requirements for Editing

Overview

1.2 Overview

Overwriting

9.6.3.1.8.2 Design Requirements for Data Forms/Form Filling

Oxygen concentration

5.1.2 Atmosphere Design Considerations

Oxygen uptake

10.8.3.2 Countermeasure Monitoring Design Requirements

Ozone

5.1.2.2.1.7.3 Toxic Gaseous Contaminants Design Considerations

Page direction

9.6.3.2.3 Design Requirements for Paging

Page increments

9.6.3.2.3 Design Requirements for Paging

Page numbering

9.6.3.2.3 Design Requirements for Paging

Page size

9.6.3.3.1.1 Design Considerations for Editing

Paging

9.6.3.2.3 Design Requirements for Paging

Palm

14.2.4.5 EVA Glove Example Design Solutions

Panel color

9.2.2.2.4 Workstation Color Design Requirements

Pantry

10.5.3.2 Food Selection Preparation Consumption -Design Requirements

Parallax error

9.2.3.2.2 Display Readability Design Requirements

Parentheses

9.5.3.1.14.2 Punctuation Design Requirements

Partial body cleansing

10.2.3.1 Partial Body Cleansing Design Requirements

Partial body washing

10.2.3.1 Partial Body Cleansing Design Requirements

Particulate monitoring

5.1.3.3 Atmosphere Toxicological Monitoring Design Requirements
7.2.7.3.3 Environmental Monitoring Design Requirements

Pathogen free animals

5.1.3.4.3 Cross Contamination Design Requirements

Pattern coding

9.4.2.3.3.4 Scales and Pointers Design Requirements

Payloads

12.3.1.4 Removal Replacement and Modularity Design Requirements

Peak clipping

9.3.3.5 Speech Transmission Equipment Design Requirements

Pedal control return

9.3.3.3.10 Pedal Design Requirements

Pedal surface

9.3.3.3.10 Pedal Design Requirements

Pedal travel path

9.3.3.3.10 Pedal Design Requirements

Pedals

9.3.3.3.10 Pedal Design Requirements

Pedestals

9.2.2.2.4 Workstation Color Design Requirements

Pelvic restraints

11.7.2.4 Example Personnel Restraint Design Solutions

Percentile ranges

3.3.2.2.1 Application of Data Design Considerations

Percentiles

3.2.1 Anthropometric Database Design Considerations

Performance effects of noise

5.4.2.3.2 Performance Effects of Noise

Performance effects of vibration

5.5.2.3.2 Performance Effects of Vibration

Periods

9.5.3.1.14.2 Punctuation Design Requirements

Permanent menus

9.6.3.1.6.2 Design Requirements for Menus
9.6.3.1.6.3 Permanent Menus
9.6.3.1.6.3.2 Design Requirements for Permanent Menus

Personal ancillary equipment

11.13.2 Personal Ancillary Equipment

Personal equipment

3.3.3.2.5 Clothing Design Considerations

Personal hygiene

7.2.5 Personal Hygiene
7.2.5.2 Personal Hygiene - Design Considerations
8.6.4.3 Skylab Waste Management and Personal Hygiene Compartment
10.2 Personal Hygiene

Personal hygiene water

7.2.5.3.6 Personal Hygiene Water Design Requirements

Personal items

10.4.3 Individual Crew Quarters Design Requirements

Personalization

8.12.2.1 General Interior Decor Design Considerations

Personnel mobility aids

11.8.2 Personnel Mobility Aids

Personnel restraints

8.9.2.2 Considerations for Location of IVA Personnel Restraints
11.7.2 Personnel Restraints
11.7.2.3 Personnel Restraints Design Requirements
13.4.3.2 Hardcopy Information Management Design Requirements

Personnel safety

6.2.3 General Safety Design Requirements

Perspiration

5.8.3.2 Thermal Monitoring and Control Design Requirements
10.7.2 Recreation Facility Design Considerations
10.8.2 Microgravity Countermeasure Facility Design Considerations

Pharmaceuticals

10.9.3.2.7 Countermeasures
10.9.3.2.12 Pharmaceuticals

Pharmacological countermeasures

7.2.3.4.3 Nonexercise Countermeasures Design Requirements

Photographic windows

11.11.3.2 Scientific Window Design Requirements

Physical access to equipment

12.3.1.2 Physical Accessibility Design Requirements

Physical dimensions

8.2.2.3 Physical Dimensions of Crewmembers Design Considerations

Physicians instruments

10.9.3.2.14 Physician's Instruments

Physiologic monitoring equipment

10.9.3.2.7 Countermeasures Physiological effects of noise
5.4.2.3.1 Physiological Effects of Noise

Physiological monitoring

10.9.3.2.3 Physiological Monitoring Equipment

Physiological stress

14.2.3.8 EVA Medical Monitoring Design Requirements

Pin connectors

6.4.3.7 Plugs and Receptacles Requirements

Pin fasteners

11.9.3.2 Hand-Actuated Fastener Design Requirements

Pins

11.10.3.5 Connector Identification/Alignment Design Requirements

Placards

8.5.3.4 Location Coding With Placards Design Requirements

Placeholding cursor

9.6.3.2.1 Design Requirements for Position Designation (Cursor)
9.6.3.2.1.2 Design Requirements for Placeholding Cursor

Placeholding cursor amount

9.6.3.2.1.2 Design Requirements for Placeholding Cursor

Placeholding cursor characteristics

9.6.3.2.1.2 Design Requirements for Placeholding Cursor

Planned EVA

14.1.2 General EVA Design Considerations

Plating

11.9.3.4 IVA Fastener Design Requirements

Pliers

11.2.3.1.3 Tool Actuation Forces and Direction of Action Design Requirements

Plotters

9.4.2.3.3.10 Hardcopy Display Design Requirements

Plug connectors

12.3.1.2 Physical Accessibility Design Requirements

Plugs

6.4.3.7 Plugs and Receptacles Requirements
11.10.3.5 Connector Identification/Alignment Design Requirements

Pneumatic connectors

14.6.4.3 EVA Connectors Design Requirements

Point source exposure limits

5.7.3.2.1 Non-Ionizing Radiation Exposure Limits

Pointers

9.4.2.3.3.4 Scales and Pointers Design Requirements

Pointing cursor

9.6.3.2.1 Design Requirements for Position Designation (Cursor)
9.6.3.2.1.1 Design Requirements for Pointing Cursor

Pointing cursor characteristics

9.6.3.2.1.1 Design Requirements for Pointing Cursor

Pointing cursor movement

9.6.3.2.1.1 Design Requirements for Pointing Cursor

Polar orbits

14.2.2.10 EVA Radiation Dosage Design Considerations

Pop up menus

9.6.3.1.6.4.1 Design Considerations for User-Requested Menus

Popping windows

9.6.3.1.7.5.2 Design Requirements for Interactions with Windows

Population

3.3.6.2 Body Volume Data Design Considerations
3.3.7.2 Body Mass Properties Design Considerations

Portable equipment

12.3.2.1 Fault Detection and Isolation Design Requirements

Portable foot restraints

11.7.2.3.2.1 General Foot Restraint Design Requirements

Portable handholds

11.8.2.2.4 Handhold and Handrail Design Loads Design Requirements

Portable handrails

11.8.2.2.4 Handhold and Handrail Design Loads Design Requirements
11.8.2.2.6 Handhold and Handrail Mounting Design Requirements

Portable lights

8.13.3.4 Lighting Fixtures and Controls Design Requirements
14.4.3.3 EVA Workstation Lighting Design Requirements

Post landing atmosphere

5.1.2.1.3 Mission Related Design Considerations

Post-mission health management

7.2.6.3 Pre/Post-Mission Health Management - Design Requirements

Posture

4.8.2 Motor Skills (Coordination) - Design Considerations

Potable water

7.2.2.3.2.1 Potable Water Quality Design Requirements
7.2.2.3.2.2 Potable Water Quantity Design Requirements
7.2.2.3.2.3 Potable Water Temperature Design Requirements

Potable water temperature

7.2.2.3.2.3 Potable Water Temperature Design Requirements

Pound symbol

9.5.3.1.14.5 Special Character Design Requirements

Power cords

6.4.3.9 Power cords Requirements

Power failure

12.3.2.1 Fault Detection and Isolation Design Requirements

Power output

10.8.3.2 Countermeasure Monitoring Design Requirements

Power tools

11.2.2.1 Power Tools Design Considerations
11.2.4.2 Example Power Tools

Pre-mission conditioning

7.2.3.3.2.2 Deconditioning Countermeasure Design Considerations

Pre-mission health management

7.2.6.3 Pre/Post-Mission Health Management - Design Requirements

Pre-mission training

8.2.2.1 Microgravity Design Considerations

Precedence

1.3 Scope, Precedence and Limitations

Precursor effects

5.7.2.1.3.3.2 Gastrointestinal or Precursor Effects

Prelaunch atmosphere

5.1.2.1.3 Mission Related Design Considerations

Preliminary clothing

11.13.1.2.1 Preliminary Clothing Design Considerations

Pressure

5.1.2.2 Dangers Associated with Unsafe Atmospheres - Design Considerations

Pressure devices

10.9.3.2.7 Countermeasures

Pressure hatch covers

8.10.3.2 Pressure Hatch Indicator/Visual Display Design Requirements

Pressure indicators

8.10.3.2 Pressure Hatch Indicator/Visual Display Design Requirements

Pressure limits

5.1.2.1.2 Gas Environment Design Considerations

Pressurization

6.7.5 Vaporization of Tissue Fluids

Pressurized countermeasures

7.2.3.4.3 Nonexercise Countermeasures Design Requirements

Preventive Care

7.2 Preventive Care

Preventive maintenance

12.2 Design for Maintainability - Design Considerations

Preventive measures

7.3.2.2 Anticipated Illnesses and Injuries - Design Considerations

Printed circuit switch displacement

9.3.3.3.16 Printed Circuit (DIP) Switches Design Requirements

Printed circuit switch resistance

9.3.3.3.16 Printed Circuit (DIP) Switches Design Requirements

Printed circuit switch shape

9.3.3.3.16 Printed Circuit (DIP) Switches Design Requirements

Printed circuit switch use

9.3.3.3.16 Printed Circuit (DIP) Switches Design Requirements

Printed circuit switches

9.3.3.3.16 Printed Circuit (DIP) Switches Design Requirements

Printers

9.4.2.3.3.10 Hardcopy Display Design Requirements

Privacy

8.2.2.2 Multipurpose Use of Volume - Design Considerations
8.3.2.1 General Adjacency Design Considerations
8.3.2.2 Specific Adjacency Design Considerations
8.3.3.2 Non-Adjacent Crew Stations - Design Requirements
8.6.2.4 Social Design Considerations
10.2.2 Personal Hygiene Design Considerations
10.2.3.2 Whole Body Cleansing Design Requirements
10.3.3.1 Defecation and Urination Facilities Design Requirements
10.4.2 Individual Crew Quarters Design Considerations
10.4.3 Individual Crew Quarters Design Requirements
10.9.3.1 Medical Communications/Computing Design Requirements

Processing aborts

9.6.3.5 Design Requirements for Sequence Control

Productivity

13.2.2 Housekeeping Design Considerations

Progress messages

9.6.3.4.2.2 Design Requirements for User Feedback

Projected alphanumeric design

9.4.2.3.3.2 Large Screen Display Design Requirements

Prompt language

9.6.3.4.5.2 Design Requirements for Prompts

Prompt location

9.6.3.4.5.2 Design Requirements for Prompts

Prompt use

9.6.3.4.5.2 Design Requirements for Prompts

Prompts

9.6.3.4.5 Prompts

Protective corners

6.3.3.3 Protective Covers on Exposed Protrusions Requirements

Protective covers

6.4.3.3.2 Protective Cover Requirements
11.11.3.4 Physical Protection Design Requirements
11.11.3.5 Window Maintenance Design Requirements

Protective edges

12.3.1.2 Physical Accessibility Design Requirements

Protrusions

6.3.3.3 Protective Covers on Exposed Protrusions Requirements

Proxemics

8.6.2.4 Social Design Considerations

Psychological effects of noise

5.4.2.3.2 Performance Effects of Noise

Psychological factors

4.3.2.2 Noise Design Considerations

Psychological response

8.12.3.1 Aesthetic and Psychological Requirements

Pull down menus

9.6.3.1.6.4.1 Design Considerations for User-Requested Menus

Punctuation

9.6.3.1.3.2 Design Requirements for Command Language
9.5.3.1.14.2 Punctuation Design Requirements

Push/pull control activation

9.3.3.3.12 Push-Pull Control Design Requirements

Push/pull control detents

9.3.3.3.12 Push-Pull Control Design Requirements

Push/pull control handles

9.3.3.3.12 Push-Pull Control Design Requirements

Push/pull control resistance

9.3.3.3.12 Push-Pull Control Design Requirements

Push/pull controls

9.3.3.3.12 Push-Pull Control Design Requirements

Pushbutton activation

9.3.3.3.8 Pushbutton Design Requirements

Pushbutton dimension

9.3.3.3.8 Pushbutton Design Requirements

Pushbutton displacement

9.3.3.3.8 Pushbutton Design Requirements

Pushbutton resistance

9.3.3.3.8 Pushbutton Design Requirements

Pushbuttons

9.3.3.3.8 Pushbutton Design Requirements

Quality factor

5.7.2.1.3.1 Units of Measure Used to Describe Human Responses to IO

Question and answer

9.6.3.1.9 Question and Answer

Question and answer structure

9.6.3.1.9.2 Design Requirements for Question and Answer

Questions

9.6.3.1.9.2 Design Requirements for Question and Answer

Quick disconnects

11.10.3 Connector Design Requirements

RDA

7.2.2.3.1 Food - Design Requirements

RMS capabilities

14.7.4.2 Remote Manipulator System (RMS)

Racial variations

3.2.3.2 Inter-Individual Variation Design Considerations

Rack design

11.3.3 Drawer and Rack Design Requirements

Rack location

11.3.3.1 Drawer and Rack Interfacing Requirements

Racks

11.3 Drawers and Racks
12.3.1.2 Physical Accessibility Design Requirements

Radioactive substances

5.7.2.2.2 Ionizing Radiation Protection Design Requirements

Radiant energy

11.11.3.3 Visual Protection Design Requirements

Radiant temperature

5.8.2 Thermal Environment Design Considerations

Radiated noise reduction

5.4.4.2 Control of Noise Path Transmission

Radiation

5.7 Radiation
5.8.2.2.1 Modes of Heat Exchange - Design Considerations

Radiation biological effects

5.7.2.1.3 Human Responses to Ionizing Radiation
5.7.2.1.3.4 Biological Effects of HZE Particles

Radiation control program

5.7.2.2.2 Ionizing Radiation Protection Design Requirements

Radiation damage

5.7.2.1.3.3.4 Skin Tissue Effects

Radiation detectors

5.7.2.2.3 Ionizing Radiation Monitoring and Dosimetry Design Requirements

Radiation dosage

3.3.5.2 Body Surface Area Design Considerations

Radiation dose

5.7.2.2.2 Ionizing Radiation Protection Design Requirements
5.7.2.2.3 Ionizing Radiation Monitoring and Dosimetry Design Requirements

Radiation dose prognosis

5.7.2.1.3.3.3 Hematological Effects

Radiation effects

5.7.2.1.3.3.5 Reproductive Cell Effects
5.7.2.1.3.3.6 Performance Degradation Effects

Radiation exposure

5.7.2.1.3.3.3 Hematological Effects

Radiation exposure effects

5.7.2.1.3.3 Acute Effects of Ionizing Radiation
5.7.2.1.3.3.1 Whole-Body Irradiation Effects
5.7.2.1.3.3.2 Gastrointestinal or Precursor Effects

Radiation exposure limits

5.7.2.1.3.2 Late Effects of Ionizing Radiation
5.7.3.1.3 Human Responses to Non-Ionizing Radiation
5.7.3.2.1 Non-Ionizing Radiation Exposure Limits

Radiation fields

5.7.2.1.4.5 Radiation Fields in Polar and Geosynchronous Orbit

Radiation measurements

5.7.2.1.3.1 Units of Measure Used to Describe Human Responses to IO

Radiation monitoring

5.7.2.1.4.6 Radiation Monitoring
5.7.2.2.2 Ionizing Radiation Protection Design Requirements
5.7.2.2.3 Ionizing Radiation Monitoring and Dosimetry Design Requirements
5.7.3.2.2 Non-Ionizing Radiation Protection Design Requirements
7.2.7.3.3 Environmental Monitoring Design Requirements

Radiation performance degradation

5.7.2.1.3.3.6 Performance Degradation Effects

Radiation protection

5.7.2.1.4 Ionizing Radiation Protection Design Considerations
5.7.2.1.4.1 Mass Shielding
5.7.2.1.4.4 Avoidance of High Radiation Fluxes
5.7.2.1.4.5 Radiation Fields in Polar and Geosynchronous Orbit
5.7.2.2.2 Ionizing Radiation Protection Design Requirements
5.7.2.2.4 Ionizing Radiation Personnel Protective Equipment Design Requirements
5.7.3.1.4 Non-Ionizing Radiation Protection Design Considerations
11.11.3.3 Visual Protection Design Requirements

Radiation protection devices

5.7.3.2.2 Non-Ionizing Radiation Protection Design Requirements

Radiation protective garments

5.7.2.2.4 Ionizing Radiation Personnel Protective Equipment Design Requirements

Radiation protectors

5.7.2.1.4.3 Chemical Protectors

Radiation safety

5.7.3.2.2 Non-Ionizing Radiation Protection Design Requirements

Radiation skin reactions

5.7.2.1.3.3.4 Skin Tissue Effects

Radiation time scheduling

5.7.2.1.4.4 Avoidance of High Radiation Fluxes

Radioactive contamination control

5.7.2.2.4 Ionizing Radiation Personnel Protective Equipment Design Requirements

Radiofrequency protection

5.7.3.2.1 Non-Ionizing Radiation Exposure Limits

Radiofrequency radiation

5.7.3.1.1 Types of Non-Ionizing Radiation
5.7.3.1.3 Human Responses to Non-Ionizing Radiation
5.7.3.1.4 Non-Ionizing Radiation Protection Design Considerations
5.7.3.2.2 Non-Ionizing Radiation Protection Design Requirements

Radiographic imaging

10.9.3.2.6 Diagnostic Imaging

Radiological monitoring

7.2.7.3.3 Environmental Monitoring Design Requirements

Rags

13.2.2 Housekeeping Design Considerations

Ratcheting tools

11.2.3.1.3 Tool Actuation Forces and Direction of Action Design Requirements

Re-entry phase vibration

5.5.2.1.3 Entry Phase Vibration Environment

Reach

3.3.3 Reach

Reach envelope

3.3.3.2.2 Body Posture Design Considerations

Reach limits

3.3.3.2.6 Crewmember Size Design Considerations

Reaction time

4.7 Reaction Time

Real-time interaction

9.6.3 Real-Time Interaction

Rear access

12.3.1.2 Physical Accessibility Design Requirements

Receptacles

6.4.3.7 Plugs and Receptacles Requirements

Recessed connectors

6.4.3.6 Warning Labels Plus Recessed Connectors Requirements

Reconfigurable workstations

9.2.2.1.2 Generic Workstation Design Considerations

Reconfiguration

8.2.3.5 Reconfiguration

Recorders

9.4.2.3.3.10 Hardcopy Display Design Requirements

Recreation

10.8.3.3 Display Capabilities for Exercising Crewmembers Design Requirements

Recreation facility

10.7 Recreation Facility

Recreation facility furnishings

10.7.3 Recreation Facility Design Requirements

Recreation facility location

10.7.3 Recreation Facility Design Requirements

Recreation facility size

10.7.2 Recreation Facility Design Considerations
10.7.3 Recreation Facility Design Requirements

Recreational materials

10.7.2 Recreation Facility Design Considerations

Rectilinear vibration

5.5.2.4.1 Vibration Direction Criteria Design Considerations

Recuperation period

7.3.2.2 Anticipated Illnesses and Injuries - Design Considerations

Red light

8.13.2.1 Color of Light Source Design Considerations
8.13.3.1.4 Illumination Levels for Dark Adaptation Design Requirements

Reduced comfort boundary

5.5.2.4.2 Vibration Exposure Criteria Design Considerations (0.1 to 1 Hz)
5.5.2.4.3 Vibration Exposure Criteria Design Considerations (1 to 80 Hz)
5.5.3.2.3 Reduced Comfort Boundary
5.5.3.3.3 Reduced Comfort Boundary

Reduced gravity

7.2.3.2 Reduced Gravity Countermeasures Design Considerations

Reduced gravity countermeasures

7.2.3 Reduced Gravity Countermeasures

Reflectance

11.11.3.2.4 Reflectance

Reflections

8.13.3.6 Workstation Illumination Design Requirements
9.2.2.2.4 Workstation Color Design Requirements
9.4.2.3.1.3 Reflections Design Requirements
11.11.2.1 Optical Characteristics Design Considerations
11.11.3.1.2 Surface Reflections

Relational Database

1.1 Purpose
1.5.2 Using the Standards Database Management System (SDMS)

Relative biological effectiveness

5.7.2.1.3.1 Units of Measure Used to Describe Human Responses to IO

Remote grids

9.3.3.4.6 Stylus and Grid Design Requirements

Remote manipulator system

14.7.4.2 Remote Manipulator System (RMS)

Removable items

11.5.3.1 General Mounting Design Requirements

Repair

12.3.1.2 Physical Accessibility Design Requirements

Replaceable fasteners

11.9.3.1 General Fastener Design Requirements

Replaceable units

12.3.1.1 General Maintainability Design Requirements
12.3.1.4 Removal Replacement and Modularity Design Requirements
12.3.2.1 Fault Detection and Isolation Design Requirements

Repressurization

14.2.3.9 EVA Suit Pressure Design Requirements

Reproductive cell

5.7.2.1.3.3.5 Reproductive Cell Effects

Resizing windows

9.6.3.1.7.5.1 Design Considerations for Interactions with Windows

Respirator

10.9.3.2.4 Medical Life Support

Response time

9.2.3.2.8 Control/Display Movement Compatibility Design Requirements
9.6.2.9.1 Design Considerations for Information Display Rate
9.6.2.9.2 Design Requirements for Information Display Rate

Restraint cleaning

11.7.2.3.1 General Personnel Restraints Design Requirements

Restraint color

11.7.3.3 Equipment Restraint Design Requirements

Restraint location

8.9.2.2 Considerations for Location of IVA Personnel Restraints
8.9.3.2 IVA Restraint Integration Design Requirements

Restraint repair

11.7.2.3.1 General Personnel Restraints Design Requirements

Restraint system

3.3.3.2.3 Restraint Design Considerations

Restraints

4.9.2 Strength - Design Considerations
8.2.2.1 Microgravity Design Considerations
8.9 Mobility Aids and Restraints Architectural Integration
8.10.3.4 Operating Forces Design Requirements
8.11.2.2 Window Configuration Design Considerations
8.11.3 Window Integration Design Requirements

9.2.4.1.1 Restraint Selection Design Considerations
9.2.5.1.2 Window Workstation Design Requirements
9.2.5.2.2 Maintenance Workstation Design Requirements
9.3.3.3.5 Handwheel Design Requirements
10.2.2 Personal Hygiene Design Considerations
10.3.3.1 Defecation and Urination Facilities Design Requirements
10.3.4 Example Body Waste Management Facility Design
10.4.3 Individual Crew Quarters Design Requirements
10.5.3.1 Overall Galley and Wardroom Layout - Design Requirements
10.10.3 Laundry Facility Design Requirements
11.2.2.2 Body Stabilization When Using Tool Design Considerations
11.3.2 Drawer and Rack Design Considerations
11.7 Restraints
11.12.3 Packaging Design Requirements
12.3.1.1 General Maintainability Design Requirements
13.4.3.2 Hardcopy Information Management Design Requirements

Reusable clothing

11.13.1.2.2 Disposable vs Reusable Clothing

Reusable wipes

13.2.3.2 Surface Cleaning Design Requirements

Reverberation time

5.4.2.3.2 Performance Effects of Noise
5.4.3.2.2.1 Direct Voice Communications Noise Exposure Requirements

Rocker switch activation

9.3.3.3.11 Rocker Switch Design Requirements

Rocker switch dimension

9.3.3.3.11 Rocker Switch Design Requirements

Rocker switch orientation

9.3.3.3.11 Rocker Switch Design Requirements

Rocker switches

9.3.3.3.11 Rocker Switch Design Requirements

Rolling ball

9.3.3.4.5 Track Ball (Rolling Ball) Design Requirements

Room shape

8.6.2.2 Visual Design Considerations

Rotary control knobs

9.3.3.3.1 Knob Design Requirements

Rotary selector switches

9.3.3.3.1 Knob Design Requirements

Rotary switches

9.3.3.2 Accidental Actuation Design Requirements

Rotary valve controls

9.3.3.3.3 Valve Control Design Requirements

Rotational acceleration

5.3.2.1 Acceleration Environments
5.3.2.1.2 Rotational Acceleration Environments
5.3.2.3 Human Responses to Rotational Accelerations
5.3.3.2 Rotational Acceleration Design Requirements

Rotational acceleration limits

5.3.3.2 Rotational Acceleration Design Requirements

Rotational acceleration tolerance

5.3.2.3 Human Responses to Rotational Accelerations

Rotational tolerance

5.5.3.2.1 Severe Discomfort Boundary

Rotational vibration

5.5.2.4.1 Vibration Direction Criteria Design Considerations

Rows

9.6.2.4.3.2 Design Requirements for Matrix Tables

Rubber bands

11.7.3.4 Example Equipment Restraint Design Solutions

Safe atmosphere

5.1.2.1 Safe Atmospheres - Design Considerations

Safe haven

9.4.4.3.2 General Caution and Warning System Design Requirements
10.9.3.2.15 Safe Haven Medical Design Requirements
10.9.3.2.15.2 Contingency Operation Design Requirements

Safe haven capabilities

10.9.3.2.15.1 Nominal Operation Design Requirements

Safety

6.2 General Safety
6.4.2.1 *Bioinstrumentation System Design Considerations*
8.3.3.2 Non-Adjacent Crew Stations - Design Requirements
8.12.3.6 Safety
11.7.2.3.2.3 Foot Restraint Loads Design Requirements
11.8.2.2.3 Handhold and Handrail Finish Design Requirements
11.8.2.2.6 Handhold and Handrail Mounting Design Requirements
11.9.3.1 General Fastener Design Requirements
13.2.2 Housekeeping Design Considerations

Safety factors

6.2.2.1 Safety Factors

Safety pins

8.10.3.3 Opening and Closing Mechanisms Design Requirements

Safety wires

11.9.3.2 Hand-Actuated Fastener Design Requirements

Sanitation

10.3.3.1 Defecation and Urination Facilities Design Requirements
10.5.3.4 Galley and Wardroom Cleaning - Design Requirements

Saving

9.6.3.3.2 Saving
9.6.3.3.2.1 Design Considerations for Saving
9.6.3.3.2.2 Design Requirements for Saving

Scale break

9.4.2.3.3.4 Scales and Pointers Design Requirements

Scale marking design

9.5.3.1.4 Scale Marking Design Requirements

Scale marking interval values

9.5.3.1.4 Scale Marking Design Requirements

Scale marking luminance

9.5.3.1.4 Scale Marking Design Requirements

Scale markings

9.4.2.3.3.4 Scales and Pointers Design Requirements

Scale markings accuracy

9.5.3.1.4 Scale Marking Design Requirements

Scales

9.4.2.3.3.4 Scales and Pointers Design Requirements

Schematic

9.6.2.5.2 Design Requirements for Graphics

Scientific windows

11.11.3.2 Scientific Window Design Requirements

Scoop proof connectors

14.6.4.3 EVA Connectors Design Requirements

Scope

1.3 Scope Precedence and Limitations

Screen layouts

9.6.2.1 Design Considerations for Data Display

Screens

11.4.2 Closures and Covers Design Considerations
11.4.3 Closures and Covers Design Requirements

Screws

6.3.3.6 Screws and Bolts Requirements

Scroll rate

9.6.3.2.2 Design Requirements for Scrolling

Scrolling

9.6.3.1.7.5.1 Design Considerations for Interactions with Windows
9.6.3.2 Design Requirements for Movement Within User Interfaces
9.6.3.2.2 Design Requirements for Scrolling

Scrolling direction

9.6.3.2.2 Design Requirements for Scrolling

Scrolling method

9.6.3.2.2 Design Requirements for Scrolling

Seals

11.4.3 Closures and Covers Design Requirements

Searching

9.6.3.2.4 Design Requirements for Searching

Seat belt

11.7.2.3.3.1 Body Restraint Donning/Doffing Design Requirements
11.7.2.3.3.2 Body Restraint Loads Design Requirements
11.7.2.3.3.4 Body Restraint Dimensional Design Requirements

Secondary radiation

5.7.2.1.4.1 Mass Shielding

Secular change

3.2.3.3 Secular Changes Design Considerations

Securing pins

6.3.3.7 Securing Pins Requirements

Security

8.3.2.1 General Adjacency Design Considerations
8.3.3.2 Non-Adjacent Crew Stations - Design Requirements
10.12.2 Stowage Facility Design Considerations

Seeds

11.11.3.2.1 Material

Selectable items

9.6.4.4 Design Requirements for Interactive Control

Selecting data

9.6.3.3.1.2 Design Requirements for Editing

Self image

10.2.2 Personal Hygiene Design Considerations

Sensors

6.6.3.2.3 Sensor Replacement
12.3.2.1 Fault Detection and Isolation Design Requirements

Sensory conflict theory

4.5.2.2 Space Adaptation Syndrome

Sequence control

9.6.3.5 Design Requirements for Sequence Control

Serial processing

9.6.2.5.1 Design Considerations for Graphics

Set indicator

9.4.2.3.3.5 Clock and Timer Design Requirements

Severe discomfort boundary

5.5.2.4.2 Vibration Exposure Criteria Design Considerations (0.1 to 1 Hz)
5.5.3.2.1 Severe Discomfort Boundary

Sex variations

3.2.3.2 Inter-Individual Variation Design Considerations

Shades

11.11.2.2 Visual Protection Design Considerations

Shadows

8.13.3.6 Workstation Illumination Design Requirements

Shaving

7.2.5.3.1 Body Grooming Design Requirements
10.2.3.5 Grooming and Shaving Design Requirements

Shielding

9.2.5.1.2 Window Workstation Design Requirements

Shims

11.5.3.1 General Mounting Design Requirements

Shock

6.4.2 Electrical Hazards Design Considerations

Short flights

5.1.2.1.3 Mission Related Design Considerations

Short term noise

5.4.2.4.1.2 Short-Term Hearing Conservation Criteria Considerations
5.4.2.4.3.2 Short-Term Annoyance Noise Criteria Considerations

Shoulder elevation

3.3.4.2 Neutral Body Posture Design Considerations

Shoulder harness

11.7.2.3.3.1 Body Restraint Donning/Doffing Design Requirements
11.7.2.3.3.2 Body Restraint Loads Design Requirements
11.7.2.3.3.4 Body Restraint Dimensional Design Requirements

Shutters

11.11.2.2 Visual Protection Design Considerations

Signal lights

9.4.4.3.3 Visual Caution and Warning Display Design Requirements

Simplest design

2.2.1 Simplicity Design Considerations
2.3.1 Simplicity Design Requirements

Single display monitor

9.6.2.2 Design Requirements for Data Display

Single rows of connectors

11.10.3.6 Connector Arrangement Design Requirements

Skeletal

10.8.3.1 Microgravity Countermeasures Equipment/Supplies Design Requirements

Skeletal changes

5.2.2.1 Physiological Effects of Microgravity

Skin care

7.2.5.3.1 Body Grooming Design Requirements

Skin temperature

5.8.2.2.4 Human Performance in Cold - Design Considerations

Skylab wardroom

10.6.4 Example Facility Design Solution

Slashes

9.5.3.1.14.2 Punctuation Design Requirements

Sleep

5.2.2.2 Sleeping Eating and Mobility Changes in Microgravity
7.2.4 Sleep
8.6.4.2 Skylab Sleep Compartment

Sleep aids

7.2.4.3 Sleep - Design Requirements

Sleep area illumination

8.13.3.1.3 Illumination Levels of Sleeping Areas Design Requirements

Sleep compartment noise

5.4.3.2.3.1 Wide-Band Long-Term Annoyance Noise Exposure Requirements
5.4.3.2.3.4 Impulse Annoyance Noise Exposure Requirements

Sleep duration

7.2.4.2 Sleep - Design Considerations
7.2.4.3 Sleep - Design Requirements

Sleep facilities

7.2.4.3 Sleep - Design Requirements

Sleep restraint stowage

11.7.2.3.4 Sleep Restraints Design Requirements

Sleep restraints

11.7.2.3.4 Sleep Restraints Design Requirements

Sleep/work cycle

7.2.4.2 Sleep - Design Considerations

Sleeping bag

11.7.2.3.4 Sleep Restraints Design Requirements

Slew control

9.4.2.3.3.5 Clock and Timer Design Requirements

Slide switch activation

9.3.3.3.14 Slide Switch Control Design Requirements

Slide switch control setting

9.3.3.3.14 Slide Switch Control Design Requirements

Slide switch dimensions

9.3.3.3.14 Slide Switch Control Design Requirements

Slide switch orientation

9.3.3.3.14 Slide Switch Control Design Requirements

Slide switch resistance

9.3.3.3.14 Slide Switch Control Design Requirements

Slide switches

9.3.3.3.14 Slide Switch Control Design Requirements

Smell

4.4.2.1 Olfaction

Snacks

7.2.2.2.2 Food Acceptability Design Considerations

Social

10.5.2 Galley and Wardroom Design Considerations

Social factors

8.6.2 Envelope Geometry Design Considerations

Soft-latching connectors

11.10.3.3 Structural Connectors Design Requirements

Software

2.3.2 Standardization Design Requirements

Solar cosmic radiation

5.7.2.1.2.3 Solar Cosmic Rays

Solar cosmic rays

5.7.2.1.4.5 Radiation Fields in Polar and Geosynchronous Orbit

Solar emissions

5.7.3.1.2 Sources of Non-Ionizing Radiation

Solar flares

5.7.2.1.2.3 Solar Cosmic Rays
5.7.3.1.2 Sources of Non-Ionizing Radiation
14.2.2.10 EVA Radiation Dosage Design Considerations

Solar rays

5.7.2.1.2.3 Solar Cosmic Rays

Solid-borne vibration

5.5.2.2 Vibration Propagation Design Considerations

Sound pressure levels

5.4.2 Acoustics Design Considerations

South Atlantic Anomaly

5.7.2.1.2.1 Trapped Radiation Belts

Space

8.12.2.3 Psychological Effects Design Considerations

Space Adaptation Syndrome

4.5.2.2 Space Adaptation Syndrome
7.2.2.2.2 Food Acceptability Design Considerations

Space medical facility

10.9 Space Medical Facility

Space medical facility design

10.9.3 Space Medical Facility Design Requirements

Space medical facility equipment

10.9.2.2 Functions of the SMF Design Considerations
10.9.2.3 Crewmember Skills - Design Considerations
10.9.3.2 Equipment Requirements

Space medical facility functions

10.9.2.2 Functions of the SMF Design Considerations

Space medical facility laboratory

10.9.3.2.5 Laboratory

Space medical facility monitoring

10.9.3.2.2 Environmental Monitoring Equipment

Space medical facility size

10.9.2.1 Factors That Determine Health Care Needs-Design Considerations

Space motion sickness

7.2.3.4.2 Nonexercise Countermeasures Design Considerations
7.2.3.4.3 Nonexercise Countermeasures Design Requirements

Spacing

9.5.3.1.14.10 Spacing Design Requirements

Spare equipment

12.3.3 Maintenance Information Management Systems Design Requirements

Spare equipment inventory

12.3.3 Maintenance Information Management Systems Design Requirements

Spatial disorientation

4.5.2.1 Spatial Disorientation

Speaker side tone

9.3.3.5 Speech Transmission Equipment Design Requirements

Special tools

11.2.3.2 Tool Commonality Design Requirements

Specialized workstation

9.2.5 Specialized Workstations

Specular reflectance

8.13.3.2.2 Reflected Glare Design Requirements
11.11.3.1.2 Surface Reflections

Speech

5.1.2.1.4.3 Vocal Factors Design Considerations

Speech communication

5.4.2.4.3 Annoyance Criteria Considerations

Speech generation

9.4.3.2 Audio Displays Design Considerations

Speech intelligibility

5.1.2.1.4.3 Vocal Factors Design Considerations
5.4.2.4.2.1 Direct Voice Communications Criteria Considerations
5.4.2.4.2.2 Indirect Voice Communications Criteria Considerations
9.4.3.2 Audio Displays Design Considerations

Speech interference levels

5.4.2.3.2 Performance Effects of Noise

Speech transmission

9.3.3.5 Speech Transmission Equipment Design Requirements

Spelling

9.6.3.4.4 Design Requirements for Error Handling

Spinal length

3.3.5.2 Body Surface Area Design Considerations

Spinner handle

9.3.3.3.5 Handwheel Design Requirements

Squelch controls

9.3.3.6 Operating Controls for Voice Communication Equipment Design Requirements

Stacked command errors

9.6.3.4.4 Design Requirements for Error Handling

Staggered rows of connectors

11.10.3.6 Connector Arrangement Design Requirements

Stainless steel

7.2.7.2.2.1 Toxicological Monitoring Design Considerations

Standard tools

11.2.3.2 Tool Commonality Design Requirements

Standardization

2.2.2 Standardization Design Considerations
13.3.2 Inventory Control Design Considerations

Static anthropometry

3.3.3.2.1 Gravity Condition Design Considerations

Static charge protection

6.4.3.11 Static discharge protection Requirements

Static push force

4.9.3 Strength - Design Requirements

Status message characteristics

9.6.3.4.3.2 Design Requirements for System Status Messages

Status messages

9.6.3.4.3.1 Design Considerations for System Status Messages

Stoke width

9.5.3.1.14.8 Stroke Width Design Requirements

Stops

9.3.3.1 General Requirements

Storage

9.3.3.4.6 Stylus and Grid Design Requirements
10.7.2 Recreation Facility Design Considerations
10.8.2 Microgravity Countermeasure Facility Design Considerations

Storage areas

10.12.2 Stowage Facility Design Considerations

Storage facilities

10.12.2 Stowage Facility Design Considerations

Stored data

9.6.3.1.8.3 Design Requirements for Default Values for Data Forms

Stored energy devices

6.3.3.10 Mechanically Stored Energy Requirements

Stowage

9.3.3.4.4 Mouse Design Requirements
10.12 Stowage Facility
13.3.2 Inventory Control Design Considerations
13.4.3.2 Hardcopy Information Management Design Requirements

Stowage container labeling

9.5.3.1.9 Stowage Container Labeling Design Requirements

Stowage container list

9.5.3.1.9 Stowage Container Labeling Design Requirements

Stowage containers

10.12.3 Stowage Facility Design Requirements

Stowage drawer design

11.3.3.3 Stowage Drawer Design Requirements

Stowage drawers

11.3.1 Introduction
11.3.2 Drawer and Rack Design Considerations
11.3.3.2 Design Requirements Common to Both Stowage & Equipment Drawers

Stowage items

10.12.3 Stowage Facility Design Requirements

Stowage location maps

13.3.2 Inventory Control Design Considerations

Stowage locations

10.12.3 Stowage Facility Design Requirements
11.2.3.4 Tool Stowage Design Requirements

Straps

11.7.3.4 *Example Equipment Restraint Design Solutions*

Stray light protection

8.13.3.1.4 Illumination Levels for Dark Adaptation Design Requirements

Strength

4.9 Strength
4.9.3 Strength - Design Requirements

Stress

8.12.2.3 Psychological Effects Design Considerations

Stress precautions

5.9.2 Combined Environmental Effects Design Considerations

Stressors

5.9.2 Combined Environmental Effects Design Considerations

Striae

11.11.3.1.6 Bubbles Seeds

Strike envelope

3.3.3.3.2 Strike Reach Envelope Data Design Requirements

Structural connectors

11.10.3.3 Structural Connectors Design Requirements

Stylus

9.3.2.2 Computer Input Devices - Design Considerations
9.3.3.4.6 Stylus and Grid Design Requirements

Subdivided containers

9.5.3.1.9 Stowage Container Labeling Design Requirements

Subscript

9.5.3.1.14.5 Special Character Design Requirements

Subtasks

9.2.2.1.1 Human/Machine Task Division Design Considerations

Sun shades

11.11.3.3 Visual Protection Design Requirements

Sun shields

11.11.3.3 Visual Protection Design Requirements

Sunglasses

11.13.2.3 Personal Ancillary Equipment Design Requirements

Superscript

9.5.3.1.14.5 Special Character Design Requirements

Supplemental lighting

8.13.2.3 Placement of Sources Design Considerations
8.13.2.4 Light Distribution Design Considerations
8.13.3.6 Workstation Illumination Design Requirements

Surface contamination

13.2.2 Housekeeping Design Considerations

Surface parallelism

11.11.3.1.3 Optical Characteristics

Surface reflection

8.13.3.2.2 Reflected Glare Design Requirements
11.11.3.1.2 Surface Reflections

Surface temperatures

6.5.3 Thermal Hazards Design Requirements

Surface touch temperature limits

6.5.2 Thermal Hazards Design Considerations
6.5.3 Thermal Hazards Design Requirements

Surfaces

6.3.3.9 Burrs Requirements
8.4.2 Orientation Design Considerations
8.13.3.2.2 Reflected Glare Design Requirements

Surgery

10.9.3.2.8 Surgery/Anesthesia Equipment

Surgical lighting

8.13.3.5 Medical Lighting Requirements

Sweat rate

5.8.2 Thermal Environment Design Considerations

Switch activation

9.3.3.3.7 Toggle Switch Design Requirements
9.3.3.3.7 Toggle Switch Design Requirements

Switch operation speed

4.7.2 Reaction Time - Design Considerations

Switches

9.3.3.4.1.2 General

Symbolic code

9.6.2.6.1 Design Considerations for Coding

Symbology

9.5.2 Labeling and Coding Design Considerations

Symbols

9.6.2.6.2 Design Requirements for Coding

System change message

9.6.3.4.3.2 Design Requirements for System Status Messages

System level macros

9.6.3.1.10.2 Design Requirements for User-definable Macros

System status messages

9.6.3.4.3 System Status Messages

Table

10.5.3.2 Food Selection Preparation Consumption-Design Requirements
10.6.4 Example Facility Design Solution

Table organization

9.6.2.4.3.2 Design Requirements for Matrix Tables

Table readability

9.6.2.4.3.2 Design Requirements for Matrix Tables

Tables

9.6.2.4 Tables
9.6.2.4.1 Design Considerations for Tables

Tabs

9.6.3.2.1 Design Requirements for Position Designation (Cursor)

Target size

9.4.2.3.3.9 Visual Display Terminal (VDT) Design Requirements

Task

9.6.2.1 Design Considerations for Data Display

Task analysis

9.2.2.1.1 Human/Machine Task Division Design Considerations

Task division

9.2.2.1.1 Human/Machine Task Division Design Considerations

Taste

4.4. Olfaction and Taste
4.4.2.2 Taste

Telemetry

13.3.3.1 General Inventory Control Design Requirements

Temperature

6.7.4 Short Duration Exposure
8.12.2.3 Psychological Effects Design Considerations
10.6.2 Meeting Facility Design Considerations

Tempered window panes

11.11.3.1.3 Optical Characteristics

Temporary equipment restraints

11.7.3.2 Equipment Restraint Design Considerations

Temporary restraints

11.7.3.3 Equipment Restraint Design Requirements

Temporary stowage bags

11.7.3.4 Example Equipment Restraint Design Solutions

Tension loads

11.7.2.3.2.3 Foot Restraint Loads Design Requirements

Terminology

9.6.3.4.1 Design Requirements for Consistent Terminology

Test equipment

12.3.1.2 Physical Accessibility Design Requirements
12.3.2.1 Fault Detection and Isolation Design Requirements

Test points

12.3.2.2 Test Point Design Requirements

Testability

12.3.2 Testability Design Requirements

Testing

12.3.2 Testability Design Requirements

Tether attach points

11.7.2.3.3.2 Body Restraint Loads Design Requirements

Tether attachments

11.7.2.3.3.1 Body Restraint Donning/Doffing Design Requirements
11.7.2.3.3.2 Body Restraint Loads Design Requirements

Tethered equipment

9.5.3.1.5 Alignment Marks/Interface Identification Design Requirements

Tethers

11.6.3.1 General Handle and Grasp Area Design Requirements
11.6.3.2 Handle and Grasp Area Location Design Requirements
11.7.2.3.3.4 Body Restraint Dimensional Design Requirements
11.7.3.3 Equipment Restraint Design Requirements
11.7.3.4 Example Equipment Restraint Design Solutions
11.8.3.1 Equipment Mobility Aid Design Considerations
14.1.3 General EVA Safety Design Requirements

Text

9.6.2.3 Text
9.6.3.3.1.1 Design Considerations for Editing
9.6.3.3.1.2 Design Requirements for Editing

Text display

9.6.2.3.2 Design Requirements for Text

Texture

8.12.2.2 Decorative Technique Design Considerations

Thermal conductivity

5.1.2.1.4.2 Thermal Factors Design Considerations

Thermal environment

5.8 Thermal environment
10.7.3 Recreation Facility Design Requirements

Thermal environment control

5.8.3.2 Thermal Monitoring and Control Design Requirements

Thermal environment monitoring

5.8.3.2 Thermal Monitoring and Control Design Requirements

Thermal tolerance

5.8.2.2.3 Human Performance in Heat - Design Considerations

Thermoregulation

5.8.2.2.2 Thermoregulation by the Body - Design Considerations
5.8.2.2.3 Human Performance in Heat - Design Considerations

Threaded fasteners

11.9.2 Fastener Design Considerations
11.9.3.2 Hand-Actuated Fastener Design Requirements
11.9.3.3 Tool-Actuated Fastener Design Requirements

Threads

6.3.3.6 Screws and Bolts Requirements

Throw-away restraints

11.7.3.3 Equipment Restraint Design Requirements

Thumbwheel coding

9.3.3.3.2 Thumbwheel Control Design Requirements

Thumbwheel control

9.3.3.3.2 Thumbwheel Control Design Requirements

Tiled windows

9.6.3.1.7.5.1 Design Considerations for Interactions with Windows

Timer

9.4.2.3.3.5 Clock and Timer Design Requirements

Titles

9.5.3.1.14.4 Titles Design Requirements
9.6.2.4.1 Design Considerations for Tables
9.6.2.4.1 Design Considerations for Tables
9.6.2.4.2 Design Requirements for Tables
9.6.2.8 Design Requirements for Format

Toggle switch operating force

9.3.3.3.7 Toggle Switch Design Requirements

Toggle switch orientation

9.3.3.3.7 Toggle Switch Design Requirements

Toggle switches

9.3.3.3.7 Toggle Switch Design Requirements

Tone

5.4.3.2.3.2 Narrow-Band Annoyance Noise Exposure Requirements

Tool

12.3.1.2 Physical Accessibility Design Requirements

Tool access

11.2.3.6 Tool Access Design Requirements

Tool actuated fasteners

11.9.2 Fastener Design Considerations
11.9.3.1 General Fastener Design Requirements
11.9.3.3 Tool-Actuated Fastener Design Requirements
11.9.3.4 IVA Fastener Design Requirements

Tool actuation force

11.2.3.1.3 Tool Actuation Forces and Direction of Action Design Requirements

Tool caddy

11.2.2 Tool Design Considerations

Tool carriers

11.2.3.3 Tool Tethering/Retention Design Requirements

Tool clearance

11.9.2 Fastener Design Considerations

Tool commonality

11.2.2 Tool Design Considerations

Tool design

11.2.3 Tool Design Requirements

Tool disassembly

11.2.3.3 Tool Tethering/Retention Design Requirements

Tool finish

11.2.3.7 Special Tool Features Design Requirements

Tool handle

11.2.3.1.2 Tool Handedness Design Requirements

Tool handles

11.2.3.6 Tool Access Design Requirements

Tool head

11.2.3.6 Tool Access Design Requirements

Tool identification

11.2.3.5 Tool Labeling and Identification Design Requirements

Tool installation

11.2.3.1.2 Tool Handedness Design Requirements

Tool integration

11.2.3.1 Hand and Tool Integration Design Requirements

Tool inventory

11.2.2 Tool Design Considerations
11.2.3.4 Tool Stowage Design Requirements

Tool kit labels

11.2.3.5 Tool Labeling and Identification Design Requirements

Tool kit stowage

11.2.2 Tool Design Considerations

Tool kits

11.2.2 Tool Design Considerations
11.2.4.1 Example Manual Tools

Tool labels

11.2.3.5 Tool Labeling and Identification Design Requirements

Tool layout

11.2.3.4 Tool Stowage Design Requirements

Tool list

9.5.3.1.8 Operating Instruction Design Requirements

Tool names

11.2.3.5 Tool Labeling and Identification Design Requirements

Tool operation

11.2.3.1.2 Tool Handedness Design Requirements

Tool pouches

11.2.4.1 Example Manual Tools

Tool restraints

11.2.3.3 Tool Tethering/Retention Design Requirements

Tool retention

11.2.3.3 Tool Tethering/Retention Design Requirements

Tool stowage

11.2.3.4 Tool Stowage Design Requirements
11.2.4.1 Example Manual Tools

Tool tethering

11.2.3.3 Tool Tethering/Retention Design Requirements

Tool trays

11.2.4.1 Example Manual Tools

Tool unit standards

11.2.2 Tool Design Considerations

Tool use

11.2.2.2	Body Stabilization When Using Tool Design Considerations

Tools

11.2	Tools
11.2.4	Example Tool Design Solutions
11.5.3.1	General Mounting Design Requirements
11.7.3.3	Equipment Restraint Design Requirements
11.9.2	Fastener Design Considerations
11.9.3.3	Tool-Actuated Fastener Design Requirements
11.10.3.6	Connector Arrangement Design Requirements
12.3.1.1	General Maintainability Design Requirements
13.2.3.2	Surface Cleaning Design Requirements

Toothache

5.1.2.2.1.7.2	Trapped Gas Dysbarism Design Considerations

Torque

4.9.3	Strength - Design Requirements

Torquing

11.9.3.3	Tool-Actuated Fastener Design Requirements

Torsion loads

11.7.2.3.2.3	Foot Restraint Loads Design Requirements

Torso restraint

3.3.3.3.1	Functional Reach Design Requirements
11.7.2.3.4	Sleep Restraints Design Requirements

Total visual field

8.11.2.2	Window Configuration Design Considerations

Touch sensitive display

9.3.3.4.7	Touch-Sensitive Display Design Requirements

Touch temperature

6.5	Touch Temperature
11.8.2.2.5	Handhold and Handrail Temperature Design Requirements

Touch-sensitive devices

9.3.2.2	Computer Input Devices - Design Considerations

Toxic

5.1.2.1.4.1	Metabolic Factors Design Considerations
6.6.2	Fire Protection and Control Design Considerations

Toxicity

5.1.2.2.1.7.3	Toxic Gaseous Contaminants Design Considerations
10.5.3.3	Food Packaging and Stowage Design Requirements

Toxicological monitoring

5.1.2.3.1	Atmosphere Toxicological Monitoring Design Considerations

Track ball

9.3.3.4.5	Track Ball (Rolling Ball) Design Requirements
9.3.2.2	Computer Input Devices - Design Considerations

Traffic

8.3.2.1	General Adjacency Design Considerations
8.7	Traffic Flow
8.11.2.1	Location of Windows Within Space Module-Design Consideration
9.2.2.2.2	Congestion and Interference Design Requirements
9.3.3.2	Accidental Actuation Design Requirements
10.5.3.1	Overall Galley and Wardroom Layout - Design Requirements
11.3.3.1	Drawer and Rack Interfacing Requirements

Traffic congestion

8.7.3.2	Congestion Avoidance Design Requirements

Traffic flow

8.7.3.1	Overall Traffic Flow Design Requirements

Traffic regulations

8.7.3.4 Emergency and Escape Route Design Requirements

Transfer containers

10.3.3.2 Facilities for Other Waste Products Design Requirements
13.2.3.1 General Housekeeping Design Requirements

Transit time

8.2.3.1 Crew Station Arrangement and Grouping Design Requirements

Transition

8.3.2.2 Specific Adjacency Design Considerations
8.3.3.1 Adjacent Crew Station Design Requirements

Translation path

8.8.2 Translation Path Design Considerations
8.8.3.2 Clearances Design Requirements
8.8.3.3. Translation Path Obstructions and Hazards Design Requirements
8.7.2.1 Optimization of Traffic Flow Design Considerations
8.7.2.3 Equipment Transfer Design Considerations
8.7.3.2 Congestion Avoidance Design Requirements

Translation path marks

8.8.3.4 Marking of Translation Paths - Design Requirements

Translation path minimums

8.8.3.1 Minimum Translation Path Dimensions - Design Requirements

Translation rates

8.7.2.2 IVA Translation Rates Design Considerations

Transmissivity

11.11.2.1 Optical Characteristics Design Considerations

Transmittance

11.11.3.2.3 Transmittance

Transparent surfaces

9.2.5.2.2 Maintenance Workstation Design Requirements

Transverse vibration

5.5.3.2.1 Severe Discomfort Boundary
5.5.3.2.2 Decreased Proficiency Boundary
5.5.3.2.3 Reduced Comfort Boundary
5.5.3.3.1 Vibration Exposure Limit
5.5.3.3.2 Vibration Exposure Limit

Trapped radiation belts

5.7.2.1.2.1 Trapped Radiation Belts

Trash

10.5.3.4 Galley and Wardroom Cleaning - Design Requirements
10.11 Trash Management Facility
11.12.3 Packaging Design Requirements

Trash collection

11.12.3 Packaging Design Requirements

Trash disposal

11.12.3 Packaging Design Requirements

Trash facility

10.11 Trash Management Facility

Trash location

10.11.2 Trash Management Facility Design Considerations

Trash management

10.11.2 Trash Management Facility Design Considerations

Trash receptacles

10.11.2 Trash Management Facility Design Considerations
10.11.3 Trash Management Facility Design Requirements

Trash separation

10.11.2 Trash Management Facility Design Considerations

Trash sorting

10.11.3 Trash Management Facility Design Requirements

Tread lubricants

11.9.2 Fastener Design Considerations

Trend estimation

3.2.3.3 Secular Changes Design Considerations

Troubleshooting

12.3.2.2 Test Point Design Requirements

Truncation

9.6.3.1.3.2 Design Requirements for Command Language

Turbidity

7.2.7.2.2.3 Physical Monitoring Design Considerations

Tutorial display

9.4.5.1.2 Tutorial Display and Annunciation Requirements

Two-hand tasks

8.9.2.2 Considerations for Location of IVA Personnel Restraints

Two-joint movement

3.3.2.2.2 Multi-Joint Versus Single Joint Data Design Considerations

Type

9.5.3.1.14.1 Font Style Design Requirements

Ultrasonic noise

5.4.3.2.1.5 Infrasonic Long-Term Annoyance Noise Exposure Requirements

Ultraviolet

11.11.3.1.4 Optical Density
11.11.3.3 Visual Protection Design Requirements

Unambiguous signals

9.4.4.3.3 Visual Caution and Warning Display Design Requirements

Uncoated window panes

11.11.3.1.3 Optical Characteristics

Underlining

9.5.3.2 Coding Design Requirements

Unplanned EVA

14.1.2 General EVA Design Considerations

Unsafe atmosphere

5.1.2.2.1 Adaptive Physiological Responses Design Considerations
5.1.2.2.1.1 Hypoxia Design Considerations
5.1.2.2.1.5 Acute CO_2 Toxicity Design Considerations
5.1.2.2 Dangers Associated with Unsafe Atmospheres - Design Considerations

Updating information

9.6.2.9.2 Design Requirements for Information Display Rate

Upper case letters

9.5.3.1.14.3 Upper/Lower Case Design Requirements
9.6.3.2.1 Design Requirements for Position Designation (Cursor)
9.6.2.3.2 Design Requirements for Text

Upward acceleration

5.3.2.2.2 Subjective Effects of Linear Accelerations

Urine

10.3.2 Body Waste Management Facilities Design Considerations
10.3.3.1 Defecation and Urination Facilities Design Requirements

Urine collectors

10.3.4 Example Body Waste Management Facility Design

User feedback

9.6.3.4.2 User Feedback

9.6.3.4.2.1 Design Considerations for User Feedback

User guidance

9.6.3.4 Design Considerations for User Guidance

User input

9.6.4 User Input
9.6.4.2 Design Requirements for User Input

User interfaces

9.6.3.2 Design Requirements for Movement Within User Interfaces

User interrupts

9.6.3.5 Design Requirements for Sequence Control

User population

3.2.1 Anthropometric Database Design Considerations

User requested menus

9.6.3.1.6.1 Design Considerations for Menus
9.6.3.1.6.2 Design Requirements for Menus
9.6.3.1.6.3.2 Design Requirements for Permanent Menus
9.6.3.1.6.4 User-Requested Menus
9.6.3.1.6.4.2 Design Requirements for User-Requested Menus

User-computer dialogue techniques

9.6.3.1.2 Design Requirements for User-Computer Dialogues

User-computer interaction

9.6 User-computer interaction

User-definable macros

9.6.3.1.10 User-definable Macros

User/computer dialogue

9.6.3.1 User-Computer Dialogues

User/computer dialogue types

9.6.3.1.2 Design Requirements for User-Computer Dialogues

User/computer interface

13.4.3.3 Electronic Information Management Design Requirements

Utensils

10.5.2 Galley and Wardroom Design Considerations
10.5.3.2 Food Selection Preparation Consumption-Design Requirements

Utility connections

11.3.3.4 Equipment Drawer Design Requirements

Utility wipes

13.2.2 Housekeeping Design Considerations

VDT

9.2.4.2.2 Visual Space Design Requirements

Vacuum cleaner

13.2.3.3 Vacuum Cleaning Design Requirements
13.2.4 Example Housekeeping Design Solutions

Valve controls

9.3.3.3.3 Valve Control Design Requirements

Valve handle

9.3.3.3.3 Valve Control Design Requirements

Van Allen Belts

5.7.2.1.2.1 Trapped Radiation Belts

Vaporization

5.8.2.2.1 Modes of Heat Exchange - Design Considerations
6.7.5 Vaporization of Tissue Fluids

Variable amplitude vibration

5.5.3.3.4 Vibration Duration

Vehicle axis orientation

9.5.3.1.7 Location and Orientation Coding Design Requirements

Velcro

11.7.3.3 Equipment Restraint Design Requirements
11.7.3.4 Example Equipment Restraint Design Solutions

Ventilation

5.8.2.2.2.1 Microgravity Effects on the Thermal Environment
5.8.2.2.5 Special Ventilation & Metabolic Heat Removal Design Considerations
10.6.2 Meeting Facility Design Considerations
10.7.2 Recreation Facility Design Considerations
10.8.3.4 Exercise Environment Design Requirements

Ventilator

10.9.3.2.4 Medical Life Support

Venting

6.6.2 Fire Protection and Control Design Considerations

Verbal alarm criteria

9.4.4.3.4.3 Verbal Alarm Signal Design Requirements

Verbal alarm intensity

9.4.4.3.4.3 Verbal Alarm Signal Design Requirements

Verbal alarm signals

9.4.4.3.4.3 Verbal Alarm Signal Design Requirements

Vertical vibration

5.5.2.1 Vibration Environments Design Considerations

Vestibular alterations

5.2.2.1 Physiological Effects of Microgravity

Vestibular side effects

7.2.3.4.2 Nonexercise Countermeasures Design Considerations

Vestibular system

4.5 Vestibular System

Vibration

4.2.2 Vision - Design Considerations
5.4.2.2 Propagation of Noise - Design Considerations
5.5 Vibration
8.3.2.1 General Adjacency Design Considerations
9.4.2.3.1.4 Vibration Design Requirements
10.4.3 Individual Crew Quarters Design Requirements
10.8.3.4 Exercise Environment Design Requirements

Vibration accelerations

5.5.2.4.1 Vibration Direction Criteria Design Considerations
5.5.2.4.3 Vibration Exposure Criteria Design Considerations (1 to 80 Hz)
5.5.3.2.3 Reduced Comfort Boundary

Vibration acceleration limits

5.5.3.2.1 Severe Discomfort Boundary
5.5.3.3.1 Vibration Exposure Limit
5.5.3.3.2 Vibration Exposure Limit

Vibration comfort scale

5.5.2.3.3 Discomfort/Annoyance Effects of Vibration

Vibration control

5.5.4	Example Vibration Design Solutions
5.5.4.2	Control of Vibration - Path Transmission

Vibration design

5.5.3.1	General Vibration Design Requirements

Vibration discomfort symptoms

5.5.2.3.3	Discomfort/Annoyance Effects of Vibration

Vibration duration

5.5.2.1	Vibration Environments Design Considerations
5.5.3.2.4	Vibration Duration
5.5.3.3.4	Vibration Duration

Vibration effects

5.5.2.3	Human Responses to Vibration - Design Considerations

Vibration environment

5.5.2	Vibration Design Considerations
5.5.2.1	Vibration Environments Design Considerations
5.5.2.1.1	Launch Phase Vibration Environment

Vibration environmental parameters

5.5.3	Vibration Design Requirements

Vibration exposure

5.5.2.4.2	Vibration Exposure Criteria Design Considerations (0.1 to 1 Hz)
5.5.3.3	Vibration Exposure (1 to 80 Hz) Design Requirements

Vibration exposure limits

5.5.2.4.3	Vibration Exposure Criteria Design Considerations (1 to 80 Hz)

Vibration exposure times

5.5.2.4.4	Vibration Duration Criteria Design Considerations

Vibration limits

5.5.2.4.4 Vibration Duration Criteria Design Considerations

Vibration measurement

5.5.3.1 General Vibration Design Requirements

Vibration paths

5.5.2.2 Vibration Propagation Design Considerations
5.5.4.2 Control of Vibration - Path Transmission

Vibration protection

5.5.4.3 Vibration Protection

Vibration resonant frequency region

5.5.2.3.1 Physiological Effects of Vibration

Vibration sources

5.5.4.1 Vibration Control at the Source

Videotape

1.4.3.5 Videotape User's Guide

View ports

11.11 Windows

Viewing areas

8.13.3.6 Workstation Illumination Design Requirements

Viewing distance

9.2.4.2.2 Visual Space Design Requirements
9.4.2.3.3.2 Large Screen Display Design Requirements

Viewing windows

11.11.3.1 General Viewing Window Requirements

Visibility

11.5.3.1	General Mounting Design Requirements

Visible wavelengths

11.11.3.1.4	Optical Density

Vision

4.2	Vision
5.1.2.2.1.2	Night Vision Abnormalities Design Considerations
8.6.2	Envelope Geometry Design Considerations
9.2.4.2.2	Visual Space Design Requirements

Visual access

12.3.1.3	Visual Access Design Requirements

Visual acuity

5.5.3.2.2	Decreased Proficiency Boundary
5.5.3.3.1	Vibration Exposure Limit

Visual caution and warning displays

9.4.4.3.3	Visual Caution and Warning Display Design Requirements

Visual display terminal

9.4.2.2	Visual Display Design Considerations
9.4.2.3.3.9	Visual Display Terminal (VDT) Design Requirements

Visual displays

9.4.2	Visual Displays

Visual distractions

9.2.4.2.2	Visual Space Design Requirements

Visual indicator absence

9.4.2.3.2	Information Presentation Design Requirements

Visual orientation

8.4.2 *Orientation Design Considerations*
8.4.3 Orientation Design Requirements

Visual perception

4.2.2 Vision - Design Considerations

Visual problems

4.2.2 Vision - Design Considerations

Visual protection

11.11.2.2 Visual Protection Design Considerations
11.11.3.3 Visual Protection Design Requirements

Visual space

9.2.4.2.2 Visual Space Design Requirements

Visual spaciousness

8.6.2.2 Visual Design Considerations

Voice activation

9.3.2.2 Computer Input Devices - Design Considerations

Voice communication

5.4.2.4.2 Voice Communications Criteria Considerations

Voice communication criteria

5.4.3.2.2.1 Direct Voice Communications Noise Exposure Requirements

Voice frequencies

5.1.2.1.4.3 Vocal Factors Design Considerations

Volatile organics monitoring

5.1.3.3 Atmosphere Toxicological Monitoring Design Requirements

Volume allocations

8.6.4 Example Volume Allocations Design Solutions

Volume controls

9.3.3.6 Operating Controls for Voice Communication Equipment Design Requirement

Vomitus

10.3.2 Body Waste Management Facilities Design Considerations
10.3.3.2 Facilities for Other Waste Products Design Requirements

Waist restraint

3.3.3.2.3 Restraint Design Considerations

Wardroom

10.5 Galley and Wardroom

Warning alarm

9.4.4.3.1 Alarm Classification Design Requirements

Warning labels

6.2.2.2 Crew Induced Accidents
6.4.3.3.4 Warning Labels Requirements
6.4.3.3.5 Warning labels plus recessed connectors Requirements

Warning signals

9.4.3.3.1 General Design Requirements

Warning stripes

9.5.3.1.13 Caution and Warning Labels Design Requirements

Warp

11.11.3.1.3 Optical Characteristics

Wash receptacles

10.10.3 Laundry Facility Design Requirements

Washers

11.5.3.1 General Mounting Design Requirements

Washing

10.2.3.2 Whole Body Cleansing Design Requirements

Waste facility

7.2.2.2.2 Food Acceptability Design Considerations

Waste management

8.6.4.3 Skylab Waste Management and Personal Hygiene Compartment
10.3.2 Body Waste Management Facilities Design Considerations

Wastewater

7.2.7.2.2.1 Toxicological Monitoring Design Considerations

Water

7.2.2.1 Introduction
7.2.2.2.3 Food and Water Quality and Quantity - Design Considerations
7.2.7.2.2.3 Physical Monitoring Design Considerations

Water color

7.2.7.2.2.3 Physical Monitoring Design Considerations

Water contaminant exposure

7.2.7.2.2.1 Toxicological Monitoring Design Considerations

Water monitoring

7.2.7.3.2.3 Microbiological Monitoring & Treatment - Design Requirements
7.2.7.3.2.4 Physical Monitoring - Design Requirements

Water odor

7.2.7.2.2.3 Physical Monitoring Design Considerations

Water parameters

7.2.7.2.2.3 Physical Monitoring Design Considerations

Water potability

7.2.7.3.2.3 Microbiological Monitoring & Treatment - Design Requirements

Water quality monitoring

7.2.7.2.2 Water Quality Monitoring Design Considerations
7.2.7.3.2 Water Supply Monitoring Design Requirements
7.2.7.3.2.1 Water Quality Monitoring Schedule Design Requirements

Water recycling

7.2.7.2.2.1 Toxicological Monitoring Design Considerations

Water sampling

7.2.7.3.2.3 Microbiological Monitoring & Treatment - Design Requirements

Water supply monitoring

7.2.7.2.2.3 Physical Monitoring Design Considerations

Water taste

7.2.7.2.2.3 Physical Monitoring Design Considerations

Water treatment bed

7.2.7.3.2.3 Microbiological Monitoring & Treatment - Design Requirements

Wavefront deformations

11.11.3.2.1 Material

Wedge angle

11.11.3.2.2 Optical Specifications

Weightlessness

3.2.3.1 Microgravity Effects Design Considerations
3.3.6.2 Body Volume Data Design Considerations

Wet bulb temperature

5.8.2 Thermal Environment Design Considerations

Wet wipes

13.2.3.2 Surface Cleaning Design Requirements
13.2.4 Example Housekeeping Design Solutions

Wet/Dry index

5.8.2 Thermal Environment Design Considerations

White level

8.13.3.1.4 Illumination Levels for Dark Adaptation Design Requirements

White light

8.13.2.1 Color of Light Source Design Considerations
8.13.3.1.1 General Interior Illumination Levels Design Requirements
8.13.3.3 Light Color Design Requirements

Whole body center of mass

3.3.7.3.2.1 Whole-Body Center of Mass Data Design Requirements

Whole body cleansing

10.2.3.2 Whole Body Cleansing Design Requirements

Whole body washing

10.2.3.2 Whole Body Cleansing Design Requirements

Wide band annoyance noise

5.4.3.2.3.1 Wide-Band Long-Term Annoyance Noise Exposure Requirements

Wide band hearing

5.4.3.2.1.1 Wide-Band Long-Term Hearing Conservation Noise Exposure Requirements

Wide band noise

5.4.2.4.1.1.1 Wide-Band Long-Term Hearing Conservation Considerations
5.4.3.2.1.1 Wide-Band Long-Term Hearing Conservation Noise Exposure Requirements
5.4.3.2.3.3 Wide-Band Short-Term Annoyance Noise Exposure Requirements

Window cleaning

11.11.2.4	Window Maintenance Design Considerations
11.11.3.5	Window Maintenance Design Requirements

Window configuration

8.11.2.2	Window Configuration Design Considerations

Window contamination

11.11.2.3	Physical Protection Design Considerations

Window covers

11.11.2.4	Window Maintenance Design Considerations
11.11.3.5	Window Maintenance Design Requirements

Window design

9.2.5..1.1	Window Workstation Design Considerations
11.11.2	Window Design Considerations
11.11.3	Window Design Requirements
11.11.3.3	Visual Protection Design Requirements
11.11.4	Example Window Design Solutions

Window dimensions

9.6.3.1.7.5.2	Design Requirements for Interactions with Windows

Window glazing

11.11.3.2.1	Material

Window inspections

11.11.2.3	Physical Protection Design Considerations

Window integration

8.11.3	Window Integration Design Requirements

Window location

8.11.2.1	Location of Windows Within Space Module-Design Consideration
8.11.3	Window Integration Design Requirements
9.6.3.1.7.5.2	Design Requirements for Interactions with Windows

Window maintenance

11.11.2.4	Window Maintenance Design Considerations
11.11.3.5	Window Maintenance Design Requirements

Window pane coatings

11.11.3.4	Physical Protection Design Requirements

Window pane surface

11.11.3.1.5	Surface Quality

Window panes

11.11.2.3	Physical Protection Design Considerations
11.11.3.1.3	Optical Characteristics
11.11.3.2	Scientific Window Design Requirements

Window protection

8.11.2.2	Window Configuration Design Considerations

Window replacement

11.11.3.4	Physical Protection Design Requirements
11.11.3.5	Window Maintenance Design Requirements

Window shape

8.11.2.2	Window Configuration Design Considerations
8.11.2.2	Window Configuration Design Considerations
9.2.5.1.2	Window Workstation Design Requirements
9.6.2.7.1	Design Considerations for Windows

Window size

9.6.2.7.1	Design Considerations for Windows
11.11.3.1.1	Window Size

Window space

8.11.3	Window Integration Design Requirements

Window surface

11.11.2.3	Physical Protection Design Considerations

Window surface contamination

11.11.3.4 Physical Protection Design Requirements

Window surfaces

11.11.3.2.1 Material

Window title

9.6.2.7.1 Design Considerations for Windows
9.6.2.7.2 Design Requirements for Windows

Window types

9.6.2.7.2 Design Requirements for Windows

Window width

9.6.2.7.1 Design Considerations for Windows

Window workstation

9.2.5.2.1 Maintenance Workstation Design Considerations

Window workstation use

9.2.5.1.1 Window Workstation Design Considerations

Windowing

9.4.2.3.3.9 Visual Display Terminal (VDT) Design Requirements

Windows

5.7.3.1.4 Non-Ionizing Radiation Protection Design Considerations
8.6.2.2 Visual Design Considerations
8.10.3.2 Pressure Hatch Indicator/Visual Display Design Requirements
8.11 Windows Integration
9.6.2.7 Windows
9.6.3.1.7.5 Interactions with Windows
10.4.3 Individual Crew Quarters Design Requirements
10.7.3 Recreation Facility Design Requirements
11.11 Windows

Wing head fasteners

11.9.3.4 IVA Fastener Design Requirements

Word spacing

9.5.3.1.14.10 Spacing Design Requirements

Workload

4.10 Workload

Workstation anthropometrics

9.2.4.2.1 Workstation Anthropometric Design Requirements

Workstation configuration

9.2.2.1.3 Layout Design Considerations

Workstation design

9.2.4.2.1 Workstation Anthropometric Design Requirements

Workstation illumination

8.13.3.6 Workstation Illumination Design Requirements
9.2.2.2.1 Workstation Illumination Design Requirements

Workstation layout

9.2 Workstation layout
9.2.4.2.1 Workstation Anthropometric Design Requirements

Workstation lighting

8.13.3.5 Medical Lighting Requirements
9.4.2.3.1.1 Illumination Design Requirements

Workstation orientation

9.2.2.2.3 Orientation Design Requirements

Workstation restraints

9.2.4.2.3 Workstation Restraints and Mobility Aid Design Requirements

Workstation size

8.6.3.1 Crew Station Body Envelopes Design Requirements

Workstations

9.0 Workstations
9.2.4.2.1 Workstation Anthropometric Design Requirements
13.4.3.1 General Information Management Design Requirements

X outputs

9.6.4.4 Design Requirements for Interactive Control

X, y-axis vibration

5.5.3.2.4 Vibration Duration
5.5.3.3.4 Vibration Duration

X-Y-Z control outputs

9.6.4.4 Design Requirements for Interactive Control

Y outputs

9.6.4.4 Design Requirements for Interactive Control

Z-axis vibration

5.5.3.2.4 Vibration Duration
5.5.3.3.4 Vibration Duration

Zero order control

9.3.3.4.5 Track Ball (Rolling Ball) Design Requirements

APPENDIX K
MSIS RECIPIENTS

Abbott, Hawks
Mail Code: C99
Company: Lockheed Martin

Aberg, John
Mail Code: EL02
Company: NASA Marshall Space Flight Center

Accola, A.
Mail Code: IB
Company: NASA Headquarters

Acres, W. R.
Mail Code: ES5
Company: NASA Johnson Space Center

Adams, Ken
Mail Code: 501-4
Company: NASA Lewis Research Center

Adams, Richard H.
Mail Code:
Company: Central Research Laboratories

Adams, Bob
Mail Code: DF-42/RSO
Company: NASA Johnson Space Center

Adams, Ann
Mail Code: 111113-ABA
Company: Jet Propulsion Laboratory

Adlis, L.
Mail Code: KM31
Company:

Adolf, Jurine
Mail Code: C81
Company: Lockheed Martin

Agena Bldg, MIC Library/
Mail Code:
Company: Martin Marietta Services

Aghili, Reza
Mail Code: B14
Company: Lockheed Martin

Ahmad, Taseer
Mail Code:
Company: Oxford Polytechnic

Ahmad, Taseer
Mail Code:
Company: Oxford Polytechnic

Ahmad, Taz
Mail Code:
Company: Oxford School of Architecture

Albjerg, Mariann
Mail Code: MT3
Company: NASA Johnson Space Center

Allgeier, Robert
Mail Code: ND513
Company: NASA Johnson Space Center

Allton, Charles
Mail Code: EC7
Company: NASA Johnson Space Center

Allton, John
Mail Code: EC 2
Company: NASA Johnson Space Center

Almedo, Chris
Mail Code:
Company: US Army Space Command

Alvarez, Manuel
Mail Code: AC 09
Company: Rockwell International

Amacher, Roy
Mail Code:
Company:

Ammerman, David
Mail Code:
Company: Fairchild Space

Amsbury, David L.
Mail Code: SN5
Company: NASA Johnson Space Center

Andean, J.D.
Mail Code:
Company: Communications Research Center

Anderson, Loy
Mail Code: C-95
Company: Rice Faculty (LESC Contractor)

Anderson, Charles D.
Mail Code: 33-HH
Company: Boeing Aerospace

Anderson, Charles R.
Mail Code:
Company: NASA Aerospace Education Services Project

Anderson, Sandy
Mail Code: EC/HAM
Company: NASA Johnson Space Center

Andino, Aureo F.
Mail Code:
Company:

Andino, Aureo F.
Mail Code:
Company: Universidad de Puerto Rico

Andrejak, Cathy
Mail Code:
Company: WSMC/PMET

Anselevicius, George
Mail Code:
Company: University of New Mexico

Anthes, Virginia
Mail Code: NS4
Company:

Anzalond, Jo
Mail Code:
Company: Life Systems, Inc.

Appleby, Matthew
Mail Code:
Company: Boeing Defense and Space

Arine, Robert
Mail Code: A3J051
Company: McDonnell Douglas Corporation

Armberter, G.
Mail Code: LESC/B-15
Company: NASA Johnson Space Center

Armstrong, Bob
Mail Code: KA21
Company: NASA Marshall Space Flight Center

Armstrong, Richard N.
Mail Code:
Company: U.S. Army Laboratory Command

Armstrong, Joan
Mail Code: FA53
Company: Rockwell International

Armstrong, C. H.
Mail Code: DF42
Company: NASA Johnson Space Center

Arno, Roger
Mail Code: 244-14
Company: NASA Ames Research Center

Aubin, Jeremy
Mail Code:
Company: University of Massachusetts-Boston

Aucoin, Pat
Mail Code: C19
Company: Lockheed

Austin, Foster
Mail Code: MSFC/EJ-12
Company: Johnson Engineering Corporation

Avans, Sherman
Mail Code: SA31
Company: NASA Marshall Space Flight Center

Avila, Manval
Mail Code: SE2
Company: NASA Johnson Space Center

Bach, Claudia
Mail Code:
Company: Document Center

Bachik, Rich
Mail Code: 9F-12
Company: Boeing Aerospace

Bacon, Pam
Mail Code: XE
Company: NASA Aerospace Education Services Project

Bacon, J. B.
Mail Code: ER2
Company: NASA Johnson Space Center

Badilla, Gloria
Mail Code: 301-456
Company: Jet Propulsion Laboratory

Badler, Norman I.
Mail Code: D2
Company: University of Pennsylvania

Bahr, Jeff
Mail Code:
Company: Martin Marietta Services

Bahr, Patricia A.
Mail Code: SM4
Company: NASA Johnson Space Center

Baiamonte, Frank
Mail Code: EP5
Company: NASA Johnson Space Center

Baird, R. S.
Mail Code: EP4
Company: NASA Johnson Space Center

Baisden, Denise
Mail Code: SD2
Company: NASA Johnson Space Center

Baker, A. W.
Mail Code: PT5
Company: NASA Johnson Space Center

Balke, John
Mail Code:
Company:

Ball, Edward W.
Mail Code:
Company: Micro Craft, Inc.

Bankaitis, H.
Mail Code: 501-4
Company: NASA Lewis Research Center

Barbe, Lewis C.
Mail Code:
Company: Safety Engineer

Barbour, Chuck
Mail Code: SP52
Company: NASA Johnson Space Center

Barfield, Woodrow
Mail Code: FU-20
Company: University of Washington

Barg, Michael
Mail Code:
Company: Payload Systems, Inc.

Barnett, James H.
Mail Code: SE
Company: NASA Johnson Space Center

Barrett, R.
Mail Code: 86-10
Company: NASA Lewis Research Center

Barron, D. A.
Mail Code: ER3
Company: NASA Johnson Space Center

Barrow, Kirk
Mail Code: 301-375
Company: Jet Propulsion Laboratory

Barry, T. D.
Mail Code: EV12
Company: NASA Johnson Space Center

Barry, Dan
Mail Code: CB
Company: NASA Johnson Space Center

Bartos, Linda
Mail Code: 6-2
Company: NASA Lewis Research Center

Bartz, Christopher
Mail Code:
Company: University of Houston

Bateman, R.P.
Mail Code:
Company: VEDA

Bates, J.R.
Mail Code: 6411
Company: Naval Weapons Center

Bates, William
Mail Code: OA
Company: NASA Johnson Space Center

Bates, Charles
Mail Code: HE 6570
Company: Aerospace Medical Research Laboratory

Bauer, Liz
Mail Code: SE2
Company: NASA Johnson Space Center

Beasley, B. A.
Mail Code: PR
Company: NASA Johnson Space Center

Bedini, Daniele
Mail Code:
Company: Futuro

Beecken, Julie
Mail Code: MA-203.42/
Company: U.S. Department of Energy

Beers, Kenneth
Mail Code:
Company: Wright State University

Belanger, D.
Mail Code: EP5
Company: NASA Johnson Space Center

Bell, Larry
Mail Code:
Company: University of Houston

Bell, Frank
Mail Code: NP/20
Company: General Electric

Bell, Larry
Mail Code:
Company: University of Houston

Bellardo, Karen
Mail Code: SP4 45102
Company: NASA Johnson Space Center

Beller, Arthur E.
Mail Code: TV-PEO-12
Company: NASA Kennedy Space Center

Beltran, Joe
Mail Code: RD6
Company:

Bendini, Daniele
Mail Code:
Company: FUTURO srl Think Tank & Marketing

Bennett, Greg
Mail Code: A96J18332
Company: McDonnell Douglas Corporation

Bentall, R.H.
Mail Code:
Company: European Space Agency

Benton, Sue
Mail Code:
Company: University of South Dakota

Bergey, Karl
Mail Code:
Company: AMI

Berki, J.
Mail Code: AOS-C
Company: NASA Lewis Research Center

Berkowitz, Jack
Mail Code:
Company: CTA, Inc.

Berman, Andrea
Mail Code: C81
Company: Lockheed Martin

Bermea, Edward A.
Mail Code: E023
Company: NASA Marshall Space Flight Center

Bernabeo, Alberto
Mail Code:
Company: Universita Di Bologna

Berner, Samuel
Mail Code:
Company:

Berryman, Don
Mail Code: DP4
Company: NASA Johnson Space Center

Berson, Barry L.
Mail Code:
Company: Lockheed California Company

Bertrand, Reinhold
Mail Code:
Company: University of Stuttgart

Best, Susan L.
Mail Code: EB44
Company: NASA Marshall Space Flight Center

Betts, Vicki
Mail Code: DA8/HEI
Company: NASA Johnson Space Center

Bick, Frank
Mail Code:
Company: U.S. Army Aviation Systems Command

Bifano, W.
Mail Code: 500-217
Company: NASA Lewis Research Center

Biggs, R. J. (Dick)
Mail Code: MSD/47-02
Company: LMSC/CA

Biggs, Patterson B.
Mail Code:
Company: NASA Aerospace Education Services Project

Bilbrough, Larry
Mail Code: XEE
Company: NASA Aerospace Education Services Project

Billica, Roger
Mail Code: SD2
Company: NASA Johnson Space Center

Billmayer, Hanns
Mail Code:
Company: Teledyne Brown Engineering

Bini, Dante N.
Mail Code:
Company: Binistar Incorporated

Birt, Joseph A.
Mail Code:
Company:

Bishop, Peter
Mail Code:
Company: Space Business Information Center

Bjorn, Valerie
Mail Code: SL/FIV
Company: Wright-Patterson Air Force Base

Blackburn, G. C.
Mail Code: EV12
Company: NASA Johnson Space Center

Blackwell, Janet
Mail Code:
Company: Tufts University

Blais, Thierry
Mail Code:
Company: SA MATRA - Space Branch

Blalock, J. D.
Mail Code: NB3
Company: NASA Johnson Space Center

Bleisath, Scott
Mail Code: DF42
Company: NASA Johnson Space Center

Blevins, D. R.
Mail Code: EA4
Company: NASA Johnson Space Center

Bloch, Marie Pierre
Mail Code:
Company: National Center of Special Studies

Blount, Robert
Mail Code: MA3/RSO
Company: Rockwell International

Blucker, T. J.
Mail Code: EG
Company: NASA Johnson Space Center

Bluth, B.J.
Mail Code: SSE
Company: NASA Headquarters

Boatman, Wayne
Mail Code: DJ2/LOR
Company: NASA Johnson Space Center

Bock, Otmar
Mail Code:
Company: Institute for Space and Terrestrial Science

Boeing Library, Acquisitions
Mail Code: HF50
Company: Boeing Support Services Tech. Library Catalog

Boff, Kenneth R.
Mail Code:
Company: A.F. Aerospace Medical Research Laboratory

Boggiatto, Dario
Mail Code:
Company: Aeritalia

Boggs, Helen
Mail Code:
Company: U.S. Army Missile Command

Bond, Robert L.
Mail Code: SP2
Company: NASA Johnson Space Center

Booher, Clete
Mail Code: SP2
Company: NASA Johnson Space Center

Booher, Harold H.
Mail Code:
Company: Department of the Army

Bordano, A. J.
Mail Code: EG11
Company: NASA Johnson Space Center

Borge, Greg
Mail Code: C34
Company: Lockheed

Boucek, George
Mail Code: 6H-PK
Company: Boeing Aerospace

Boucek, Jr., George P.
Mail Code: MS 156A
Company: NASA Langley Research Center

Boudreault, Richard
Mail Code:
Company: Oerlikon Aerospace

Bourland, Charles
Mail Code: SP44
Company: NASA Johnson Space Center

Bourland, Deborah
Mail Code: SP4
Company: NASA Johnson Space Center

Boutros, Ramsey
Mail Code: 6H-TX
Company: Boeing Aerospace

Bowman, Mark
Mail Code: SD5
Company: KRUG Life Sciences International

Bowman, Robert
Mail Code: 500-216
Company: NASA Lewis Research Center

Box, John
Mail Code: BT-37
Company: KRUG Life Sciences International

Boyce, J. B.
Mail Code: SD2
Company: NASA Johnson Space Center

Boyd, Max
Mail Code: SA31
Company: NASA Marshall Space Flight Center

Boyd, Susan
Mail Code: EL15
Company: NASA Marshall Space Flight Center

Boyles, Lawrence
Mail Code: B25
Company: Lockheed

Braak, Laurent
Mail Code:
Company: Centre National D' Estudes Spatiales

Bradford, Casie
Mail Code: 36-2
Company: Martin Marietta Services

Brady, S.
Mail Code: D150-11
Company: Lockheed Missiles & Space Co.

Bragg, Bobby J.
Mail Code: EP-5
Company: NASA Johnson Space Center

Brandli, A. E.
Mail Code: ER22
Company: NASA Johnson Space Center

Brantley, Kyle R.
Mail Code: HMF/P2
Company: KRUG Life Sciences International

Brauer, Mark M.
Mail Code:
Company: Lockheed (LADC)

Brauer, Mark M.
Mail Code:
Company: Texas A & M University

Braune, Jr., Rolf
Mail Code: 14-HC
Company: Boeing Aerospace

Bray, Juanita
Mail Code: C42
Company: Lockheed

Brazell, James W.
Mail Code:
Company: Georgia Tech

Bremmer, Dale A.
Mail Code:
Company: NASA Aerospace Education Services Project

Bremner, Patricia
Mail Code:
Company: Department of the Army

Brennan, Maggie
Mail Code:
Company:

Brewer, Dana
Mail Code: CD
Company: NASA Headquarters

Brisby, John
Mail Code:
Company: Science Application International Corporation

Brody, Adam
Mail Code: 244-19
Company: NASA Ames Research Center

Brogmus, George
Mail Code:
Company: Liberty Mutual Research Center for Safety/Heal

Broom, Julie
Mail Code: KL
Company: NASA Johnson Space Center

Brower, Tommy
Mail Code: T 7 K
Company: McDonnell Douglas Corporation

Brown, Jeri
Mail Code: SL
Company: NASA Johnson Space Center

Brown, Jeffery
Mail Code:
Company: University of Houston

Brown, George
Mail Code: T6G
Company: McDonnell Douglas Corporation

Brown, Tony
Mail Code:
Company: Tufts University

Brown, Helen
Mail Code: A3-135
Company: McDonnell Douglas Corporation

Brunk, S.
Mail Code: 351-4
Company: Honeywell

Bryan, Thomas
Mail Code: EB62
Company: NASA Marshall Space Flight Center

Bryan, F. L.
Mail Code: KG21
Company: NASA Johnson Space Center

Bryant, Tom
Mail Code:
Company: Bryant Research

Buchanan, Charles D.
Mail Code: TC2
Company: Rockwell Space Operations Company

Buck, Scott
Mail Code:
Company: U.S. Army

Buck, Courtney
Mail Code:
Company: McDonnell Douglass Aerospace Company

Buckenmaier, Chet
Mail Code:
Company: Computer Technology Associates

Bueker, Rick
Mail Code: SD-2
Company: NASA Johnson Space Center

Bullen, Steve
Mail Code: F6F4S
Company: Loral/Calspan

Bullock, R. L.
Mail Code: EC
Company: NASA Johnson Space Center

Buning, Harm
Mail Code:
Company: University of Michigan

Burns, Frederick T.
Mail Code: MH
Company: NASA Johnson Space Center

Burov, Alexander
Mail Code:
Company: Head of the Dept. of Ergonomics

Burtzlaff, I. J.
Mail Code: EK11
Company: NASA Johnson Space Center

Butler, Keith
Mail Code: 7L-40
Company: Boeing Aerospace

Cacioppo, Anthony J.
Mail Code:
Company: Wright State University

Calcaterra, Lori
Mail Code:
Company: St. Louis University

Campbell, Wendy
Mail Code: LRG
Company: A.F. Human Research Laboratory

Campbell, Paul D.
Mail Code: C44
Company: Lockheed

Cannon, Robert
Mail Code:
Company: Stanford University

Cantu (Library), P.
Mail Code: Link I-1s2
Company: NASA Johnson Space Center

Caradec, Paul
Mail Code: C42
Company: Lockheed

Cardo, Elizabeth
Mail Code:
Company: AIL Systems, Inc.

Carney, Mary
Mail Code: 235
Company: Loral Electro-Optical Systems

Carr, Gerald
Mail Code:
Company: CAMUS, Inc.

Carr, Nellie
Mail Code: DH64
Company: NASA Johnson Space Center

Carter, Richard
Mail Code:
Company: Oak Ridge National Laboratories

Cartwright, Tim
Mail Code:
Company: British Aerospace Public Limited Co.

Casaburri, Angelo A.
Mail Code:
Company: NASA Aerospace Education Services Project

Casey, Steve
Mail Code:
Company: Ergonomics Systems Design, Inc.

Cash, Martha
Mail Code: EO23
Company: NASA Marshall Space Flight Center

Cassano, Anthony
Mail Code: MS 875
Company: Perkin-Elmer Corporation

Casserly, Terry
Mail Code:
Company: Honeywell

Casteel, Mike
Mail Code: SD4/KI
Company: KRUG Life Sciences

Castle, Daniel
Mail Code:
Company: University of Idaho

Chaffee, Norman H.
Mail Code: OC
Company: NASA Johnson Space Center

Chafin, Roy L.
Mail Code:
Company: Jet Propulsion Laboratory

Chaikin, Jerry
Mail Code:
Company:

Chaikin, Gerald
Mail Code:
Company: Ergonomics Standards and Applications

Chambers, Randall M.
Mail Code:
Company: Wichita State University

Chambliss, J. P.
Mail Code: OB
Company: NASA Johnson Space Center

Chapanis, Alphonse
Mail Code:
Company: Industrial & Human Factors Consulting Services

Charles, John
Mail Code: SD-5
Company: NASA Johnson Space Center

Charpentier, Gary
Mail Code: HS-30
Company: Grumman Aerospace Corporation

Chassay, Charles E.
Mail Code: MT2
Company: NASA Johnson Space Center

Cheli, Marianne
Mail Code: SP34
Company: European Space Agency

Chen, Jen-Gwo
Mail Code:
Company: University of Houston

Chen, Alexander
Mail Code:
Company: Scientific Research Associates

Chen, Chen
Mail Code: C33
Company: Lockheed

Cheng, Leida
Mail Code:
Company: Mechanical Technology Incorporated

Chittenden, Connie
Mail Code:
Company: SRI, International

Choi, Janet
Mail Code: 244-19
Company: NASA Ames Research Center

Chrisman, Steve
Mail Code: C81
Company: Lockheed

Christensen, Julien M.
Mail Code:
Company: Universal Energy Systems

Christman, Linda
Mail Code:
Company: Martin Marietta Services

Chu, Yee Yeen
Mail Code:
Company: Perceptronics Inc.

Chucker, Steve
Mail Code: 11-3
Company: McDonnell Douglas Corporation

Ciarrocci, Carl
Mail Code:
Company:

Ciciora, John
Mail Code:
Company: Johnson Engineering Corporation

Cirillo, William M.
Mail Code: 288
Company: NASA Langley Research Center

Cisneros, Christie
Mail Code:
Company: Global Engineering Documents

Clark, Porter
Mail Code: EB33
Company: NASA Marshall Space Flight Center

Clark, Eric
Mail Code: F6F6S
Company: Loral/Calspan

Clarkin, Teresa
Mail Code:
Company: Honeywell

Claude, Poher
Mail Code: CNES/RA/AF
Company: Centre National D' Estudes Spatiales

Clearwater, Yvonne
Mail Code: 262-1
Company: NASA Ames Research Center

Cleland, John
Mail Code:
Company: Research Triangle Institute

Clement, Warren F.
Mail Code:
Company: Systems Technology, Inc.

Clement, Darrell
Mail Code: 27/LOR
Company: Loral Space Information Systems

Cliffton, Ethan
Mail Code:
Company: Architect

Clifton, Ethan Wilson
Mail Code:
Company: Ethan Wilson Clifton Architect

Coblentz, Alex
Mail Code:
Company: University Rene Descartes

Coblentz, R. E.
Mail Code: EV5
Company: NASA Johnson Space Center

Cohen, Marc M.
Mail Code: 240-10
Company: NASA Ames Research Center

Cohen, Jack
Mail Code: B90
Company: Lockheed

Cole, Robert E.
Mail Code:
Company: University of Hawaii

Cole, C. R.
Mail Code: 342 DA19
Company: Rockwell International

Cole, Chris
Mail Code: EC4
Company: NASA Johnson Space Center

Cole, Christine
Mail Code: EC 4
Company: NASA Johnson Space Center

Coleman, Bill
Mail Code:
Company: Computer Technology Associates

Coleman, Dick
Mail Code: T3J
Company: McDonnell Douglas Corporation

Coleman, Gene
Mail Code:
Company: University of Houston at Clear Lake

Colford, Nicholas
Mail Code:
Company:

Colgan, Kathleen
Mail Code: CB
Company: NASA Johnson Space Center

Comer, Melodie
Mail Code:
Company: Software Productivity Solutions

Companion, Michael
Mail Code:
Company: University of Central Fl. Research Center

Comstock, Ray
Mail Code: LaRC/152D
Company: NASA Langley Research Center

Congleton, J.
Mail Code:
Company: Texas A & M University

Conley, James
Mail Code:
Company: Presearch Inc.

Connolly, Jim
Mail Code: 240A-3
Company: NASA Ames Research Center

Connolly, John
Mail Code: SN2
Company: NASA Johnson Space Center

Connor, Bill
Mail Code:
Company: Delta Air Lines, Inc.

Connors, Mary
Mail Code: ARC/262-1
Company: NASA Ames Research Center

Coody, M.C.
Mail Code: EA44
Company: NASA Johnson Space Center

Coogler, Kathie
Mail Code:
Company: Georgia Tech Research Institute

Cook, John
Mail Code:
Company: Morris Architects

Cooke, John
Mail Code:
Company: University of Houston

Cooper, Frank W.
Mail Code: 8510
Company: Westinghouse Electric Corp.-COMET Program

Cooper, N. R.
Mail Code: BF11
Company: NASA Johnson Space Center

Cope, Jamie
Mail Code:
Company: Texas Chriopractic College Library

Copper, Susan
Mail Code: HEI
Company: Hernandez Engineering

Cordes, Ed
Mail Code: T-6
Company: McDonnell Douglas Corporation

Costello, Carl
Mail Code:
Company: AIAS

Costello, T. A.
Mail Code: EE4
Company: NASA Johnson Space Center

Cothran, Charlie
Mail Code: EJ12
Company: NASA Marshall Space Flight Center

Cothren, Charles
Mail Code: EL83
Company: NASA Marshall Space Flight Center

Cotter, Susan
Mail Code: HS-50
Company: McDonnell Douglas Corporation

Counter, Doug
Mail Code: ED33
Company: NASA Marshall Space Flight Center

Counts, Barbara
Mail Code: EC6
Company: Hamilton Standard Div. UTC

Cousineau, Jacky
Mail Code: DPSCU4349
Company: National Defense Headquarters

Covington, Clarke
Mail Code: JA
Company: NASA Johnson Space Center

Covitch, Sandy
Mail Code:
Company: The Information Specialists

Cowings, Patricia S.
Mail Code: 239A-2
Company: NASA Ames Research Center

Cowings, Keith
Mail Code:
Company: AIBS

Cox, William J.
Mail Code:
Company: Aviation Systems Concepts, Inc.

Coyle, S. D.
Mail Code: Grumman/B1
Company: NASA Johnson Space Center

Craig, Mark K.
Mail Code: KA
Company: NASA Johnson Space Center

Cranford, Theodore
Mail Code: AJ01
Company: Rockwell International

Crawford, Eric
Mail Code: ASD/YFEE
Company: U.S. Air Force

Crenshaw, Mark A.
Mail Code: M.Z. 5969
Company: General Dynamics

Crevier, Roger P.
Mail Code:
Company: Central Connecticut State University

Cristol, Sam
Mail Code: DF62/BAR
Company: Barrios Technology

Croomes, Scott
Mail Code: EJ13
Company: NASA Marshall Space Flight Center

Crosier, William G.
Mail Code: SD5/KI
Company: KRUG Life Sciences International

Crosson, Dudley
Mail Code:
Company: Delta P

Crowley, Bill
Mail Code:
Company: Reimer's Engineering Inc.

Crowley, S.
Mail Code: 50-3
Company: NASA Lewis Research Center

Croxall, Richard A.
Mail Code:
Company: TRW

Crumbley, Bob
Mail Code: EJ13
Company: NASA Marshall Space Flight Center

Cruz, Santana
Mail Code: ES22
Company: NASA Johnson Space Center

Cuhlman, Joey
Mail Code: JM12
Company: NASA Johnson Space Center

Cullingford, Hatice
Mail Code: XE
Company: NASA Johnson Space Center

Culpepper, W. X.
Mail Code: EV13
Company: NASA Johnson Space Center

Curtain, James
Mail Code:
Company: McDonnell Astronautics Co.

Cuta, Frank
Mail Code:
Company: Battelle Northwest

Czerwinski, Barbara Shelden
Mail Code:
Company: University of Texas Health Science Center

Czerwinski, Barbara
Mail Code:
Company: University of Texas Health Science Center

Dadabo, Cheryl
Mail Code:
Company: Embry-Riddle Aeronautical University

Daga, Andrew W.
Mail Code:
Company: Integrated SpaceSystems Corporation

Dagen, James
Mail Code: ES4
Company: NASA Johnson Space Center

Daily, Dick
Mail Code: 213-15
Company: NASA Ames Research Center

Daniel, Chuck
Mail Code: EJ12
Company: NASA Marshall Space Flight Center

Darney, Bob
Mail Code: C44
Company: Lockheed

Data Bank, IBM/SS
Mail Code: IBM 1204
Company: NASA Johnson Space Center

Daues, Kathy
Mail Code: FA3
Company: NASA Johnson Space Center

Daughtery, S.
Mail Code: OA/BOE
Company: NASA Johnson Space Center

Daves, Kathy
Mail Code: IE
Company: NASA Johnson Space Center

David, Leonard
Mail Code:
Company: Space World Magazine

Davis, Bonnie
Mail Code:
Company: Navy Experimental Diving Unit

Davis, Jerry
Mail Code:
Company: Lovelace Scientific Resources

Davis, Peter
Mail Code:
Company: Bell and Trotti

Davis, Jennifer
Mail Code: DP4
Company: NASA Johnson Space Center

Davis, Sara
Mail Code: M1-199
Company: Aerospace Corporation

Dawson, Ann
Mail Code:
Company: NSCA Queensland Division

Day, LeRoy
Mail Code:
Company: Leroy E. Day and Associates

De Pontbriand, Rene J.
Mail Code:
Company: US Army Research Laboratory

DeLeon, Pablo
Mail Code:
Company: Argentine Association For Space Technology

DeRooy, Carolyn R.
Mail Code:
Company: General Electric

DeVos, Francis J.
Mail Code: ER
Company: NASA Johnson Space Center

Dean, Bunny
Mail Code: AP2
Company: NASA Johnson Space Center

Deardorff, Don
Mail Code:
Company: General Dynamics

Delerich, Billie
Mail Code:
Company: General Motors Technical Center

Delgado, R. D.
Mail Code: OG-5
Company: NASA Johnson Space Center

Demel, Kenneth
Mail Code: SP34
Company: NASA Johnson Space Center

Demosthenes, Ted A.
Mail Code:
Company:

Deres, Joe
Mail Code:
Company: Southwest Research Institute

Desai, Arun
Mail Code: B22
Company: Lockheed

Deuser, Mark
Mail Code:
Company:

Devitt, Clint
Mail Code: X11P15
Company: Hercules, Inc.

Dews, Peter
Mail Code:
Company: Harvard Medical School

Dezio, Joe
Mail Code: 406.0
Company: NASA Goddard Space Flight Center

Dhangavelu, Madhu
Mail Code: RRB-101
Company: Institute of Aerospace Architecture

DiRaimo, Luigi
Mail Code:
Company: General Motors of Canada Limited

Diaz, Manny
Mail Code: C81
Company: Lockheed

Dick, David
Mail Code: I-2S1
Company: Link

Dickerson, Otho T.
Mail Code: ND25
Company: NASA Johnson Space Center

Dickson, Kathy
Mail Code:
Company: Science Communcations Studies

Dietz, R. H.
Mail Code: EV
Company: NASA Johnson Space Center

Dillard, Scott
Mail Code:
Company: ILC Space Systems

Dingee, Judy
Mail Code:
Company: Moller Manufacturing

Director,
Mail Code: CC-LHD
Company: U.S. Army Laboratory Command

Director,
Mail Code: SP
Company: U.S. Army Laboratory Command

Director,
Mail Code: AMSAA
Company: NASA Johnson Space Center

Director,
Mail Code: ARDEC
Company: U.S. Army Laboratory Command

Director,
Mail Code: AVSCOM
Company: U.S. Army

Director,
Mail Code: ML
Company: U.S. Army Laboratory Command

Director,
Mail Code: ER
Company: U.S. Army Laboratory Command

Director,
Mail Code: MICOM
Company: U.S. Army HEL Detachment

Director,
Mail Code: TACOM
Company: U.S. Army

Director,
Mail Code:
Company: Global Engineering Documents

Dischinger, Charles
Mail Code: EO23
Company: NASA Marshall Space Flight Center

Disher, John
Mail Code:
Company: Avanti Systems

Dixon, Jeff
Mail Code: T6H
Company: McDonnell Douglas Corporation

Dlhopolsky, Joe
Mail Code: T25-07
Company: Grumman Aerospace Corporation

Dobbins, Melva
Mail Code: C44
Company: Lockheed

Doeling, Tom
Mail Code: DF-42/RSO
Company: NASA Johnson Space Center

Doerr, Joan L.
Mail Code: 1204
Company: Westinghouse Electric Corporation

Dolgin, Don
Mail Code:
Company: Naval Bio-Dynamics Facility

Doll, Susan
Mail Code: JW-21
Company: Boeing Aerospace

Dominguez, Javier
Mail Code:
Company: DPTO. DE INGENIERIA MECANICA

Dotts, R. L.
Mail Code: HA
Company: NASA Johnson Space Center

Doty, Laura
Mail Code: 218-7
Company: NASA Ames Research Center

Douglas, Freddie
Mail Code: FA-30
Company: NASA Stennis Space Center

Douglas, William K.
Mail Code:
Company: Consultant

Douglas, Helen
Mail Code: 2151
Company: Naval Underwater Systems Center

Down, Robert
Mail Code:
Company:

Downey, Juan
Mail Code:
Company:

Doyle, Marge
Mail Code:
Company:

Dragg, James
Mail Code: C109
Company: Lockheed

Dreesbach, Don
Mail Code: AL/CFH/CER
Company: Cseriac

Drewry, Doug
Mail Code: OB
Company: NASA Johnson Space Center

Drysdale, Alan
Mail Code: F516
Company: McDonnell Douglas Corporation

Duarte, Deborah
Mail Code:
Company: Futron Corporation

Dubel, Joe
Mail Code: A3J02417-4
Company: McDonnell Douglas-HB

Duchein, Derek
Mail Code:
Company: Lockheed Aircraft Service Co.

Ducote, G. J.
Mail Code: OB
Company: NASA Johnson Space Center

Duerk, Donna
Mail Code:
Company: Cal Poly

Duggan, Margaret
Mail Code:
Company: Arthur D. Little Company

Duke, Michael B.
Mail Code: SA
Company: NASA Johnson Space Center

Duke, Henry
Mail Code: 7
Company: Martin Marietta Services

Dumain, Carol
Mail Code: 301-422
Company: Jet Propulsion Laboratory

Dunbar, Bonnie J.
Mail Code: CB
Company: NASA Johnson Space Center

Duncan, Jerry
Mail Code:
Company: Deere and Co.

Duncan, R. P. (Ray)
Mail Code:
Company: Lockheed Aeronautical Systems Company

Duncan, Ann
Mail Code:
Company: BioTechnology

Dundas, Jim
Mail Code:
Company: Hamilton Standard Div. UTC

Dungan, Marylan
Mail Code: F8M2A
Company: Loral Space Information Systems

Dunn, T. W.
Mail Code: MS-1
Company: NASA Johnson Space Center

Dunn, Bob
Mail Code: CA42
Company: NASA Johnson Space Center

Durrett, Robert H.
Mail Code: EL45
Company: NASA Marshall Space Flight Center

Dutta, Sourin P.
Mail Code:
Company: University of Windsor

Dutton, Helen
Mail Code: DO62
Company: NASA Johnson Space Center

Duvall, Laura
Mail Code: C44
Company: Lockheed

Dwyer, W. K.
Mail Code: EV13
Company: NASA Johnson Space Center

ESA,
Mail Code:
Company:

Eades, Frank
Mail Code: SP52
Company: Johnson Engineering Corporation

Early, T. W.
Mail Code: EV3
Company: NASA Johnson Space Center

Eberhard, E.
Mail Code: A3J02117-7
Company: McDonnell Douglas-HB

Eckelcamp, R. E.
Mail Code: ER2
Company: NASA Johnson Space Center

Eckenrode, Richard J.
Mail Code:
Company: U.S. Nuclear Regulatory Commission

Edeen, Mary Beth
Mail Code: EC-7
Company: NASA Johnson Space Center

Egusquiza, R. M.
Mail Code: M70/CSC
Company: NASA Johnson Space Center

Ehl, Kami
Mail Code:
Company: Rockwell Space Operations Company

Ehrlich, Nelson J.
Mail Code:
Company: NASA Aerospace Education Services Project

Eisenberg, Martin
Mail Code:
Company: University of Florida

Elder, Ruth
Mail Code: BV4
Company: NASA Johnson Space Center

Elias, Bart
Mail Code:
Company: Georgia Institute of Technology

Ellis, J. L.
Mail Code: SP
Company: NASA Johnson Space Center

Ellison, June
Mail Code: HQ/ULS
Company: NASA Headquarters

Elmer, Steve
Mail Code:
Company: Umpqua Research Co.

Elrod, Steve
Mail Code: AB37
Company: NASA Marshall Space Flight Center

Embach, Jim
Mail Code:
Company: Consultant

Englehart, John
Mail Code:
Company: General Electric

English, Jim
Mail Code: AE87
Company: Rockwell International

Epright, Charles
Mail Code: A23
Company: Lockheed

Erb, R.B.
Mail Code: KT
Company: Caset

Erickson, J. D.
Mail Code: ER11
Company: NASA Johnson Space Center

Ernest, Bill
Mail Code:
Company: Hamilton Standard Management Services

Eskridge, Gordon W.
Mail Code:
Company: NASA Aerospace Education Services Project

Ess, Kim
Mail Code: SP43
Company: NASA Johnson Space Center

Eubanks, Michael
Mail Code: ES2
Company: NASA Johnson Space Center

Ezenson, E. E.
Mail Code: ES63
Company: NASA Johnson Space Center

Fadden, Delmar M.
Mail Code: MS 7Y 91
Company: Boeing Commercial Airplane Co.

Fagler, Mary Alice
Mail Code: K.P.
Company: Eastman Kodak Company

Fahnstrom, Dale
Mail Code:
Company: IIT&ID

Fairchild, Kyle
Mail Code: HA
Company: NASA Johnson Space Center

Fallo,
Mail Code:
Company:

Falvo, Frank
Mail Code:
Company:

Farkas, Andy
Mail Code: EF2
Company: NASA Johnson Space Center

Farrell, Rich
Mail Code: 6X-KJ
Company: Boeing Aerospace

Farris, Ron
Mail Code: SP5
Company: NASA Johnson Space Center

Fauver, Marge
Mail Code: SE/STI
Company: NASA Johnson Space Center

Fecht, Barbara
Mail Code:
Company: Battelle Northwest

Fehin, Patrick
Mail Code:
Company: Digital Equipment International B.V.

Feng, Pi-Lien S.
Mail Code:
Company: PL and Associates

Ferguson, John
Mail Code: B80A
Company: Bendix Field Engineering

Fernandez, Kathy
Mail Code: Code: 423
Company: NRAD

Fettig, Jim
Mail Code: C09
Company: Lockheed

Finger, Herb
Mail Code: 219-1
Company: NASA Ames Research Center

Fisher, H.T.
Mail Code:
Company: Lockheed Missiles & Space Co.

Fisher, Tom
Mail Code:
Company: Lockheed Missiles & Space Co.

Fisher, Craig
Mail Code:
Company:

Fisher, V. G.
Mail Code: PS/MITRE
Company: NASA Johnson Space Center

Fitzgerald, James B.
Mail Code:
Company: NASA Aerospace Education Services Project

Fitzkee, Archie
Mail Code: 421.0
Company: NASA Goddard Space Flight Center

Fleming, Terrance
Mail Code: C81
Company: Lockheed

Flippen, Alexis
Mail Code: 218-7
Company: NASA Johnson Space Center

Flohr, Stuart
Mail Code:
Company: Lockheed

Flynn, Glenda
Mail Code: SE
Company: NASA Johnson Space Center

Flynt, David W.
Mail Code:
Company: WRDC/FIVR

Foley, Tico
Mail Code: DT67
Company: NASA Johnson Space Center

Foley, Dennis
Mail Code:
Company: Lockheed

Fong, Kenneth
Mail Code:
Company: Wright State University

Fongheiser, John
Mail Code:
Company:

Fontenot, Sonia
Mail Code: WMA-B1 225
Company: Webb, Murray and Associates

Fontenot, Sonita
Mail Code: WMA 225
Company: Webb, Murray and Associates

Ford, Marie
Mail Code:
Company: Dynamics Research Corporation

Ford, Don
Mail Code: ED52
Company: NASA Marshall Space Flight Center

Forsythe, Randy
Mail Code: EE24
Company: NASA Marshall Space Flight Center

Forsythe, D. L.
Mail Code: ND35
Company: NASA Johnson Space Center

Fort, Burke
Mail Code:
Company:

Fossum, Mike
Mail Code: D07
Company: NASA Johnson Space Center

Foster, Janet
Mail Code: 0906
Company: IBM

Foster, Maryland
Mail Code: EG/BAR
Company: NASA Johnson Space Center

Foy, Doris
Mail Code: ECI
Company: NASA Johnson Space Center

Franchi, S. B.
Mail Code:
Company: General Electric

Frassanito, John
Mail Code:
Company:

Freivalos, Andy
Mail Code:
Company: Pennsylvania State University

French, James
Mail Code:
Company: American Institute of Aeronautics and Astronau

Friend, Edwin Vic
Mail Code:
Company: Airline Pilots Association

Frost, Wade
Mail Code: EC5
Company: NASA Johnson Space Center

Fry, Clarence A.
Mail Code:
Company: CHI Systems, Inc.

Fry, Mary
Mail Code:
Company: American University

Fuchs, Karola
Mail Code:
Company: Software Engineering Institute

Fulgham, Do
Mail Code:
Company: Southwest Research Institute

Furr, Paul
Mail Code: HS-30
Company: Grumman Space Station, PSD

GSFC Library,
Mail Code: 252
Company: NASA Goddard Space Flight Center

Gallant, Bill
Mail Code: A23
Company: Lockheed

Gallo, Michael J.
Mail Code:
Company: Rupprecht Patashnich

Garcia, Rafael
Mail Code: SD4
Company: NASA Johnson Space Center

Gardner, Vickie
Mail Code: 213-15
Company: NASA Ames Research Center

Gardner, Vickie
Mail Code: 213-15
Company: NASA Johnson Space Center

Gardner-Bonneau, Daryle J.
Mail Code:
Company: CTA, Inc.

Gary,
Mail Code:
Company: Arthur D. Little Company

Garza T., Jesus S.
Mail Code:
Company: ITESM

Gates, Tom M.
Mail Code:
Company: NASA Aerospace Education Services Project

Geddie, James C.
Mail Code: TCATA
Company: U.S. Army Laboratory Command

Geer, Charles W.
Mail Code: 8H-25
Company: Boeing Aerospace

Geisel, W. A.
Mail Code: DT34
Company: NASA Johnson Space Center

Gerlach, Ron
Mail Code: EA65
Company: NASA Johnson Space Center

Gilad, Issachar
Mail Code:
Company: Technion-Israel Institute of Technology

Gilbert, Lawrence J.
Mail Code:
Company: NASA Aerospace Education Services Project

Gillespie, Mary
Mail Code: A3G44110-2
Company: McDonnell Douglas-HB

Gillies, C.L.
Mail Code:
Company: McDonnell Douglas Corporation

Gilmour, Bob
Mail Code: 231-15
Company: NASA Johnson Space Center

Gitelman, Joe
Mail Code: 505.0
Company: NASA Goddard Space Flight Center

Glanville, Roy
Mail Code: NA2/MA9
Company: NASA Johnson Space Center

Gleason, Stephen D.
Mail Code:
Company: Aerospace Medical Sciences, Inc.

Gleerup, Richard
Mail Code: D254
Company: Hughes Aircraft Company

Glovin, Debbie
Mail Code:
Company: KCET

Godfrey, Sandy
Mail Code:
Company: Rice University

Godwin, James
Mail Code: 213-15
Company: NASA Johnson Space Center

Gold, Leslie J.
Mail Code:
Company: NASA Aerospace Education Services Project

Goldberg, Joseph H.
Mail Code:
Company: Pennsylvania State College of Engineering

Golden, Connie
Mail Code:
Company: Loral Space and Range Systems

Goldsberry, Betty
Mail Code: C44
Company: Lockheed

Gonzales, Wayne
Mail Code:
Company: Lockheed

Gonzalez, Gail
Mail Code: GTS653
Company: NASA Kennedy Space Center

Gonzalez, S.
Mail Code: DJ
Company: NASA Johnson Space Center

Goodin, Ronnie
Mail Code: SOE-1
Company: NASA Kennedy Space Center

Goodman, Jerry
Mail Code: EA42
Company: NASA Johnson Space Center

Goodwin, Sharon
Mail Code:
Company: OHMS, Division of Workplace Health & Safety

Gouti, Tom
Mail Code: C75
Company: Lockheed

Graafmans, Jan A.M.
Mail Code:
Company: Eindhoven University of Technology

Grace, Tom
Mail Code: EA65
Company: NASA Johnson Space Center

Granahan, John
Mail Code: EC6
Company: Hamilton Standard Management Services

Granseuer, Peter
Mail Code: MTC
Company: European Space Agency

Grasse, Karen
Mail Code: 7-3
Company: NASA Lewis Research Center

Graves, Claude E.
Mail Code: EA6
Company: NASA Johnson Space Center

Gray, Robert J.
Mail Code:
Company: ILC Dover

Green, J.A.
Mail Code: FB-81
Company: Rockwell International

Green, Paul
Mail Code:
Company: University of Michigan

Greenberg, Barry
Mail Code: F6F4S
Company: Calspan

Greenisen, Michael C.
Mail Code: SD5
Company: NASA Johnson Space Center

Greenstein, Joel
Mail Code:
Company: Clemson University

Greenwood, Fred
Mail Code:
Company:

Gregg, Larry
Mail Code:
Company: Webb, Murray and Associates

Gremillion, Wayne
Mail Code: ND4
Company: NASA Johnson Space Center

Grick-Agrella, Shelly
Mail Code: HF60
Company: Boeing Aerospace

Griffin, T. R.
Mail Code: Grumman/B1
Company: NASA Johnson Space Center

Griggs, Charlotte
Mail Code: 17-4B56
Company: McDonnell Douglas Corporation

Griggs, Carla
Mail Code: 17-4B-56
Company: McDonnell Douglas Corporation

Grimm, Ann
Mail Code:
Company: University of Michigan

Griner, Carolyn
Mail Code: JA01
Company: NASA Marshall Space Flight Center

Grissom, Fred
Mail Code: B08
Company: Lockheed

Grissom, L. W.
Mail Code: EV12
Company: NASA Johnson Space Center

Groo, Bob
Mail Code: ZC-20
Company: Rockwell International

Groskreutz, Alan
Mail Code: R21M
Company: Rockwell Space Operations Company

Gross, Richard
Mail Code:
Company: Aircraft Accident Investigation

Gross, Pamela
Mail Code: A105
Company: Global Engineering Documents

Grossberg, Mitch
Mail Code: ATR-304
Company: Federal Aviation Administration

Grounds, Phyllis
Mail Code: SP44
Company: NASA Johnson Space Center

Grounds, Dennis
Mail Code: SE 57
Company: NASA Johnson Space Center

Grunsfeld, John
Mail Code: CB
Company: NASA Johnson Space Center

Grzeskowiak, Cecelia
Mail Code: 185(ILL)
Company: NASA Langley Research Center

Guerra, Raul
Mail Code: A3J05121-2
Company: McDonnell Douglas-HB

Guiard, Michel
Mail Code:
Company: Embassy of France

Guignard, John
Mail Code:
Company: Guignard Biodynamics Associates

Gunnett, James
Mail Code: MDC T322
Company: McDonnell Douglas Corporation

Guthrie, Greg
Mail Code:
Company: SRS Technology

Haag, Gary
Mail Code:
Company:

Hackler, I. M.
Mail Code: ET13
Company: NASA Johnson Space Center

Haddad, Albert
Mail Code:
Company: Lockheed MSC, R&DD

Hagford, Carolyn
Mail Code:
Company: Rosemont, Inc.

Haines, Richard F.
Mail Code: 269-4
Company: NASA Ames Research Center

Hale, Joseph
Mail Code: EO23
Company: NASA Marshall Space Flight Center

Hall, J.B.
Mail Code: 364
Company: NASA Langley Research Center

Hall, Stephen
Mail Code: EO23
Company: NASA Marshall Space Flight Center

Hall, Patty
Mail Code: A16
Company: Lockheed

Hall, Trey
Mail Code: C75
Company: Lockheed

Hall, Jennie
Mail Code:
Company: Lockheed

Hamilton, George S.
Mail Code: EO23
Company: NASA Marshall Space Flight Center

Hammersley, Vern C.
Mail Code: EM
Company: NASA Johnson Space Center

Hanes, Kevin
Mail Code: EH6
Company: NASA Johnson Space Center

Hanley, Jeff
Mail Code: D0641
Company: NASA Johnson Space Center

Hanley, Robert
Mail Code: CA3
Company: NASA Johnson Space Center

Hannemann, Ernest
Mail Code:
Company: Utility Power Corporation

Hanson, Kim
Mail Code:
Company: Tech-Time

Harbury, Al
Mail Code: 244-19
Company: NASA Johnson Space Center

Harding, Kimberly
Mail Code:
Company:

Hardy, Alva
Mail Code: SN3
Company: NASA Johnson Space Center

Harm, Deborah
Mail Code: SD5
Company: NASA Johnson Space Center

Harper, Steven
Mail Code:
Company: AL/CFH/CSERIAC

Harrington, Tom
Mail Code:
Company: University of Nevada

Harris, Randy
Mail Code: 152E
Company: NASA Langley Research Center

Harris, Bob
Mail Code: SP
Company: Johnson Engineering Corporation

Harris, M. D.
Mail Code: EV3
Company: NASA Johnson Space Center

Harris, Bernard
Mail Code: CB
Company: NASA Johnson Space Center

Harris, Nina
Mail Code:
Company: Environmental Research Institute of Michigan

Harris, Philip R.
Mail Code:
Company: Netrologic

Harris, Bob
Mail Code: C44
Company: NASA Johnson Space Center

Harrison, C. Felicity
Mail Code:
Company: Pardyne Research and Development Corp.

Harrison, Chuck
Mail Code: MMS
Company:

Hart, Sandra
Mail Code: 262-3
Company: NASA Ames Research Center

Haskell, Ian D.
Mail Code:
Company: University of Illinois

Haven, Cindy
Mail Code: SE3
Company: NASA Johnson Space Center

Hawkins, James S.
Mail Code: JC-61
Company: Boeing Aerospace

Hayes, Benita
Mail Code: LA20
Company: NASA Marshall Space Flight Center

Hazel, F. J.
Mail Code:
Company: General Electric

Heard, Walter L.
Mail Code: MS190
Company: NASA Langley Research Center

Heath, Gloria W.
Mail Code:
Company: SAR-ASSIST

Heath, D. W.
Mail Code: ER2
Company: NASA Johnson Space Center

Heath, David
Mail Code: EC
Company: NASA Johnson Space Center

Hebenstreit, Wolf
Mail Code: 4C-69
Company: Boeing Aerospace

Heckart, Steve A.
Mail Code: HED
Company: U.S. Air Force

Heffernan, Mary Ann
Mail Code:
Company: Physiotherapy Industria

Heilig, Leesa
Mail Code: DG-53
Company: NASA Johnson Space Center

Hein, Jeff
Mail Code: ER3
Company: NASA Johnson Space Center

Helfert, Mike
Mail Code: SN4
Company: NASA Johnson Space Center

Helm, Barb
Mail Code: 2761200
Company: McDonnell Douglas Aerospace

Henderson, J. B.
Mail Code: EP42
Company: NASA Johnson Space Center

Hendrick, Hal
Mail Code:
Company: University of Southern California

Henison, Ken
Mail Code: 1553
Company: General Dynamics

Henninger, Don
Mail Code: EC3
Company: NASA Johnson Space Center

Herbella, Gary
Mail Code: 22-8740
Company: General Dynamics Space Systems Division

Hermling, Richard
Mail Code: MH
Company: NASA Johnson Space Center

Hernandez, Jorge
Mail Code: HEI
Company: Hernandez Engineering

Hernandez, Karen
Mail Code: CB
Company: NASA Johnson Space Center

Herring, Christine R.
Mail Code: 1-331
Company: Lockheed Aircraft Services Co.

Herron, Robin
Mail Code:
Company: Colorado State University

Herzer, Harry B.
Mail Code:
Company: NASA Aerospace Education Services Project

Hewitt, Glen
Mail Code: FAA AXD-4
Company:

Heyn, Karen
Mail Code:
Company: Whirlpool Corporation

Heywood, John
Mail Code:
Company: Department of Veterans Affairs

Higgins, Gary
Mail Code: EL82
Company: NASA Marshall Space Flight Center

Hill, Susan D.
Mail Code: C09
Company: Lockheed

Hill, Earl E.
Mail Code: T
Company: MITRE Corporation Headquarters

Hill, William
Mail Code:
Company: Vitro Corporation

Hill, Leland
Mail Code: F6F57
Company: Loral Space Information Systems

Hines, Mike
Mail Code: 244-19
Company: NASA Johnson Space Center

Hines, Kim
Mail Code: M/S 213-15
Company:

Hinman, Elaine
Mail Code: EB62
Company: NASA Marshall Space Flight Center

History Office,
Mail Code: JM12
Company: NASA Johnson Space Center

Hoch, Jr., R. G.
Mail Code:
Company: Allied Pilots Assoc.

Hodge, Philip
Mail Code: MZB
Company: NASA Headquarters

Hoffman, Mark A.
Mail Code:
Company: U.S. Army Laboratory Command

Hoffman, Stephen J.
Mail Code:
Company: Science Application International Corporation

Hoffman, K. R.
Mail Code: MDCS2024
Company: McDonnell Douglas Corporation

Hoffman, Ronald B.
Mail Code:
Company: MITRE Corporation

Hoffman-Pinther, Peter
Mail Code:
Company: University of Houston

Hogan, J.
Mail Code: COR-TEZ
Company: NASA Lewis Research Center

Holden, Tina
Mail Code: C81
Company: Lockheed

Holland, Al
Mail Code: SD-5
Company: NASA Johnson Space Center

Holley, L.
Mail Code: CG-GSD-2
Company: NASA Kennedy Space Center

Holloway, Chalmer V.
Mail Code: 612
Company: NASA Johnson Space Center

Holmes, Gladys
Mail Code:
Company: University of Florida

Holmes, Wilma
Mail Code: EC/GHG
Company: NASA Johnson Space Center

Holt, J. D.
Mail Code: MA3
Company: NASA Johnson Space Center

Holt, James
Mail Code: C75
Company: Lockheed

Homick, Ph.D., Jerry L.
Mail Code: SD
Company: NASA Johnson Space Center

Hoodless, Ralph
Mail Code: PD01
Company: NASA Marshall Space Flight Center

Hook, R.W.
Mail Code: 288
Company: NASA Langley Research Center

Hord, Ed
Mail Code:
Company: Johnson Engineering Corporation

Horn, Joe
Mail Code: N18B5
Company: Ontario Hydro

Horn, Joe
Mail Code: 2723
Company: IAI MALAT

Horrigan, Ken
Mail Code:
Company: NSCA Queensland Division

Horsman, Paul
Mail Code: SP33
Company: NASA Johnson Space Center

Hosler, William W.
Mail Code: OB
Company: NASA Johnson Space Center

Howard, Anita
Mail Code: EB24
Company: NASA Marshall Space Flight Center

Howard, Glen
Mail Code:
Company:

Howard, Mindy
Mail Code:
Company: Bachmanstraat 56B

Howell, Joe
Mail Code: PR41
Company: NASA Marshall Space Flight Center

Hoyt, Reed
Mail Code:
Company: USARIEM Altitude and Medical Division

Hsu, Grace
Mail Code:
Company: Freeway American Sino Trading Company

Hu, Svlvia
Mail Code: PS336
Company: NASA Johnson Space Center

Hubbard, Robert P.
Mail Code:
Company: Michigan State University

Hudgins, Charlotte
Mail Code: SP4
Company: NASA Johnson Space Center

Hudson, Wayne
Mail Code: C
Company: NASA Headquarters

Hughes, Lawrence M.
Mail Code: D330
Company: Hughes Aircraft Company

Hughes, Kim
Mail Code: 22D2
Company: McDonnell Douglas-HB

Hughes, Frank
Mail Code: DT
Company: NASA Johnson Space Center

Humayun, Sarwat
Mail Code:
Company: NRCC

Humes, John
Mail Code:
Company: Rockwell International

Humphries, Randy
Mail Code: ED62
Company: NASA Marshall Space Flight Center

Hungerford, John C.
Mail Code:
Company: University of Tennessee

Hunt, Liza
Mail Code:
Company: Global Engineering Documents

Hunter, J.
Mail Code: 86-10
Company: NASA Lewis Research Center

Hunter, Thomas A.
Mail Code:
Company:

Huntley, D.
Mail Code: JR-26
Company: Boeing Aerospace

Huntley, M. Stephen
Mail Code: DTS 45
Company: Department of Transportation

Hutchins, Nancy
Mail Code: PS33
Company: NASA Johnson Space Center

Huttenbach, R. C.
Mail Code:
Company: Nelson Space Services Limited

Hwang, Erica
Mail Code: C81
Company: Lockheed Martin

Hwoschinsky, Peter V.
Mail Code: ARD-30
Company: Federal Aviation Administration

Hyde, G. E.
Mail Code: FA/BP
Company: NASA Johnson Space Center

Iannetti, F.
Mail Code:
Company: North Carolina State University

Info File, SS Trng
Mail Code: DT2
Company: NASA Johnson Space Center

Info Files, SSR MOD
Mail Code: DE32
Company: NASA Johnson Space Center

Iwagoshi, Atsushi
Mail Code:
Company: Lockheed Missiles & Space Co.

Jaax, J. R.
Mail Code: EC11
Company: NASA Johnson Space Center

Jackson, John
Mail Code: SP2
Company: NASA Johnson Space Center

Jackson, Bruce
Mail Code:
Company: Bruce G. Jackson & Associates

Jackson, J. B.
Mail Code: MSO-4
Company: NASA Space Station Program Office

Jackson, Mary
Mail Code: SD
Company: NASA Johnson Space Center

Jacobus, Heidi
Mail Code:
Company: Cybernet Systems Corp.

Jacobus, Charles
Mail Code:
Company: Cybernet Systems Corporation

James, John
Mail Code: SD4
Company: NASA Johnson Space Center

Janousek, Jim
Mail Code:
Company: ESL

Jaremko, Annette
Mail Code:
Company: Veterans Administration Medical Center

Jaster, Mark
Mail Code: 442.0
Company: NASA Goddard Space Flight Center

Jenkins, James
Mail Code: RR
Company: NASA Headquarters

Jenner, Jeff
Mail Code: 240-A3
Company: NASA Ames Research Center

Jennings, Richard
Mail Code: SD2
Company: NASA Johnson Space Center

Jensen, Kermit
Mail Code:
Company: PRC Kentron

Jensen, Warren
Mail Code:
Company: Wright State University

Jensen, Warren
Mail Code:
Company:

Jeris, Ed
Mail Code: AOS
Company: NASA Lewis Research Center

Jewel, Wayne
Mail Code:
Company: Systems Technology, Inc.

Jodoin, L.
Mail Code:
Company: Dechief Information & Documentation Centre

Johanson, William
Mail Code: MS 244-19
Company: NASA Ames Research Center

Johnson, Dale
Mail Code: JSC/SP
Company: Johnson Engineering Corporation

Johnson, Gary A.
Mail Code: A3G21T43
Company: McDonnell Douglas-HB

Johnson, Malcolm L.
Mail Code: SP3
Company: NASA Johnson Space Center

Johnson, Jerry
Mail Code: SSU-3
Company: NASA Headquarters

Johnson, James W.
Mail Code: NRC/CSA
Company: Canadian Space Agency

Johnson, D. H.
Mail Code: MDC604
Company: McDonnell Douglas Corporation

Johnson, J. D.
Mail Code:
Company: Astro Aerospace Corp.

Johnson, Gaylen
Mail Code:
Company: Wright State University

Johnson, Carol
Mail Code: SP74
Company: LTV Aerospace and Defense Company

Johnson, Dirk
Mail Code: ER6
Company: NASA Johnson Space Center

Johnson, Carol
Mail Code: SP-74
Company: Loral-Vaught Systems

Johnson, Steve
Mail Code: SD4
Company: KRUG Life Sciences

Johnston, Richard
Mail Code:
Company: Richard Johnston & Associates, Inc.

Johnston, Karen
Mail Code:
Company:

Jones, William R.
Mail Code: OB
Company: NASA Johnson Space Center

Jones, J. J.
Mail Code: EE2
Company: NASA Johnson Space Center

Jones, J. Colin
Mail Code: FTB
Company: European Space Agency

Jones, Todd
Mail Code: PMA 205-42
Company: Naval Air Systems Command

Jones, Scott
Mail Code: T-6-G
Company: McDonnell Douglas Corporation

Jones, B. Sherwood
Mail Code:
Company: YARD Limited

Jones, Rod
Mail Code: OB
Company: NASA Johnson Space Center

Jones, Howard
Mail Code: JR-18
Company: Boeing Aerospace

Jones, Frank
Mail Code: DSS-2
Company: NASA Space Station Freedom Program Office

Jones, William
Mail Code: OB
Company: NASA Johnson Space Center

Joyce, Joseph P.
Mail Code: 333-1
Company: NASA Lewis Research Center

Joyce, Geoffrey A.
Mail Code: FPC 301
Company: British Aerospace Public Limited Co.

Joyce, Lillie
Mail Code: 60-3 Rm120
Company: NASA Lewis Research Center

Julian, Ron
Mail Code: AL/CFBA
Company: U.S. Air Force Wright-Patterson AFB

Jungers, N. J. (Nick)
Mail Code: MSD/84-42
Company: LMSC/CA

Justice, John
Mail Code:
Company: FMC Corporation

Kahn, Mike
Mail Code: CEC
Company: Ball Aerospace

Kain, Robert
Mail Code: MC
Company: NASA Johnson Space Center

Kamm, Brian H.
Mail Code: 36-72
Company: Douglas Aircraft

Kan, Edwin
Mail Code: 264-805
Company: Jet Propulsion Laboratory

Kapell, M. H.
Mail Code: EV13
Company: NASA Johnson Space Center

Keller, Andrew D.
Mail Code:
Company: Human Factors Engineer

Kelly, Sean
Mail Code: DT48
Company: NASA Johnson Space Center

Kelly, Richard T.
Mail Code:
Company: Pacific Science & Engineering Group Inc.

Ken, Voska
Mail Code:
Company: Lockheed Missiles & Space Co.

Kendall, Kate
Mail Code:
Company: Global Engineering Documents

Kennedy, Kriss J.
Mail Code: ED-22
Company: NASA Johnson Space Center

Kenney, G.P.
Mail Code: TC2
Company: NASA Johnson Space Center

Kenney, Patrick
Mail Code: MDCB2PG
Company: McDonnell Douglas Corporation

Kent, Elijah
Mail Code: 429
Company: NASA Langley Research Center

Kent, J.
Mail Code: PT4
Company: NASA Johnson Space Center

Kenton, Odis W.
Mail Code:
Company: Virto Corporation

Kenyon, E. J.
Mail Code: PA21
Company: NASA Johnson Space Center

Kerk, Carter J.
Mail Code:
Company: Texas A & M University

Kerm, Beth
Mail Code: NI-25
Company: University Of Washington

Kerns, Karol
Mail Code: MS W376
Company: MITRE Corporation

Kerwin, Joseph P.
Mail Code: A04
Company: Lockheed

Kessler, Joan
Mail Code: D5
Company: Fairchild Space and Defense

Khanna, S.
Mail Code: F631H
Company: Loral Space Information Systems

Khorsandi, Mehrzad
Mail Code:
Company: Texas A & M University

Kiely, Tim
Mail Code: AD75
Company: Rockwell International

Killingsworth, W. W.
Mail Code: 0B
Company: NASA Johnson Space Center

Kim, Youngjoun
Mail Code:
Company:

Kimm, Vicky
Mail Code:
Company: National Standards Association

Kinder, Jim
Mail Code: PNA 20541B
Company: Department of the Navy

King, David M.
Mail Code:
Company: King Business Systems

King-Icenogle, D. M.
Mail Code: MDSSC-F658
Company: NASA Kennedy Space Center

Kirby, Ryborn (Rip)
Mail Code: MT3
Company: NASA Johnson Space Center

Kirby, Ray
Mail Code:
Company: Old Dominion University

Kirk, A. L.
Mail Code: EV5
Company: NASA Johnson Space Center

Kisco, Ken
Mail Code: AC59
Company: Rockwell International Space Systems Division

Kissinger, Dave
Mail Code: KB3
Company: NASA Johnson Space Center

Kitmacher, Gary H.
Mail Code: SM4
Company: NASA Johnson Space Center

Kleeman, Walt
Mail Code:
Company:

Klein, Bill
Mail Code:
Company: Florida Power and Light

Kline, Alan
Mail Code: 13-6-1
Company: Government Communilation Systems Division

Knight, N.L.
Mail Code:
Company: General Physics

Knudson, Lyle
Mail Code:
Company: University Of Denver

Koch, Linda
Mail Code: DL-DSD-24
Company: NASA Kennedy Space Center

Kodzis, Tony
Mail Code:
Company: Tufts University

Kohl, F.
Mail Code: 500-115
Company: NASA Lewis Research Center

Konradi, Andrei
Mail Code: SN3
Company: NASA Johnson Space Center

Konz, Stephan
Mail Code:
Company: Kansas State University

Koppa, Rodger
Mail Code:
Company: Texas A & M University

Korbakes, Vonda
Mail Code:
Company: General Electric

Kosmo, Joseph J.
Mail Code: EC5
Company: NASA Johnson Space Center

Kraft, Conrad
Mail Code:
Company:

Kraiss, Frederic
Mail Code:
Company: FGAN/FAT

Kramer, Cathy
Mail Code: SE
Company: NASA Johnson Space Center

Krebs, Christopher
Mail Code:
Company: Payload Systems, Inc.

Kreider, George
Mail Code: 244-19
Company: NASA Ames Research Center

Kreifeldt, John
Mail Code:
Company: Tufts University

Krishen, Vijay
Mail Code: EG
Company: NASA Johnson Space Center

Kroemer, K.H.E.
Mail Code:
Company: Virginia Polytechnical Institute

Krohn, Gregory
Mail Code:
Company: Lockheed Aeronautical Systems Company

Krolak, Pat
Mail Code:
Company: University of Lowell

Kross, Denny
Mail Code: E11/SSEIO
Company: NASA Marshall Space Flight Center

Kruger, Gerald
Mail Code:
Company: U.S. Army Research Institute of Env. Medicine

Kruger, Carl
Mail Code: 213-15
Company: NASA Ames Research Center

Kruger, Carl
Mail Code: M/S 213-15
Company:

Kruk, Ronald V.
Mail Code:
Company: CAE Electronics Ltd.

Kruse, Kenneth
Mail Code: SP3
Company: Johnson Engineering Corporation

Kukla, Jim
Mail Code: C70
Company: Lockheed

Kulpa, Vygantas P.
Mail Code: CR20
Company: NASA Marshall Space Flight Center

Kulwicki, P.U.
Mail Code:
Company: U.S. Army

Kumar, K. Vasantha
Mail Code: SD5/KI
Company: KRUG Life Sciences

Kumar, Shrawan
Mail Code:
Company: University of Alberta

Kuminecz, Jerry
Mail Code: EM2
Company: NASA Johnson Space Center

Kupla, Vega
Mail Code: CS01
Company: NASA Marshall Space Flight Center

LaPinta, Charles K.
Mail Code: SD25
Company: NASA Johnson Space Center

LaVigna, Tom
Mail Code: 490.0
Company: NASA Goddard Space Flight Center

Laine, Rudolph L.
Mail Code: DAPE-MRP
Company: HQDA ODCSPER

Lam, Clement
Mail Code:
Company: North Harris County College, South Campus

Lam, S.
Mail Code:
Company:

Lamar, David
Mail Code: XE
Company: NASA Lunar & Mars Exploration Program Office

Lamb, Joe Laine
Mail Code:
Company: Air Force Flight Test Center

Lammers, D.
Mail Code: KN/ESA
Company: European Space Agency

Lancaster, E. Mason
Mail Code: EG
Company: NASA Johnson Space Center

Lance, Nick
Mail Code: EA65
Company: NASA Johnson Space Center

Land, B.
Mail Code: CN22D
Company: NASA Marshall Space Flight Center

Landoux, Paul
Mail Code: T7A
Company: NASA Johnson Space Center

Lane, Helen
Mail Code: SD4
Company: NASA Johnson Space Center

Lang, Greg A.
Mail Code:
Company: McDonnell Douglas-HB

Langdoc, William A.
Mail Code: SP5
Company: NASA Johnson Space Center

Langley, Linda
Mail Code:
Company: Tech-U-Fit Corporation

Lansing, James B.
Mail Code: ASSI
Company: NASA Kennedy Space Center

Larsen, Bruce
Mail Code: DE-FLS
Company: NASA Kennedy Space Center

Larson, Skip
Mail Code: TA
Company: NASA Johnson Space Center

Lauffer, John
Mail Code:
Company: Rocketdyne Corp.

Laux, Lila
Mail Code:
Company: Rice University

Laux, Nan
Mail Code:
Company: ILC Space Systems

Laveson, Jack
Mail Code:
Company: Integrated Systems Research

Lawrence, J. T.
Mail Code: EA43
Company: NASA Johnson Space Center

Lawson, M. B.
Mail Code: EC6
Company: NASA Johnson Space Center

Lazaroff, Scott
Mail Code: EP-5
Company: NASA Johnson Space Center

Le, Michael
Mail Code: EP5
Company: NASA Johnson Space Center

LeBlanc, Stanford
Mail Code: 0E
Company: NASA Johnson Space Center

LeDonne, Fred
Mail Code: ZC-01
Company: Rockwell Space Operations Company

Lee, Louise
Mail Code: LIBRARY-5
Company: NASA Kennedy Space Center

Lee, Mary
Mail Code: 36-84
Company: McDonnell Douglas Corporation

Lee, R.
Mail Code: TRW
Company: NASA Johnson Space Center

Lee, Kevin
Mail Code: SE
Company: General Electric

Lee, Dan
Mail Code: 240A-3
Company: NASA Johnson Space Center

Leger, Lubert
Mail Code: EM
Company: NASA Johnson Space Center

Lehnkuhler, Larry
Mail Code:
Company: ARAC

Lehrer, Beverly
Mail Code: JOB-1
Company: NASA Headquarters Library

Lehtonen, Timo
Mail Code:
Company: Datex Instrumentatiom Corp.

Leitzel, Lindsey
Mail Code:
Company: Harrison Radiator Division, GMC

Lengel, Robert C.
Mail Code: 1-7
Company: Tracor Applied Science

Levesque, Ray
Mail Code: A95J853174
Company: McDonnell Douglas Corporation

Leveton, Lauren
Mail Code: T-6-6
Company: Science Application International Corporation

Lew, L.W.
Mail Code: SP53
Company: NASA Johnson Space Center

Lewin, Ian
Mail Code:
Company: Lighting Science, Inc.

Lewis, Charles M.
Mail Code: E021
Company: NASA Marshall Space Flight Center

Lewis, James L.
Mail Code: SP
Company: NASA Johnson Space Center

Lewis, D. W.
Mail Code: D032
Company: NASA Johnson Space Center

Lewis, Ruth Ann
Mail Code: GSFC/442
Company: NASA Goddard Space Flight Center

Lewis, Jr., James L.
Mail Code: SP
Company: NASA Johnson Space Center

Li, Xin Xu
Mail Code:
Company: Freeway American Sino Trading, Inc.

Li, Zhang
Mail Code:
Company:

Librarian,
Mail Code: 239-13
Company: NASA Ames Research Center

Library, U.T.
Mail Code:
Company: U.T. Design Library

Library, HEL
Mail Code:
Company: U.S. Army

Library, Space Station
Mail Code: CA3
Company: NASA Johnson Space Center

Library, SSGSD
Mail Code: DJ12
Company: NASA Johnson Space Center

Library, A&RD
Mail Code: ER12
Company: NASA Johnson Space Center

Library, SED
Mail Code: ET
Company: NASA Johnson Space Center

Library, Technical
Mail Code: PS3
Company: NASA Johnson Space Center

Library, SSEDF
Mail Code: LMSC/A-22
Company: NASA Johnson Space Center

Library, HMF
Mail Code: SD2
Company: NASA Johnson Space Center

Library, Life Sciences
Mail Code: SE
Company: NASA Johnson Space Center

Library, TCD
Mail Code: EE/MRI
Company: NASA Johnson Space Center

Library, FDSD
Mail Code: EK
Company: NASA Johnson Space Center

Library, S S
Mail Code: KL
Company: NASA Johnson Space Center

Library,
Mail Code:
Company: Rockwell International

Library, MOD SS
Mail Code: DA14
Company: NASA Johnson Space Center

Library, LeRC
Mail Code: 60-3
Company: NASA Lewis Research Center

Library, Judy Joba -
Mail Code:
Company: Canadian Space Agency

Library, Technical
Mail Code: T40
Company: Allied Signal Aerospace

Library, Technical
Mail Code: PS33
Company: NASA Johnson Space Center

Library, Technical
Mail Code:
Company: Boeing Defense & Space Group

Likens, William
Mail Code: 239-4
Company: NASA Ames Research Center

Lilly, Annette
Mail Code: 60-1
Company: NASA Lewis Research Center

Lineberry, Edgar C.
Mail Code: IZ-4
Company: NASA Johnson Space Center

Linsley, Jerald
Mail Code:
Company: Florida Institute of Technology

Lippert, Buddy
Mail Code: C25
Company: Lockheed

Liput, J. J.
Mail Code: EK11
Company: NASA Johnson Space Center

Livingston, John M.
Mail Code: CT-22
Company: NASA Marshall Space Flight Center

Lloyd, J.
Mail Code: MS-8
Company: NASA Space Station Program Office

Lloyd, C.
Mail Code: SE
Company: NASA Johnson Space Center

Lo, John
Mail Code: EP5
Company: Lockheed

Lockwood, M.
Mail Code:
Company: ERA Technology

Loftus, Joseph P.
Mail Code: SA
Company: NASA Johnson Space Center

Logan, James S.
Mail Code: SD12
Company: NASA Johnson Space Center

Logan, Cory
Mail Code: SP-52
Company: NASA Johnson Space Center

Loman, Marty
Mail Code: T6I
Company: McDonnell Douglas Corporation

Lomax, Piper
Mail Code: T20-G-2
Company: NASA Ames Research Center

Loo, David
Mail Code: AD60
Company: Rockwell International

Lopresti, Sam
Mail Code:
Company: Blackwell North America Inc.

Lounge, John M.
Mail Code: CB
Company: NASA Johnson Space Center

Love, Alton K.
Mail Code: ND335
Company: NASA Johnson Space Center

Low, G. David
Mail Code: GA22
Company: NASA Johnson Space Center

Lowerison, John C.
Mail Code:
Company: NASA Aerospace Education Services Project

Lowrey, Gerry
Mail Code: MDC-2 6211
Company: McDonnell Douglas Corporation

Lozano, Anselmo
Mail Code: EA42
Company: NASA Johnson Space Center

Lozar, Charles C.
Mail Code:
Company: Architects Equaties

Luckstead, John
Mail Code: PS 33
Company: NASA Johnson Space Center

Luczkowski, Gay
Mail Code: NA
Company: NASA Johnson Space Center

Luczkowski, Stanley M.
Mail Code: NS2
Company: NASA Johnson Space Center

Lufkin, Ann
Mail Code: ET22
Company: NASA Johnson Space Center

Lund, Jim
Mail Code: R11-1337
Company: TRW

Luse, M. B.
Mail Code: EE
Company: NASA Johnson Space Center

Luttges, Marvin
Mail Code:
Company: University of Colorado at Boulder

Lynch, Lettie
Mail Code: EC1
Company: CTSD Library

MOD Library,
Mail Code: DG46
Company: NASA Johnson Space Center

MSFC Doc. Rpos.,
Mail Code: CN22D
Company: NASA Marshall Space Flight Center

MSFC Library,
Mail Code: CN-24L
Company: NASA Marshall Space Flight Center

Mac Donald, Edward
Mail Code:
Company: CAE Electronics Ltd.

MacDonald, Kathy
Mail Code:
Company: Tufts University

Mackey, Christy
Mail Code:
Company: Honeywell

Maclise, Dougal
Mail Code: 213-2
Company: NASA Ames Research Center

Mah, Frank
Mail Code: AE-11
Company: Rockwell International

Mahla, Gary
Mail Code: 5W-5825
Company: Harris Corporation

Majors, Cindy
Mail Code: DA2
Company: NASA Johnson Space Center

Mallary, W. E.
Mail Code: EK53
Company: NASA Johnson Space Center

Mallory, Ken
Mail Code:
Company: Performance Mastery Company

Malone, Ray C
Mail Code: SP33
Company: NASA Johnson Space Center

Maloy, Joe
Mail Code: 65
Company: NASA Johnson Space Center

Malpass, Al
Mail Code:
Company: Space Industries Inc.

Management, OSC Data
Mail Code: O56A-130
Company: NASA Johnson Space Center

Mancuso, T. G.
Mail Code: ZA
Company: NASA Johnson Space Center

Mann, Harriette
Mail Code:
Company: McDonnell Douglas Corporation

Manteuffel, J.
Mail Code: JR-10
Company: Boeing Aerospace

Marette, D.
Mail Code:
Company: Aerospatiale, Incorporated

Marr, Phil
Mail Code: C18
Company: Lockheed

Marriott, Rich
Mail Code: 313
Company: NASA Goddard Space Flight Center

Marshall, Paul
Mail Code: BC
Company: NASA Headquarters

Marshall, Louis B.
Mail Code:
Company: NASA Aerospace Education Services Project

Marshall, Andrew
Mail Code:
Company: Marshall Associates

Martin, John
Mail Code:
Company: Lockheed Missiles & Space Co.

Martin, Joyce
Mail Code: CN22
Company: NASA Marshall Space Flight Center

Martinez, Oscar
Mail Code:
Company: U.S. Air Force

Martinez, P. A.
Mail Code: EV12
Company: NASA Johnson Space Center

Marton, Ed
Mail Code:
Company: Dynamics Research Corporation

Martwick, Fred
Mail Code: 213-4
Company: NASA Ames Research Center

Maryniak, Gregg
Mail Code:
Company: Space Studies Institute

Mason, John A.
Mail Code:
Company: Arthur D. Little Company

Masterson, Hugh
Mail Code:
Company: Display Tech, Inc.

Masubuchi, Koichi
Mail Code:
Company: Massachusetts Institute of Technology

Mathes, Karen
Mail Code: SD-24
Company: NASA Johnson Space Center

Matsumoto, Shinji
Mail Code:
Company: SEAVANS SOUTH

Matterson, Joan
Mail Code: DTIC-DMA
Company: Defense Technical Information Center

Mattheaus, Julie
Mail Code: ML
Company: NASA Johnson Space Center

Matthew, Bill
Mail Code:
Company: U.S. Army RIEM

May, Rich
Mail Code: SP33
Company: NASA Johnson Space Center

Mayfield, James A.
Mail Code:
Company: GE Government Services

McAllister, Donna
Mail Code: PS3
Company: KRUG Life Sciences International

McAllister, Fred A.
Mail Code: SP
Company: NASA Johnson Space Center

McBarron, James W.
Mail Code: EC
Company: NASA Johnson Space Center

McCandless, Bruce
Mail Code: CB
Company: NASA Johnson Space Center

McCarthy, Kristen
Mail Code: AD38
Company: Rockwell International

McCaul, Ray
Mail Code:
Company: University of Colorado Boulder

McCauley, Nan
Mail Code:
Company: Monterey Technologies

McCauley, Lisa A.
Mail Code:
Company: Battelle Laboratories

McClean, Marty
Mail Code: EP5
Company: NASA Johnson Space Center

McCline, Carole
Mail Code: MD
Company: NASA Kennedy Space Center

McColl, Ray
Mail Code:
Company: University of Colorado at Boulder

McConville, John T.
Mail Code:
Company: Anthropology Research Project, Inc.

McCullough, John
Mail Code: D064
Company: NASA Johnson Space Center

McDaniel, Joe
Mail Code: AL/CFHW
Company: U.S. Air Force Wright-Patterson AFB

McDonald, Sue
Mail Code:
Company: NASA Science & Technology Info. Center

McDonald, David
Mail Code:
Company: Tufts University

McDonald, Shawn
Mail Code: 213-15
Company: NASA Johnson Space Center

McDonnell, Rob
Mail Code:
Company: Johnson Engineering Corporation

McEwen, W.W.
Mail Code: F194
Company: McDonnell Douglas Corporation

McFeron, L. O. (Lou)
Mail Code:
Company: Lockheed Aeronautical Systems Co.

McGuffey, Douglas
Mail Code:
Company: Swales and Associates

McHenry, E. N.
Mail Code: EA6
Company: NASA Johnson Space Center

McKay, Tim
Mail Code: C81
Company: Lockheed

McKee, Sandra
Mail Code: T-6-I
Company: McDonnell Douglas Corporation

McKee, Charlene
Mail Code: EV/MRI
Company: NASA Johnson Space Center

McLean, Ged
Mail Code:
Company: Department of Mechnical Engineering

McLeroy, J.C.
Mail Code: ZR
Company: NASA Johnson Space Center

McManigell, R. H. (Dick)
Mail Code:
Company: LADC

McMillion, James
Mail Code: PA01
Company: NASA Marshall Space Flight Center

McMurtray, James W.
Mail Code:
Company: NASA Aerospace Education Services Project

McRuer, Duane
Mail Code:
Company: Systems Technology, Inc.

McSweeney, Josephine
Mail Code:
Company: Pratt Institute Library

McTamaney, Lou
Mail Code:
Company: FMC Corporation Technical Center

McVicker, J. P.
Mail Code: AOV 300
Company: Federal Aviation Administration

Mehta, Nishad
Mail Code: F853N
Company: Loral/Calspan

Menard, Stacy
Mail Code: NS-4
Company: NASA Johnson Space Center

Menchaca, A. A.
Mail Code: ER2
Company: NASA Johnson Space Center

Merchant, Howard C.
Mail Code:
Company: Merenco Inc.

Merhav, Ilana
Mail Code:
Company: University of Haifa

Merriken, Michael
Mail Code:
Company: Honeywell

Merriman, Steve C.
Mail Code: 1066157
Company: McDonnell Douglas Aerospace

Mertz, David
Mail Code: AE46
Company: Rockwell International

Meshkati, Najmedin
Mail Code:
Company: USC-Institute of Safety & Systems Managment

Messinger, Mark
Mail Code: A23
Company: Lockheed

Metcalf, Therese
Mail Code:
Company: MITRE Corporation

Metcalf, Janet
Mail Code: SP33
Company: NASA Johnson Space Center

Meyers, Stew
Mail Code: 741
Company: NASA Goddard Space Flight Center

Mezzacappa, Elizabeth
Mail Code:
Company: SUNY Stony Brook Department of Psychology

Michaels, Kurt
Mail Code:
Company:

Milam, Linda
Mail Code:
Company: EG&G Idaho

Milburn, Ian
Mail Code:
Company: Telecom Australia

Milgram, Paul
Mail Code:
Company: University of Toronto

Millen, K.
Mail Code: MS-288
Company: NASA Langley Research Center

Miller, B.
Mail Code: 142-2
Company: NASA Lewis Research Center

Miller, Douglas
Mail Code:
Company: U.S. Air Force Headquarters

Miller, Jerry
Mail Code: DF42/RSO
Company: Rockwell Space Operations Company

Miller, Keith
Mail Code: 33-HH
Company: Boeing Commercial Airplane Co.

Miller, Ron
Mail Code: 705
Company: NASA Goddard Space Flight Center

Miller, Richard
Mail Code:
Company: Virginia Polytechnical Institute

Miller, Gerry
Mail Code:
Company:

Miller, Chris
Mail Code: 262-1
Company: NASA Ames Research Center

Miller, K. M.
Mail Code: SP52
Company: NASA Johnson Space Center

Miller, Barbara
Mail Code:
Company: Global Engineering Documents

Mills, T. C.
Mail Code: SE/MMA
Company: NASA Johnson Space Center

Minchew, Marsha
Mail Code:
Company:

Ming, Douglas W.
Mail Code: SN-2
Company: NASA Johnson Space Center

Minicky, Michael S.
Mail Code:
Company: U.S. Army Laboratory Command

Mitchell, Ray
Mail Code: JSC/SP52
Company: Johnson Engineering Corporation

Mitchell, Doyce
Mail Code: E063
Company: NASA Marshall Space Flight Center

Mitchell, Dawn
Mail Code:
Company: Cryovac

Mixon, Randolph W.
Mail Code: 152D
Company: NASA Langley Research Center

Mobley, Dave
Mail Code: DA01
Company: NASA Marshall Space Flight Center

Moe, Karen
Mail Code: 522
Company: NASA Goddard Space Flight Center

Moffitt, H. A.
Mail Code: D064
Company: NASA Johnson Space Center

Mogford, Richard
Mail Code:
Company: CTA, Inc.

Molesworth, Cecilia
Mail Code: 240-3
Company: NASA Johnson Space Center

Molgard, Don
Mail Code: MDC-1 6404
Company: McDonnell Douglas Corporation

Moll, Stephen W.
Mail Code: 641 A
Company: Naval Weapons Center

Monchak, A.
Mail Code: 0F
Company: NASA Johnson Space Center

Moncrief, James D.
Mail Code: SE2
Company: NASA Johnson Space Center

Mond, Carla
Mail Code:
Company: ADL Company, Inc.

Mongan, Philip T.
Mail Code: SM4
Company: NASA Johnson Space Center

Monson, Conrad
Mail Code: SX45
Company: Rockwell International

Montague, R. A.
Mail Code: ND4
Company: NASA Johnson Space Center

Montemayor, Maria
Mail Code: DS 31
Company: NASA Johnson Space Center

Monterio, Katie
Mail Code: A23
Company: Lockheed

Montigny, Marian
Mail Code:
Company: Stanford Telecommunications

Moon, C.
Mail Code: ADF
Company: NASA Lewis Research Center

Moon, Bill
Mail Code: MT3
Company: NASA Johnson Space Center

Moore, C.W.
Mail Code: B24
Company: Lockheed

Moore, Rhonda
Mail Code: EV12
Company: NASA Johnson Space Center

Moore, Nathan
Mail Code: SP33
Company: NASA Johnson Space Center

Moore, Philip
Mail Code:
Company: ATC

Moore, Arlene
Mail Code: 430
Company: NASA Langley Research Center

Moore, Gary
Mail Code:
Company: University of Wisconsin

Moore, Jerry
Mail Code:
Company: University of Wisconsin

Moore, Gil
Mail Code:
Company: Headquarters USAFA/DFA

Moran, Pat
Mail Code: 5670
Company: Aerospace Corporation

Morello, A. Samuel
Mail Code: 156A
Company: NASA Langley Research Center

Morgan, Tom
Mail Code:
Company: U.S. Air Force

Morgan, Barbara
Mail Code:
Company: NASA Aerospace Education Services Project

Morgan, G.
Mail Code: SP3/JEC
Company: NASA Johnson Space Center

Morris, Don B.
Mail Code: AE06
Company: Rockwell International

Morris, Charlie
Mail Code: EB32
Company: NASA Marshall Space Flight Center

Morrison, Dennis
Mail Code: SD4
Company: NASA Johnson Space Center

Mossman, Daryl
Mail Code:
Company: ILC Technology Inc.

Moths, Janis
Mail Code:
Company: University of Wisconsin-Milwaukee

Motil, Sue
Mail Code: 500-115
Company: NASA Lewis Research Center

Moule, I.A.
Mail Code:
Company: Raunds

Moullid, Mohamed
Mail Code: NS-522
Company: NASA Johnson Space Center

Mount, Frances
Mail Code: SP34
Company: NASA Johnson Space Center

Mowatt, Marilyn
Mail Code:
Company: Washington State University

Moyer, Michael J.
Mail Code: HSR-30
Company: Fairbanks Highway Research Center

Mueller, Karl L.
Mail Code:
Company: German Aerospace Establishment

Muise, Arlene
Mail Code:
Company: Systems Technology, Inc.

Muller, Mark V.
Mail Code:
Company: Southwest Research Institute

Mullins, Jeff
Mail Code: E023
Company: NASA Marshall Space Flight Center

Munies, Martha
Mail Code: SD
Company: NASA Johnson Space Center

Munoz, Nancy
Mail Code: EP4
Company: NASA Johnson Space Center

Muratore, Debra A.
Mail Code: CA3
Company: NASA Johnson Space Center

Muratore, John F.
Mail Code: DJ
Company: NASA Johnson Space Center

Murphy, Elizabeth
Mail Code:
Company: Computer Technology Associates

Murphy, George
Mail Code: 17-4
Company: McDonnell Douglas Corporation

Murphy, D.
Mail Code: MT3
Company: NASA Johnson Space Center

Myamoto, Akira
Mail Code:
Company: NASDA

Myers, Jay D.
Mail Code:
Company: SAE

Myers, Larry
Mail Code: WC
Company: NASA Johnson Space Center

Myers, Dean
Mail Code: SD2
Company: NASA Johnson Space Center

Myhre, Loran
Mail Code: SAM/UNC
Company: U.S. Air Force

Mykityshyn, Mark
Mail Code:
Company: MIT

Nace, Kevin
Mail Code:
Company: Naval Air Engineering Center

Nachtwey, D. Stuart
Mail Code: SD12
Company: NASA Johnson Space Center

Naderi, Melinda H.
Mail Code: E022
Company: NASA Marshall Space Flight Center

Nagel, Stephen R.
Mail Code: CB
Company: NASA Johnson Space Center

Nagy, Kornel
Mail Code: ES5
Company: NASA Johnson Space Center

Nakata, Steve
Mail Code:
Company: Space Industries Inc.

Nataupsky, Mark
Mail Code: 152-E
Company: NASA Langley Research Center

Nations, Jim
Mail Code:
Company: NASA Aerospace Education Services Project

Navarro, Bob
Mail Code: 218-7
Company: NASA Johnson Space Center

Neal, Terry
Mail Code: DF4
Company: NASA Johnson Space Center

Neal, Valerie
Mail Code:
Company: ESSEX Corporation

Nealis, Gary
Mail Code: DJ
Company: NASA Johnson Space Center

Nelson, Eric
Mail Code:
Company: U.S. Air Force Headquarters

Nerault, M.
Mail Code:
Company: Centre Spatial de Toulouse

Nesthus, Thomas E.
Mail Code:
Company: Federal Aviation Administration

Nevill, G.E.
Mail Code:
Company: University of Florida

Newbill, Lynn
Mail Code: DB 12
Company: NASA Headquarters

Newton, Steve
Mail Code: JA41
Company: NASA Marshall Space Flight Center

Ngo, Ken
Mail Code: C70
Company: Lockheed

Nguyen, Viet
Mail Code: DT67/RSO
Company: NASA Johnson Space Center

Nichols, Bob
Mail Code:
Company: STV Magazine

Nicholson, L.S.
Mail Code: EA
Company: NASA Johnson Space Center

Nicholson, Todd
Mail Code: JA26
Company: Boeing Aerospace

Nicodemus, Clarence L.
Mail Code: C75
Company: Lockheed

Nicols, Carol
Mail Code:
Company: Hose Engineering

Nilsson, Tomy
Mail Code:
Company: University of Prince Edward Island

Nixon, David
Mail Code:
Company: Southern California Institute of Architecture

Noble, Jacqueline A.
Mail Code: T6G
Company: McDonnell Douglas Corporation

Normand, Eugene
Mail Code: 2T-50
Company: Boeing Aerospace

North, Regina
Mail Code: SD5
Company: USRA

North, Debra
Mail Code:
Company:

Notaro, Joe
Mail Code: 6022
Company: Naval Air Development

Notestine, Hadyn E.
Mail Code:
Company: Ford Motor Company

Novara, Mauro
Mail Code:
Company: European Space Agency

Nuckols, Len
Mail Code: 11-0
Company: U.S. Navy

O'Brian, Erica
Mail Code:
Company: Paradigm

O'Connor, Brian
Mail Code: GA
Company: NASA Johnson Space Center

O'Donoghue, Timothy K.
Mail Code: T-6-6
Company: Science Application International Corporation

O'Handley, Doug
Mail Code: 245.1
Company: NASA Ames Research Center

O'Hearn, Brian
Mail Code:
Company: GEO-CENTERS, Inc.

O'Kane, Jim
Mail Code: EC5
Company: NASA Johnson Space Center

O'Neil, Harold F.
Mail Code:
Company: Advance Design Information

O'Neil, Graham
Mail Code: C106
Company: Lockheed

OSD Document Con,
Mail Code: B33B-555
Company: RSOC/Bendix

Oberright, John
Mail Code: 402
Company: NASA Goddard Space Flight Center

Office, Field
Mail Code: USAFACTR
Company: U.S. Army Human Engineering Laboratory

Office, Field
Mail Code: USAIC
Company: U.S. Army Human Engineering Laboratory

Office, Field
Mail Code: ADEA
Company: U.S. Army Human Engineering Laboratory

Office, Field
Mail Code: OMMCS
Company: U.S. Army Human Engineering Lab.

Office, Field
Mail Code: PM TRADE
Company: U.S. Army Human Engineering Laboratory

Ogburn, Ivan
Mail Code: C33
Company: Lockheed

Okushi, Jun
Mail Code:
Company: Space Project Group

Oleson, Mel
Mail Code: 7E-ER
Company: Boeing Aerospace

Olsen, Kolleen
Mail Code:
Company: Onan Corporation

Olsm, Richard
Mail Code: 8H-25
Company: Boeing Aerospace

Olson, Pam
Mail Code: AP5
Company: Space Center Houston

Oman, Charles
Mail Code:
Company: Acting Director, MVL

Onizuka, Lorna
Mail Code: Japan
Company: Natn'l Aeronautics & Space Development Admin.,

Ontiveros, Melanie
Mail Code: BF62
Company: NASA Marshall Space Flight Center

Ornelas, Tony
Mail Code: SM3
Company: NASA Johnson Space Center

Ortiz, James
Mail Code: DT3
Company: NASA Johnson Space Center

Ostrom, Lee
Mail Code: 2405
Company: EF&G, Idaho

Otoshi, Jason
Mail Code: T041-2
Company: General Electric

Ouellette, Michael
Mail Code:
Company: National Research Council Canada

Overmyer, Scott
Mail Code:
Company:

Owen, R. W.
Mail Code: DA3
Company: NASA Johnson Space Center

PMO SS Library,
Mail Code: EE4
Company: NASA Johnson Space Center

Palladini, R.
Mail Code: R21D
Company: Rockwell Space Operations Company

Palmer, Everett
Mail Code: 262-4
Company: NASA Ames Research Center

Palmer, Bob
Mail Code: TC-3
Company: NASA Johnson Space Center

Pappas, Dan
Mail Code: 202-3
Company: NASA Ames Research Center

Paque, J.
Mail Code: MSC
Company: European Space Agency

Paquette, Steve
Mail Code: STRNC-YBF
Company: U.S. Army

Parker, Nelson
Mail Code: EL41
Company: NASA Marshall Space Flight Center

Parker, Robert
Mail Code: CB
Company: NASA Johnson Space Center

Parker, Michael
Mail Code: DT47
Company: NASA Johnson Space Center

Parker, Minot H.
Mail Code:
Company: NASA Aerospace Education Services Project

Parker, Gordon
Mail Code: MSX
Company: NASA Space Station Program Office

Parmet, Alan J.
Mail Code: SAM/EDK
Company: U.S. Air Force

Parmet, Norman R.
Mail Code:
Company:

Parra, C. G.
Mail Code: PR
Company: NASA Johnson Space Center

Parrish, Joe
Mail Code:
Company: Ocean Systems Engineering

Parsons, Stuart
Mail Code:
Company: Lockheed Missiles & Space Co.

Parsons, Carmen
Mail Code: SP2
Company: NASA Johnson Space Center

Parsons, Stuart O.
Mail Code:
Company: Parsons and Associates

Patlach, Bob
Mail Code: TC2
Company: NASA Johnson Space Center

Patrican, Richard
Mail Code: 8
Company: NASA Space Station Program Office

Patton, Jeff
Mail Code:
Company: General Dynamics

Pausback, Nick
Mail Code:
Company: SYD Mead, Inc.

Payne, L. H.
Mail Code: DJ34
Company: NASA Johnson Space Center

Pearson, Richard G.
Mail Code:
Company: North Carolina State University

Peck, David
Mail Code:
Company:

Peebles, Bob
Mail Code: TC2
Company: NASA Johnson Space Center

Peeler, Elizabeth
Mail Code: 1207-3M
Company: Allied Signal Aerospace Company

Pellosie, John C.
Mail Code:
Company: U.S. Air Force AAMRL/HEG

Pennington, Jack
Mail Code: 152D
Company: NASA Langley Research Center

Peppered, Lynn
Mail Code: TC-12
Company: NASA Johnson Space Center

Peppersack, Margaret
Mail Code: MMA
Company: Martin Marietta - Manned Space Systems

Percipalle, Piergiorgio
Mail Code:
Company:

Perera, S.T.
Mail Code:
Company: Commercial Space Technologies

Perino, M.A.
Mail Code:
Company: Alenia Spazio S.p.A.

Perkins, Richard
Mail Code:
Company: Honeywell

Perner, Chris D.
Mail Code: SP
Company: NASA Johnson Space Center

Perotta, Ray
Mail Code: A23
Company: Lockheed

Perranova, Michele
Mail Code:
Company: Oak Ridge National Laboratory

Perrett, Linda
Mail Code:
Company: Ebasco Services, Inc.

Perry, R. (Bob)
Mail Code: LAS-0/1343
Company: Lockheed Aircraft Service Co.

Perschbacher, Peggy
Mail Code: MN65-2000
Company: Honeywell

Peters, Joseph I.
Mail Code: T-6-6
Company: Science Application International Corporation

Peterson, James R. (Bob)
Mail Code:
Company: Honeywell

Peterson, Don
Mail Code:
Company: AOC, Inc.

Peterson, Larry
Mail Code:
Company: U.S. Army Laboratory Command

Peterson, Wayne
Mail Code: EA63
Company: NASA Johnson Space Center

Peterson, D. D.
Mail Code: EA44
Company: NASA Johnson Space Center

Peterson, M. L.
Mail Code: NS23
Company: NASA Johnson Space Center

Peterson, Leif
Mail Code: SD23/KS
Company: NASA Johnson Space Center

Petri, Dave
Mail Code: EG
Company: NASA Johnson Space Center

Petty, Brian
Mail Code:
Company: Johnson Engineering Corporation

Pfoutz, Ray
Mail Code:
Company: Lockheed Missiles & Space Co.

Pham, Jacqueline
Mail Code:
Company: Herman Miller Inc.

Phillips, Robert W.
Mail Code:
Company:

Phillips, J. C.
Mail Code: NB53
Company: NASA Johnson Space Center

Pierre, Lizanna
Mail Code: SD4/BL37
Company: NASA Johnson Space Center

Pierson, Duane
Mail Code: SD4
Company: NASA Johnson Space Center

Pinckney, Ronald
Mail Code:
Company: Cairos Company

Pinkas, G.
Mail Code: ADF
Company: NASA Lewis Research Center

Platoff, Anne
Mail Code: AP4/HEI
Company: NASA Johnson Space Center

Plaza, Angel
Mail Code: SE-3
Company: NASA Johnson Space Center

Podrigus, Hector
Mail Code: SP3
Company: NASA Johnson Space Center

Poehlmann, Karin
Mail Code: bldg 225
Company: Webb, Murray and Associates

Poff, Norman O.
Mail Code:
Company: NASA Aerospace Education Services Project

Pogue, William R.
Mail Code:
Company: CAMUS, Inc.

Polette, Thomas M.
Mail Code: B18
Company: Lockheed

Pollack, Martin
Mail Code: DO4-40
Company: Grumman Aerospace Corporation

Pollard, Susie
Mail Code: C75
Company: Lockheed

Pond, Dan
Mail Code:
Company: Florida Institute of Technology

Pool, Sam L.
Mail Code: SD
Company: NASA Johnson Space Center

Poston, Alan
Mail Code:
Company: U.S. Army Human Engineering Laboratory

Potzel, Gerda
Mail Code:
Company: Ontario Hydro Library

Powell, Charles Lee
Mail Code:
Company: Stanford University

Poydar, Henry
Mail Code:
Company: Axyz, Inc.

Prescott, Stephanie
Mail Code: EP2/SCD
Company: NASA Johnson Space Center

Prevas, Chris
Mail Code:
Company: General Electric

Price, Charles R.
Mail Code: ER2
Company: NASA Johnson Space Center

Price, Lonnie
Mail Code: DJ41
Company: NASA Johnson Space Center

Pridgen, Paul
Mail Code: M.Z. 2480
Company: General Dynamics

Prince, R. N.
Mail Code: EC
Company: NASA Johnson Space Center

Pringle, Scott
Mail Code:
Company: Kaman Aerospace

Proctor, David
Mail Code: JJ
Company: NASA Johnson Space Center

Prucha, Stephen
Mail Code:
Company: University of Houston

Quine, Dick
Mail Code: DW-223
Company: University of Denver

Racheli, Ugo
Mail Code:
Company: University of Colorado at Boulder

Radley, Charles
Mail Code:
Company: Astro Aerospace Corp.

Radziwon, John J.
Mail Code: RT-SAF-1
Company: NASA Kennedy Space Center

Ragan, James H.
Mail Code: SP43
Company: NASA Johnson Space Center

Rahn, Debbi
Mail Code: IR
Company: NASA Headquarters

Rains, Ed
Mail Code: DE42
Company: NASA Johnson Space Center

Raleigh, Janice
Mail Code:
Company: Life Systems

Ramos, Fernando
Mail Code: MDC-2 5156
Company: McDonnell Douglas Corporation

Rankin, J. G.
Mail Code: EC21
Company: NASA Johnson Space Center

Rathjen, Thomas
Mail Code: SP4
Company: NASA Johnson Space Center

Ray, C.
Mail Code: CP
Company: NASA Headquarters

Ray, A. M. Lex
Mail Code:
Company: Martin Marietta Civil Space and Communications

Reaves, John H.
Mail Code: EJ44
Company: NASA Marshall Space Flight Center

Redding, T. E.
Mail Code: 0B
Company: NASA Johnson Space Center

Reen, Ellen
Mail Code:
Company: Bell Aerospace Textron

Reeves, J.
Mail Code: SD5
Company: NASA Johnson Space Center

Reeves, Jackie
Mail Code: PL/P2
Company: KRUG Life Sciences

Regal, David
Mail Code: 96-06
Company: Boeing Commercial Airplane Co.

Reid, Don
Mail Code: 3X-PE
Company: Boeing Aerospace

Reimers, Harold
Mail Code: SP43
Company: NASA Johnson Space Center

Reising, John M.
Mail Code: WRDC/KTC
Company: Aerospace Group at HFS

Reismann, Barbara
Mail Code: 20-336
Company: Arthur D. Little Company

Remington, Roger
Mail Code: 262-2
Company: NASA Ames Research Center

Remp, Kerry L.
Mail Code: 501-4
Company: NASA Lewis Research Center

Remp, Kerry
Mail Code: 501-4
Company: NASA Lewis Research Center

Rendell-Baker, Leslie
Mail Code:
Company: Loma Linda University

Resnick, Mark
Mail Code:
Company: Florida International University

Reumont, Reese
Mail Code: ET33
Company: NASA Johnson Space Center

Reynolds, Mike A.
Mail Code: 4S/HS-30
Company: NASA Johnson Space Center

Reynolds, Herbert M.
Mail Code:
Company: Michigan State University

Reysa, Dick
Mail Code: HS-30
Company: Boeing Aerospace

Rezner, Clare
Mail Code: A3JO7217-6
Company: McDonnell Douglas Corporation

Rhodes, Wayne
Mail Code:
Company: Rhodes and Associates, Inc.

Ricco, Gary E.
Mail Code:
Company: U.S. Air Force AAMRL/HEF

Rice, Robert R.
Mail Code: EA43
Company: NASA Johnson Space Center

Richard, Brian
Mail Code: CF
Company: McDonnell Douglass Aerospace Company

Richards, B. L.
Mail Code:
Company: Webb, Murray and Associates

Richardson, O.
Mail Code: MDSSC/14-1
Company: DCASPRO

Richichi, J. F.
Mail Code: Grumman/B1
Company: NASA Johnson Space Center

Richman, Ed
Mail Code: C81
Company: Lockheed

Riggle, Darren
Mail Code: C44
Company: Lockheed Martin

Riley, Victor
Mail Code: MN65-2500
Company: Honeywell

Rinehart, Mitzi M.
Mail Code:
Company: Allied Signal Aerospace Company

Rios, Sylvester
Mail Code: 1E
Company: CA Link Corp

Ripley, Grady
Mail Code: FP/P2
Company: KRUG Life Sciences

Ritter, Ransom S.
Mail Code:
Company: NASA Aerospace Education Services Project

Ritterhouse, C. L.
Mail Code: EE4
Company: NASA Johnson Space Center

Robbins, H. C. (Robbie)
Mail Code: B90
Company: Lockheed

Robbins, Malcolm
Mail Code:
Company:

Roberts, Floyd E.
Mail Code: EH34
Company: NASA Marshall Space Flight Center

Robertson, Ken
Mail Code:
Company: ESSEX Corporation

Robertson, William O.
Mail Code:
Company: NASA Aerospace Education Services Project

Robinson, Judith
Mail Code: SL
Company: NASA Johnson Space Center

Robinson, J.
Mail Code: KA01CM
Company: NASA Marshall Space Flight Center

Rocha, Carlos J.
Mail Code:
Company: Telesis Design Science International, Inc.

Rodriguez, Daphne
Mail Code: 505.0
Company: NASA Goddard Space Flight Center

Rodriguez, M.
Mail Code: EA43
Company: NASA Johnson Space Center

Rodriguez, H. I.
Mail Code: KM31
Company: NASA Johnson Space Center

Rodriquez, Pedro
Mail Code: ED54
Company: NASA Marshall Space Flight Center

Rodriquez, Richard
Mail Code: 0B
Company: NASA Marshall Space Flight Center

Roebuck, John A.
Mail Code:
Company: Roebuck

Roesch, J. Richard
Mail Code: 2410
Company: Naval Coastal Systems Center

Rogers, Tom
Mail Code:
Company: Texas A & M University

Rogers, Stephen
Mail Code:
Company: Anacapa Sciences, Inc.

Rosa, Kathy
Mail Code:
Company: Space Industries Inc.

Roscoe, Alan H.
Mail Code:
Company: Britannia Airways Ltd

Rose, David A.
Mail Code: 6022
Company: U.S. Naval Air Development Center

Rose, Judy
Mail Code:
Company: Marubeni America Corp.

Rosette, K.
Mail Code: 750.5
Company: NASA Goddard Space Flight Center

Roth, Axel
Mail Code: PA01
Company: NASA Marshall Space Flight Center

Rowe, Ray
Mail Code:
Company: CTA, Inc.

Rowson, David
Mail Code:
Company: PSC International

Ruder, Albert
Mail Code: ND313
Company: Loral Space Information Systems

Rudisill, Marianne
Mail Code: SP33
Company: NASA Johnson Space Center

Ruiz, M. A.
Mail Code: EG4
Company: NASA Johnson Space Center

Rummel, John
Mail Code: SL
Company: NASA Johnson Space Center

Rupani, Murli
Mail Code: C44
Company: Lockheed

Rupe, Linda
Mail Code: F8M2A
Company: Loral Space Information Systems

Rush, J. D.
Mail Code: NB53
Company: NASA Johnson Space Center

Rusimijeamdekwwe, Jeanluc
Mail Code:
Company: University of Houston

Russel, Joe
Mail Code: NCA-1-6210
Company: Lockheed Sanders

Russo, Dane
Mail Code: SD
Company: NASA Johnson Space Center

Rust, Donna
Mail Code:
Company: ILC - Dover

Rutherford, Joe F.
Mail Code:
Company: KMS Fusion, Inc.

Ryan, Suzanne
Mail Code: DTS-930
Company: U.S. Department of Transportation

Sadao, Sugiyama
Mail Code:
Company: Kwansei Gakuin University

Sadeh, Willy
Mail Code:
Company: Colorado State University

Sadler, Jack
Mail Code: 7E-HJ
Company: Boeing Aerospace

Saenz, Ericia
Mail Code:
Company:

Sahiar, Farhad
Mail Code:
Company: Wright State University

Sakamoto, Louise
Mail Code: T40
Company: Air Research L.A. Division

Salafia, Ronald
Mail Code:
Company: Fairfield University

Saleh, Samira
Mail Code: U2M28
Company: Parmax

Salnitski, V.
Mail Code:
Company: Institute for Biomedical Problems

Samen, Robert
Mail Code: B12
Company: Lockheed

Samonski, Frank H.
Mail Code: EC2/SIM
Company: NASA Johnson Space Center

Sampaio, Carlos
Mail Code: C81
Company: Lockheed

Sampaio, Carlos
Mail Code: C81
Company: NASA Johnson Space Center

Samuelson, John
Mail Code: A23
Company: Lockheed

Sanchez, Robert
Mail Code:
Company: Global Ergonomic Technologies, Inc.

Sanders, Fred
Mail Code: EJ23
Company: NASA Marshall Space Flight Center

Sanford, J.
Mail Code:
Company: University of Texas Health Science Center

Sang, A. C.
Mail Code: DE43
Company: NASA Johnson Space Center

Sangal, Sayta P.
Mail Code:
Company: Wright State University

Sanger, E.L.
Mail Code:
Company: McDonnell Douglas Corporation

Sanger, George
Mail Code: B25
Company: Lockheed

Sanland, Kimberly
Mail Code: E063
Company: NASA Marshall Space Flight Center

Santos, Beatrice
Mail Code: SE3
Company: NASA Johnson Space Center

Sauer, Richard L.
Mail Code: SD4
Company: NASA Johnson Space Center

Sauer, Kevin
Mail Code:
Company: Building Research Council

Sauerwein, Tim
Mail Code: 733.5
Company: NASA Goddard Space Flight Center

Saunders, P. E.
Mail Code: EE6
Company: NASA Johnson Space Center

Sawaya, George
Mail Code: EV12
Company: SD/ALI

Sayer, James
Mail Code:
Company: Univ. of MI. Transportation Research Institute

Scarborough, George
Mail Code: 3064244
Company: McDonnell Douglas Missile Systems Company

Schafer, Bernd
Mail Code:
Company: German Aerospace Research Est.

Schaffner, Grant
Mail Code:
Company: Payload Systems, Inc.

Schiemann, J. D.
Mail Code: MSC
Company: European Space Agency

Schiffler, Richard
Mail Code:
Company: U.S. Air Force

Schiflett, Sam G.
Mail Code: VN
Company: U.S. Air Force School of Aerospace Medicine

Schiller, Craig
Mail Code: C56B
Company: Rockwell International

Schlegel, Robert
Mail Code:
Company: School of Industrial Eng., Univ. of Oklahoma

Schlosser, James
Mail Code: A96J183513
Company: McDonnell Douglas-HB

Schlosser, Jim
Mail Code: MDC-2 5170
Company: McDonnell Douglas Corporation

Schmidt, Ruthann
Mail Code:
Company: Carnegie-Mellon University

Schmitt, Karen
Mail Code:
Company: BTI Consultant

Schmitt, Robert Lee
Mail Code: R351
Company: National Security Agency

Schneider, Lawrence C.
Mail Code:
Company: SAE

Schneider, W. C.
Mail Code: EA
Company: NASA Johnson Space Center

Scholle, Kim
Mail Code:
Company:

Schopper, Ron
Mail Code:
Company: AL/CFH/CSERIAC

Schornick, James L.
Mail Code: 0B/ETS
Company: NASA Johnson Space Center

Schroeder, Lothar
Mail Code:
Company: Axiom Technology Corp.

Schultz, Larry L
Mail Code: DF-PMO
Company: NASA Kennedy Space Center

Schultz, John
Mail Code: BL37/SD4
Company: NASA Johnson Space Center

Schulze, Lawrence J.H.
Mail Code:
Company: Texas A & M University

Schur, Anne
Mail Code:
Company: RCA Aerospace Defense

Seaman, Calvin
Mail Code: MG
Company: NASA Johnson Space Center

Sedej, Melaine
Mail Code:
Company: Hydrogen Consultants, Inc.

Sedej, Dan
Mail Code: DE33
Company: NASA Johnson Space Center

See, M. J.
Mail Code: DA6/0G
Company: NASA Johnson Space Center

Seitz, William W.
Mail Code: SL
Company: NASA Johnson Space Center

Selle, Don
Mail Code:
Company: Ocean Systems Engineering

Seminara, Joseph L.
Mail Code:
Company: Human Factors Consultant

Serig, Dennis I.
Mail Code:
Company: U.S. Nuclear Regulatory Commission

Setzer, Kristen
Mail Code: FC88
Company: Rockwell International

Sexton, Jeffrey
Mail Code: EO23
Company: NASA Marshall Space Flight Center

Seyl, J. W.
Mail Code: DA3
Company: NASA Johnson Space Center

Shaffner, Richard
Mail Code:
Company: ILC Technology

Shafto, Michael
Mail Code: ARC/262-1
Company: NASA Ames Research Center

Shaker, F.
Mail Code: 500-203
Company: NASA Lewis Research Center

Shamblee, Lee
Mail Code: DJ41
Company: NASA Johnson Space Center

Shanguan, Chen
Mail Code:
Company: Institute of Space Medico-Engineering

Sharpe, Tim
Mail Code: C71
Company: Lockheed

Shaughnessy, R. W.
Mail Code: 0C
Company: NASA Johnson Space Center

Shayler, David J.
Mail Code:
Company: Astro Info Services

Sheegog, Bill R.
Mail Code: SP4
Company: NASA Johnson Space Center

Shehad, Nagy
Mail Code: MITRE/FS
Company: MITRE Corporation

Shepherd, William
Mail Code: CB
Company: NASA Johnson Space Center

Shepherd, William T.
Mail Code: AAM-550
Company: Federal Aviation Administration

Sheppard, R. R.
Mail Code: ND216
Company: NASA Johnson Space Center

Sherwin, Herb
Mail Code:
Company: General Electric

Shimamoto, Suzie
Mail Code: BL/P2
Company: KRUG Life Sciences

Shinar, David
Mail Code:
Company: Ben Gurion University of the Negev

Shinkle, Gerald L.
Mail Code: D032
Company: NASA Johnson Space Center

Shinkman, Alan
Mail Code: C44
Company: Lockheed

Shostack, Steve
Mail Code: B15/C44
Company: Lockheed Martin

Silverman, Gerald
Mail Code:
Company: U.S. Army

Silverman, Howard
Mail Code: A23
Company: Lockheed

Simanonok, Karl
Mail Code: SD5
Company: NASA Johnson Space Center

Simard, Sylvian
Mail Code:
Company: MPB Technologies Inc.

Simmons, John
Mail Code:
Company:

Simmons, Scott
Mail Code: MO/P2
Company: KRUG Life Sciences

Simonds, Chuck
Mail Code: A24
Company: Lockheed Martin (FA)

Simpson, Carol A.
Mail Code:
Company: Psycho-Linguistic Research Associates

Singer, Michael J.
Mail Code:
Company: U.S. Army

Skoog, Ingmar
Mail Code:
Company: Dornier GMBH

Slavin, Tom
Mail Code: 84-15
Company: Boeing Defense and Space Group

Slavin, Tom
Mail Code: 84-15
Company: Boeing Defense & Space Group

Sledd, Annette
Mail Code: EJ44
Company: NASA Marshall Space Flight Center

Smerke, Robert
Mail Code:
Company: Northrop Corp.

Smith, Antoine F.
Mail Code: SP4
Company: NASA Johnson Space Center

Smith, E.C.
Mail Code: EB01
Company: NASA Marshall Space Flight Center

Smith, Kenneth
Mail Code: EL15
Company: NASA Marshall Space Flight Center

Smith, Norman
Mail Code:
Company: GSTA

Smith, Rick
Mail Code:
Company: Lockheed Corporation

Smith, Jeff
Mail Code:
Company: Northern Kentucky University

Smith, Kim
Mail Code: FB96
Company: Rockwell International

Smith, Bret
Mail Code:
Company: Auburn University

Smith, Benjamin O.
Mail Code:
Company: NASA Aerospace Education Services Project

Smith, J. A.
Mail Code: ES
Company: NASA Johnson Space Center

Smith, S. A.
Mail Code: SD5
Company: NASA Johnson Space Center

Smith, Scott
Mail Code: PL/P2
Company: KRUG Life Sciences

Smith, G.
Mail Code:
Company:

Smolenski, Mark
Mail Code:
Company: Embry Riddle Aeronautical University

Smothermon, Jim
Mail Code: 0B
Company: NASA Johnson Space Center

Smythe, John
Mail Code:
Company: Symbiotic Systems

Snaufer, Mark
Mail Code:
Company: Eagle Engineering

Snook, S.H.
Mail Code:
Company: Loss Prevention Research Center

Snyder, Tim
Mail Code: M/S 213-15
Company:

Sommers, Marc
Mail Code: C22
Company: Lockheed

Sova, Viljar
Mail Code: SP3
Company: NASA Johnson Space Center

Spainhour, J.T.
Mail Code: JJ20
Company: Boeing Aerospace

Sparks, Rhonda
Mail Code: 056-V-30F
Company:

Spector, Eve
Mail Code: 269-6
Company: NASA Ames Research Center

Spencer, John
Mail Code:
Company: Exploration Design Studios

Spoor, Dan
Mail Code:
Company: McDonnell Douglas Corporation

Spradlin, Amye
Mail Code: ND4/WMA
Company: NASA Johnson Space Center

St. Clair, Geneva
Mail Code: 74-60
Company: Boeing Aerospace

Stacy, R.J.
Mail Code:
Company: Australian Army

Stager, Paul
Mail Code:
Company: York University

Stagg, Skip
Mail Code: AD 60
Company: Rockwell International

Stanford, Mike
Mail Code: SD 12
Company: NASA Johnson Space Center

Stankus, Mike
Mail Code: S300A
Company: Sikorsky Aircraft

Stapleton, Christine
Mail Code:
Company: University of Birmingham

Starchville, Thomas
Mail Code:
Company: Penn State University

Starns, Larry
Mail Code: ND312
Company: NASA Johnson Space Center

Staubitz, W.D.
Mail Code:
Company: GTE Products Corp.

Steers, Sherry
Mail Code:
Company: ILI - Quick

Stegemoeller, C. M.
Mail Code: SE3
Company: NASA Johnson Space Center

Steincamp, James
Mail Code: PD31
Company: NASA Marshall Space Flight Center

Stell, Nancy
Mail Code:
Company: Southwest Research Institute

Stempson, Richard
Mail Code:
Company: Lockheed Missiles & Space Company, Inc.

Stephens, John A.
Mail Code:
Company: U.S. Army Laboratory Command

Stevenson, Robert W.
Mail Code: C50
Company: Lockheed Engineering & Sciences Co.

Stewart, John
Mail Code:
Company: Computer Sciences Corporation

Stewart, Suzanne
Mail Code: JM2
Company: NASA Johnson Space Center

Stewart (SD Lib), S.
Mail Code: SD
Company: NASA Johnson Space Center

Stiller, Susan
Mail Code: AFHRL/LRX-
Company: U.S. Air Force

Stilson, Nancy
Mail Code:
Company: Redstone Science Information Center

Stipp, Wade
Mail Code:
Company: Wichita State University

Stokes, Jack
Mail Code: EJ-12
Company: NASA Marshall Space Flight Center

Stoklosa, Janis
Mail Code: U0
Company: NASA Headquarters

Stone, Robert J.
Mail Code:
Company: Advanced Robotics Research Ltd.

Stone, Howard
Mail Code: 365
Company: NASA Langley Research Center

Stonestreet, Robert W.
Mail Code: B20
Company: Lockheed

Stramler, Jim
Mail Code: D07/BAR
Company: Barrios Technology

Strauss, Alvin M.
Mail Code:
Company: Vanderbilt University

Stueber, Matt
Mail Code: C87
Company: Lockheed

Sturman, Brenda
Mail Code: PA
Company: NASA Johnson Space Center

Stuster, Jack
Mail Code:
Company: Anacapa Sciences, Inc.

Stytle, Leo
Mail Code:
Company: TRW

Sullivan, T.
Mail Code: A0S-C
Company: NASA Lewis Research Center

Svedin, Lynn
Mail Code: DL-DSD-24
Company: NASA Kennedy Space Center

Swannack, Dan
Mail Code:
Company:

Swartz, Milton
Mail Code:
Company:

Sweetnam, Don
Mail Code: 301-280
Company: Jet Propulsion Laboratory

Swindells, B. R.
Mail Code: F6E1S
Company: Loral Space Information Systems

Switzer, Kerry
Mail Code: A3J07117-4
Company: McDonnell Douglas-HB

Symons, E.
Mail Code: 500
Company: NASA Lewis Research Center

Tabibian, Hamid
Mail Code: SP44
Company: NASA Johnson Space Center

Takita, Mark
Mail Code:
Company: Lockheed Missiles & Space Co.

Tamasi, G.
Mail Code: P32-06
Company: Boeing Aerospace

Tamblyn, Dell
Mail Code: SP43
Company: NASA Johnson Space Center

Tansley, Brian
Mail Code:
Company: Carleton University

Tarbox, Peg
Mail Code:
Company: Rockwell International

Tarricone, Louis G.
Mail Code:
Company: Barrett Technology Incorporated

Tate, Melissa
Mail Code: A23
Company: Lockheed

Taylor, James A.
Mail Code: SP
Company: NASA Johnson Space Center

Taylor, Nancy
Mail Code:
Company: University of Nevada

Taylor, Mark
Mail Code: MP-21-4-3
Company: Corning, Inc.

Taylor, R.M.
Mail Code:
Company: Royal Air Force

Taylor, Cheryl
Mail Code: 364-BARR
Company: Grumman Space Systems

Taylor, E. C.
Mail Code: ER3
Company: NASA Johnson Space Center

Taylor, J. H.
Mail Code: NS5
Company: NASA Johnson Space Center

Taylor, Cheryl
Mail Code:
Company: Grumman Space Station Technical Library

Technical Libr.,
Mail Code:
Company: Eagle Engineering

Teleki, Charles
Mail Code:
Company: Swales and Associates

Temple, John
Mail Code: MT4
Company: NASA Johnson Space Center

Terlaje, Maria K.
Mail Code:
Company: Law Offices

Thagard, Norm
Mail Code: CB
Company: NASA Johnson Space Center

Thedy, Louis
Mail Code:
Company: Teacher - Junior High School

Theis, Ron
Mail Code: 239-8
Company: NASA Ames Research Center

Thietje, Allen
Mail Code: DF42
Company: NASA Johnson Space Center

Thirsk, Bob
Mail Code:
Company: National Research Council of Canada

Thomas, Ed
Mail Code: 410
Company: NASA Goddard Space Flight Center

Thomas, Frank P.
Mail Code: ED55
Company: NASA Marshall Space Flight Center

Thomas, Richard
Mail Code:
Company: Ratcom, Inc.

Thomas, Ike
Mail Code: B22
Company: Lockheed Engineering and Sciences Company

Thomas, Michael
Mail Code: EP5
Company: NASA Johnson Space Center

Thompson, Brenda
Mail Code: EA131
Company: NASA Johnson Space Center

Thompson, Bob
Mail Code: PT31
Company: NASA Marshall Space Flight Center

Thompson, Brenda
Mail Code: MDC-2 5293
Company: McDonnell Douglas Corporation

Thompson, Clark
Mail Code: MDC-4 2446
Company: McDonnell Douglas Space Systems Company

Thorne, Barbara
Mail Code: ASSI-CompC
Company: NASA Kennedy Space Center

Thornton, Coleen
Mail Code:
Company: Oak Ridge National Laboratory

Thornton, William
Mail Code: SD-5
Company: NASA Johnson Space Center

Thorson, R.H.
Mail Code: PC
Company: NASA Johnson Space Center

Thurman, Tim
Mail Code:
Company: Auburn Engineering

Tichvon, Michael T.
Mail Code:
Company: TRW

Tiedt, E. W.
Mail Code: SM3
Company: NASA Johnson Space Center

Tillman, Barry
Mail Code:
Company: Tillman Ergonomics Co.

Tinius, Richard
Mail Code: E001
Company: NASA Marshall Space Flight Center

Tinsler, Thomas R.
Mail Code: C42
Company: Lockheed

Tolbert, D.
Mail Code: F096
Company: NASA Kennedy Space Center

Toledo, Sue
Mail Code:
Company: Netrologic

Toney, Dennis B.
Mail Code: A90A32332B
Company: McDonnell Douglas Corporation

Tormo-Intravia, Josefa
Mail Code: 240A
Company: NASA Johnson Space Center

Toups, Larry
Mail Code: C03
Company: Lockheed

Traybar, Joseph J.
Mail Code: ACD-230
Company: c/o FAA Technical Center

Trevino, Robert C.
Mail Code: MG
Company: NASA Johnson Space Center

Tripp, Tim
Mail Code:
Company: SPAR Aerospace Limited

Trotter, John
Mail Code:
Company: University of California Los Angeles

Truelock, Steve
Mail Code: SP3
Company: NASA Johnson Space Center

Tsuya, Naoki
Mail Code:
Company: Mitsubishi Electric Corporation

Turner, Josie
Mail Code: SE/MMA
Company: NASA Johnson Space Center

Turner, Larry
Mail Code: ED65
Company: NASA Marshall Space Flight Center

Ueno, S.
Mail Code:
Company: National Space Development Agency of Japan

Ulibarri, V. Dianne
Mail Code:
Company: Michigan State University

Ulrich, George
Mail Code: DF
Company: NASA Johnson Space Center

Ulrich, George
Mail Code: AS
Company: NASA Headquarters

Underwood, Leroy
Mail Code: WMA-225
Company: Webb, Murray and Associates

Univ. Library, Embry-Riddle
Mail Code:
Company: Embry-Riddle Aeronautical University

Upshaw, Kathy
Mail Code: EJ11
Company: NASA Marshall Space Flight Center

Urban, Tim
Mail Code: C87
Company: Lockheed

Urie, Thomas R.
Mail Code:
Company: U.S. Air Force

Valle, Gerard
Mail Code: ES-2
Company: NASA Johnson Space Center

Van Colen, Peter
Mail Code:
Company: ILC Space Systems

Van Cott, Harold P.
Mail Code:
Company: National Research Council

Van Valkenburgh, Charles
Mail Code:
Company: ESSEX Corporation

Vander Ark, Steve
Mail Code: HMF/P2
Company: KRUG Life Sciences

Vanderwarker, Don
Mail Code: NB2
Company: NASA Johnson Space Center

Vargas-Alfaro, Lorenzo M.
Mail Code:
Company:

Varma, Suneet
Mail Code:
Company: Tufts University

Varnon, Dake
Mail Code: C44
Company: Lockheed Martin

Varshine, Alice
Mail Code: B-12
Company: Fairchild Defense

Vasilik, Brian
Mail Code:
Company: University of the Arts

Vaughan, C. A.
Mail Code: EA11
Company: NASA Johnson Space Center

Vaughn, Robert D.
Mail Code: EK52
Company: NASA Johnson Space Center

Vazquez, Luis
Mail Code: EK24
Company: NASA Johnson Space Center

Veach, Bill
Mail Code: A96J122447
Company: McDonnell Douglas Corporation

Venson, Wade
Mail Code:
Company: Johnson Engineering Corporation

Verinder, Irene
Mail Code: ES2
Company: NASA Johnson Space Center

Vickery, Andrew F.
Mail Code:
Company: British Aerospace Public Limited Co.

Vickery, Chris
Mail Code: K78-08
Company: Boeing Military Airplane Co.

Vickery, A.P.
Mail Code: FPC 320
Company: British Aerospace Public Limited Co.

Vicolle, Sharon
Mail Code: JM33
Company: NASA Johnson Space Center

Vincent, James P.
Mail Code: SP31
Company: NASA Johnson Space Center

Vining, Ross F.
Mail Code:
Company: Garvan Institute of Medical Research

Vinopel, Tim
Mail Code: 8C-09
Company: Boeing Aerospace

Vinson, James E.
Mail Code: B08
Company: Lockheed

Vitcenda, Angela
Mail Code:
Company: Astronautics Corporation Technical Center

Voecks, Gerald
Mail Code: 125-224
Company: Jet Propulsion Laboratory

Vogt, R. A.
Mail Code: ES3
Company: NASA Johnson Space Center

Voss, Susan
Mail Code: MS K557
Company: Los Alamos National Laboratory

Voyt, Gregory
Mail Code: CA461
Company: NASA Johnson Space Center

Walden, Elizabeth
Mail Code: 5313
Company: Naval Air Systems Command

Waligora, James M.
Mail Code: SD5
Company: NASA Johnson Space Center

Walker, Michael J.
Mail Code:
Company: Clemson University

Walker, Danna
Mail Code:
Company:

Walker, Bruce
Mail Code:
Company: Rice University

Wallace, Robert J.
Mail Code:
Company: Research Triangle Institute

Ward, Bob
Mail Code: T-623
Company: McDonnell Douglas Corporation

Ward, Tex
Mail Code: C18
Company: Lockheed

Ward, Lynn
Mail Code: C12
Company: Lockheed

Ward, Brenda
Mail Code: 0B
Company: NASA Johnson Space Center

Warnix, Jim
Mail Code: C60
Company: Lockheed

Waters, Patrick
Mail Code:
Company: U.S. Army Human Engineering Laboratory

Watlington, Joyce
Mail Code:
Company: U.S. Army Laboratory Command

Weaver, Lee
Mail Code:
Company: Weaver Enterprizes

Weaver, Laurie A.
Mail Code: SP-33
Company: NASA Johnson Space Center

Webb, Ruth
Mail Code: DH6
Company: Omniplan Corporation

Webb, David
Mail Code:
Company: University of North Dakota

Webbon, Bruce
Mail Code: 239-15
Company: NASA Ames Research Center

Weeter, Director
Mail Code: BR
Company: U.S. Army Laboratory Command

Wei, Jinhe
Mail Code: EB
Company: NASA Headquarters c/o Ron White

Weidemann, Anne
Mail Code:
Company: SINTEF UNIMED

Weiss, Sue
Mail Code:
Company: E-Systems, ECI Division

Weiss, Scott
Mail Code: F8M2A
Company: Loral/Calspan

Weisskopf, George A.
Mail Code: EV5
Company: NASA Johnson Space Center

Weisz, John D.
Mail Code:
Company: U.S. Army Laboratory Command

Welman, Frank
Mail Code:
Company: Arinc Research Corp.

Wendeln, Marcy C.
Mail Code:
Company: Space Tech Ventures

Wenke, Betty
Mail Code:
Company: Pneu Devices

Werlin, Stanley
Mail Code:
Company: Arthur D. Little Company

Werneth, Russell
Mail Code: 442
Company: NASA Goddard Space Flight Center

West, Philip
Mail Code: EC5
Company: NASA Johnson Space Center

Weyandt, Charles
Mail Code:
Company: Ford Aerospace and Commercial Corp., WDL

Wheeler, Garry
Mail Code: SP331
Company: Johnson Engineering Corporation

Whitbeck, B.
Mail Code:
Company: Eagle Engineering

White, David R.
Mail Code: SE3
Company: NASA Johnson Space Center

White, David M.
Mail Code:
Company:

White, Tim
Mail Code: SA
Company: NASA Johnson Space Center

White, Steven
Mail Code:
Company: Australia Post

White, Paul
Mail Code:
Company: Professional & Specialized Services

Whitehurst, Troy
Mail Code: 4S/HS-30
Company: Boeing Aerospace

Whitelaw, V. A.
Mail Code: MS2
Company: NASA Johnson Space Center

Whiteman, Chris
Mail Code: C33
Company: Lockheed

Whiting, B.
Mail Code: MC 5420
Company: IBM-Federal Sector Div.

Whitlock, Patricia
Mail Code:
Company:

Whitmore, Mihriban
Mail Code: C81
Company: Lockheed

Whitsett, Ed
Mail Code: ER1
Company: NASA Johnson Space Center

Widdel, Heino
Mail Code:
Company: Forschungsinstitut fur Anthropotechnik

Wiegmann, Sharon
Mail Code: EL55
Company: NASA Marshall Space Flight Center

Wiegrefe, Don
Mail Code: BIO-3
Company: Bionetics Corp.

Wiggins, Ken
Mail Code:
Company: NASA Aerospace Education Services Project

Wilde, Richard C.
Mail Code: 1A-2-X65
Company: Hamilton Standard Div. UTC

Wiley, D. L.
Mail Code: NB5
Company: NASA Johnson Space Center

Wilhelm, Horst
Mail Code: OT-112
Company: MBB/ERNO

Wilkes, Lee
Mail Code: ZR-12
Company: Aerospace Corporation

Williams, Herm
Mail Code:
Company: Navy Personnel Research & Development Center

Williams, Marshall
Mail Code: 4L26
Company: Boeing Advanced Systems

Williams, David R.
Mail Code: FB-81
Company: Rockwell International

Williams, Bob
Mail Code:
Company: System Engineering Consultants

Williams, J.
Mail Code: SD
Company: NASA Johnson Space Center

Williams, Kyle
Mail Code:
Company: BRW

Williams, Joyce
Mail Code: CR1
Company: Air Force Tech Library

Williams, Jeff
Mail Code:
Company: Grumman Space Systems

Williams, Henry L.
Mail Code:
Company: Eagle Engineering

Williams, Trevor
Mail Code:
Company: University of Cincinnati

Williges, Bob
Mail Code:
Company: Virginia Tech

Willshire, Kelli
Mail Code: 152-D
Company: NASA Langley Research Center

Willstadter, Bob
Mail Code: 7F-73
Company: Boeing Aerospace

Wilmington, Robert
Mail Code: C81
Company: Lockheed

Wilson, Nancy
Mail Code: C44
Company: Lockheed

Wineman, Dave
Mail Code:
Company: IDAB Incorporated

Winisdoerffer, Francis
Mail Code: MU/TEH
Company: Aerospatiale, Incorporated

Winkler, Edward R.
Mail Code:
Company: McDonnell Douglas Corporation

Winkler, H. Eugene
Mail Code: EC3
Company: NASA Johnson Space Center

Wise, John
Mail Code:
Company: Embry-Riddle Aeronautical University

Wise, Dennis V.
Mail Code: C44
Company: Lockheed

Wolfer, B. M.
Mail Code: KC21
Company: NASA Johnson Space Center

Womack, W.D.
Mail Code: ID2
Company: General Electric

Wong, Clifford
Mail Code:
Company:

Wood, Daniel
Mail Code: B10-1
Company: NASA Kennedy Space Center

Woodard, Daniel
Mail Code: BIO-1
Company: Bionetics Corp.

Woods, Tom
Mail Code: MDC-2 5175
Company: McDonnell Douglas Corporation

Woods, Ronnie
Mail Code: VK2
Company: NASA Kennedy Space Center

Woodson, Wesley E.
Mail Code:
Company: Man Factors, Inc.

Woolard, Lynn
Mail Code:
Company: U.S. Air Force Support Office

Woolford, Barbara J.
Mail Code: SP3
Company: NASA Johnson Space Center

Wright, Michael R.
Mail Code: 743
Company: NASA Goddard Space Flight Center

Wright, Don
Mail Code:
Company: Vitro Corporation

Ximenes, Sam
Mail Code:
Company: Grumman S.S Pro. Support Div.

Yan Chau, Mike
Mail Code: FR-321
Company: NASA Johnson Space Center

Yang, Tracy
Mail Code: SD4
Company: NASA Johnson Space Center

Yarbrough, Leonard
Mail Code: EB133
Company: University of Alabama Huntsville

Yastrop, Gloria
Mail Code:
Company: Raytheon Services

Yasutake, Taizo
Mail Code:
Company: ITU Research

Yates, Rusty
Mail Code: EV
Company: NASA Johnson Space Center

Yeary, D. W.
Mail Code: BN4
Company: NASA Johnson Space Center

Yee, Andrew
Mail Code: SD-5
Company: NASA Johnson Space Center

Yeo, J. E.
Mail Code: EG41
Company: NASA Johnson Space Center

Yeung, Simon
Mail Code:
Company: Hong Kong Polytechnic University

York, M. M.
Mail Code: F6LOS
Company: Loral Space Information Systems

Yoshimura, Yoshi
Mail Code: KN
Company: NASDA

Young, Freddie
Mail Code: OB/ETS
Company: NASA Johnson Space Center

Zachary, Wayne W.
Mail Code:
Company: CHI Systems Inc.

Zahler, P. A.
Mail Code: BJ21
Company: NASA Johnson Space Center

Zakharov, Alexander V.
Mail Code:
Company: USSR Academy of Sciences, Space Research Inst

Zakharova, Olga N.
Mail Code:
Company: USSR Union of Architecture

Zavala, Ruben
Mail Code: SM3
Company: NASA Johnson Space Center

Zetka, E. F.
Mail Code: EA43
Company: NASA Johnson Space Center

Zivley, Mark
Mail Code: C44
Company: NASA Johnson Space Center

Zrowka, Peter
Mail Code:
Company: Life Support Services Inc.

Zumbahlen, R. W.
Mail Code: LESC/A-23
Company: NASA Johnson Space Center

Zuraski, Theresa C.
Mail Code:
Company: AAMI

Zuschlag, Bodi
Mail Code: 172
Company: Teledyne-Brown Engineering

NASA-STD-3000-vol-3

NASA-STD-3000

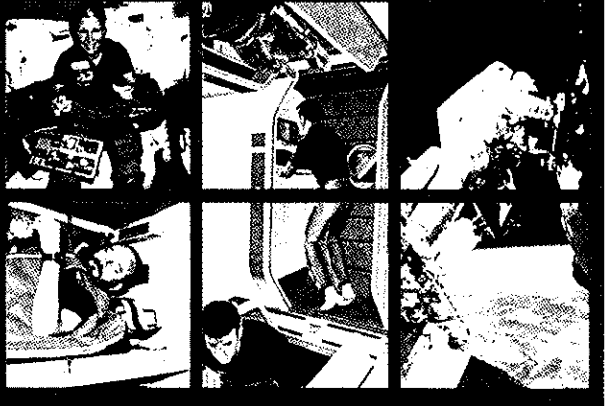

NASA

National Aeronautics and
Space Administration

*PKG2512

NASA JOHN F. KENNEDY SPACE CENTER
3 1772 00058 7987

MAN-SYSTEMS INTEGRATION STANDARDS

NASA-STD-3000 HANDBOOK

VOLUME III

JOHN F. KENNEDY SPACE CENTER LIBRARY
DOCUMENTS DEPARTMENT
CIRCULATION COPY #1

AUGUST 1994

NASA
National Aeronautics and
Space Administration

FORWARD

This booklet provides basic, quantitative human engineering design requirements in pictorial, tabular, and graphical format. It is to be used as a small portable handbook reference for users of NASA-STD-3000, Volume I. Since the primary purpose is to provide a portable reference, the principles, explanations, limitations, and application techniques associated with the data are intentionally omitted. In addition, while the headings for all requirements have been included, top-level requirements headings, the text for non-specific requirements and those requirements considered inappropriate for *"field use"* have been omitted. Accordingly, this abbreviated presentation assumes that the user is familiar with the bases and limitations of the given data or will consult applicable references to insure appropriate application of the data.

Within the context of this handbook, "*field use*" is defined as the application of human performance standards relative to space module features, environments, hardware, and software. The *"field"* includes but is not limited to meetings, design reviews, crewstation reviews, sketch evaluations, software architecture reviews, demonstrations, etc. The data contained herein should be used to remind or point out applicable standards or requirements and aid in the inspection of environments, systems, and subsystems.

In general, this booklet is a digest of material appearing in NASA-STD-3000, Volume I. The data herein is intended for field reference only. The user is therefore referred to that document and its references for required supplementary information.

Comments or suggestions regarding this Handbook can be forwarded to Mr. John Jackson, Book Manager, Mail Code SP2, Johnson Space Center, Houston, TX 77058.

Copies of this document can be obtained from the Book Manager at Johnson Space Center or from the CSERIAC Program Office, AL/CFH/CSERIAC Bldg. 248, 2255 H Street, Wright-Patterson AFB, OH 45433-7022.

This document is the result of the collaborative efforts of NASA, CSERIAC, and CAMUS, Inc.

ABOUT CSERIAC

The Crew System Ergonomics Information Analysis Center **(CSERIAC)** is the central source for up-to-date human factors information and technologies. CSERIAC provides a variety of products and services to government, industry, and academia promoting the use of ergonomics in the design of human-operated equipment and manned systems. On a cost recovery basis, **CSERIAC** will:

- Distribute ergonomic technologies and publications.
- Perform customized bibliographic searches and reviews.
- Prepare state-of-the-art reports and critical reviews.
- Conduct specialized analyses and evaluations.
- Provide workshop administration support.

CSERIAC is a Department of Defense organization sponsored by the Defense Technical Information Center. It is managed by the Human Engineering Division of the Armstrong Laboratory, and operated by the University of Dayton Research Institute.

To obtain further information, contact:

CSERIAC Program Office

AL/CFH/CSERIAC Bldg 248

2255 H Street

Wright-Patterson AFB OH 45433-7022

Phone: (513)255-4842

Fax: (513)255-4823

TABLE OF CONTENTS

NOTE: Handbook contains only boldfaced material

1.0 INTRODUCTION

1.1 PURPOSE

1.2 OVERVIEW

1.3 SCOPE, PRECEDENCE, AND LIMITATIONS

1.4 HOW TO USE THE DOCUMENTS

1.5 HOW TO USE THE STANDARDS RELATIONAL DATABASE

2.0 GENERAL REQUIREMENTS

2.1 INTRODUCTION

2.2 GENERAL DESIGN CONSIDERATIONS

2.3 GENERAL DESIGN REQUIREMENTS

3.0 ANTHROPOMETRY AND BIOMECHANICS

3.1 INTRODUCTION

3.2 GENERAL ANTHROPOMETRICS & BIOMECHANICS RELATED DESIGN CONSIDERATIONS

3.3 ANTHROPOMETRIC AND BIOMECHANICS RELATED DESIGN DATA

4.0 HUMAN PERFORMANCE CAPABILITIES

4.1 INTRODUCTION

4.2 VISION

4.3 AUDITORY SYSTEM

4.4 OLFACTION AND TASTE

4.5 VESTIBULAR SYSTEM

4.6 KINESTHESIA

4.7 REACTION TIME

4.8 MOTOR SKILLS (Coordination)

4.9 STRENGTH

4.10 WORKLOAD

5.0 NATURAL AND INDUCED ENVIRONMENTS

5.1 ATMOSPHERE

5.2 MICROGRAVITY

5.3 ACCELERATION

5.4 ACOUSTICS

5.5 VIBRATION

5.6 (THIS PARAGRAPH WAS NOT USED)

5.7 RADIATION

5.8 THERMAL ENVIRONMENT

5.9 COMBINED ENVIRONMENTAL EFFECTS

6.0 CREW SAFETY

6.1 INTRODUCTION

6.2 GENERAL SAFETY

6.3 MECHANICAL HAZARDS

6.4 ELECTRICAL HAZARDS

6.5 TOUCH TEMPERATURE

6.6 FIRE PROTECTION AND CONTROL

6.7 DECOMPRESSION HAZARDS

7.0 HEALTH MANAGEMENT

7.1 INTRODUCTION

7.2 PREVENTATIVE CARE

7.3 MEDICAL CARE

8.0 ARCHITECTURE

8.1 INTRODUCTION

8.2 OVERALL ARCHITECTURAL CONSIDERATIONS AND REQUIREMENTS

8.3 CREW STATION ADJACENCIES

8.4 COMPARTMENT AND CREW STATION ORIENTATION

8.5 LOCATION CODING

8.6 ENVELOPE GEOMETRY FOR CREW FUNCTIONS

8.7 TRAFFIC FLOW

8.8 TRANSLATION PATHS

8.9 MOBILITY AIDS AND RESTRAINTS ARCHITECTURAL INTEGRATION

8.10 HATCHES AND DOORS

8.11 WINDOW INTEGRATION

8.12 INTERIOR DESIGN AND DECOR

8.13 LIGHTING

9.0 WORKSTATIONS

9.1 INTRODUCTION

9.2 WORKSTATION LAYOUT

9.3 CONTROLS

9.4 DISPLAYS

9.5 LABELING AND CODING

9.6 USER/COMPUTER INTERACTION

10.0 ACTIVITY CENTERS

10.1 INTRODUCTION

10.2 PERSONAL HYGIENE

10.3 BODY WASTE MANAGEMENT FACILITIES

10.4 CREW QUARTERS

10.5 GALLEY AND WARDROOM

10.6 MEETING FACILITY

10.7 RECREATION FACILITY

10.8 MICROGRAVITY COUNTERMEASURE FACILITY

10.9 SPACE MEDICAL FACILITY

10.10 LAUNDRY FACILITY

10.11 TRASH MANAGEMENT FACILITY

10.12 STOWAGE FACILITY

11.0 HARDWARE AND EQUIPMENT

11.1 INTRODUCTION

11.2 TOOLS

11.3 DRAWERS AND RACKS

11.4 CLOSURES AND COVERS

11.5 MOUNTING HARDWARE

11.6 HANDLES AND GRASP AREAS (FOR PORTABLE ITEMS)

11.7 RESTRAINTS

11.8 MOBILITY AIDS

11.9 FASTENERS

11.10 CONNECTORS

11.11 WINDOWS

11.12 PACKAGING

11.13 CREW PERSONAL EQUIPMENT

11.14 CABLE MANAGEMENT

12.0 DESIGN FOR MAINTAINABILITY

12.1 INTRODUCTION

12.2 DESIGN FOR MAINTAINABILITY DESIGN CONSIDERATIONS

12.3 DESIGN FOR MAINTAINABILITY DESIGN REQUIREMENTS

13.0 FACILITY MANAGEMENT

13.1 INTRODUCTION

13.2 HOUSEKEEPING

13.3 INVENTORY CONTROL

13.4 INFORMATION MANAGEMENT

14.0 EXTRAVEHICULAR ACTIVITY

14.1 GENERAL EVA INFORMATION

14.2 EVA PHYSIOLOGY

14.3 EVA ANTHROPOMETRY

14.4 EVA WORKSTATIONS AND RESTRAINTS

4.5 EVA MOBILITY AND TRANSLATION

14.6 EVA TOOLS, FASTENERS, AND CONNECTORS

14.7 EVA ENHANCEMENT SYSTEMS

IND-1 INDEX

ERRATA

3.3.1.3 Body Size Data Design Requirements

3.3.2.3 Joint Motion Data Design Requirements

3.3.2.3.1 Joint Motion Data For Single Joint Design Requirements

3.3.2.3.2 Joint Motion Data For Two Joint Design Requirements

3.3.3.3 Reach Data Design Requirements

3.3.3.3.1 Functional Reach Design Requirements

3.3.3.3.2 Strike Reach Envelope Data Design Requirements

3.3.4.3 Neutral Body Posture Data Design Requirements

Parameter	Anthropometric Change		
	Short-term mission (1 to 14 days)	Long-term mission (more than 14 days)	
		Pre vs. during mission	Pre vs. during mission
Height	Slight increase during first week (~ 1.3 cm or 0.5 in). Height returns to normal * R+0 Increases caused by spine lengthening	Increases during first two weeks then stabilizes at approximately 3% of pre-mission baseline. Increases caused by spine lenthening	Returns to normal on R + 0
Circumferences	Circumference changes in chest, waist, and limbs. See Figure 3.2.3.1-2 for chest and waist changes. Changes due primarily to fluid shifts		
Mass	Postflight weight losses average 3.4%; about 2/3 of the loss is due to water loss, the remainder due to loss of lean body mass and fat. Center of mass shifts headward approximately 3 - 4 cm (1 - 2 in). See Paragraph 3.3.7.3.2.1 for details	Inflight weight losses average 3 - 4% during first 6 days, thereafter, weight gradually declines for the remainder of the mission. Early inflight losses are probably due to loss of fluids; later losses are metabolic. Center of mass shifts hea approximately 3 - 4 cm (1 - 2 in)	Rapid weight gain during first 5 days postflight, mainly due to replinishment of fluids. Slower weight gain from R + 5 days to R + 2 or 3 weeks
Limb Volume	Inflight leg volume decreases exponentially during first mission day; thereafter, rate of decrease declines until reaching a plateau within 3 - 5 days. Postflight decrements in leg volume up to 3%; rapid increase immediately followed by slower return to return to pre-mission baseline	Early inflight period same as short missions. Leg volume may continue to decrease slightly throughout mission. Arm volume decreases slightly.	Rapid increase in leg volume immediately postflight, followed by slower return to pre-mission baseline.
Posture	Immediate assumption of neutral body posture (see Paragraph 3.3.4)	Immediate assumption of neutral body posture (see Paragraph 3.3.4)	Rapid return to pre-mission posture.

* Recovery day plus post mission days

MSIS 265

Figure 3.2.3.1-1 Anthropometric Changes in Weightlessness

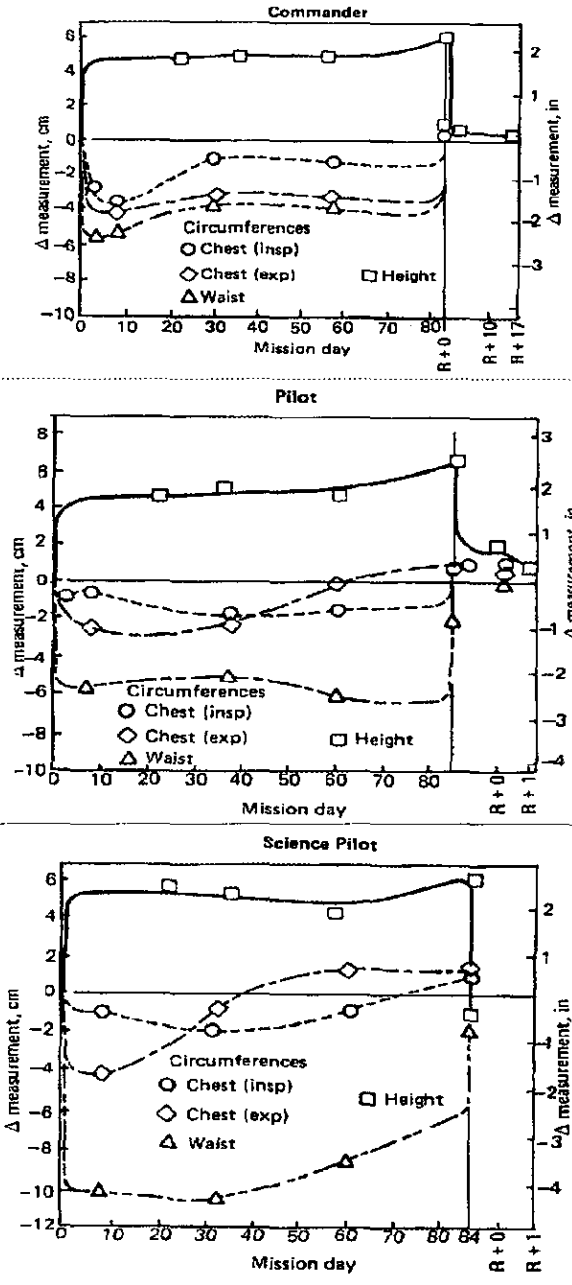

Figure 3.2.3.1-2 Micro-Gravity Changes in Height, Waist, and Chest Measured in Skylab Crewmen. One-G Measurements as a Baseline

MSIS 266

	Stature secular growth rate (per decade)
American male	1.0 cm (0.4 in)
Japanese female	2.6 cm (1.0 in)

MSIS-267

Figure 3.2.3.3-1 Assumed Secular Growth Rate of Stature

Figure	Joint movement (note b)	Range of motion (degrees)			
		Males (note a)		Females (note a)	
		5th percentile	95th percentile	5th percentile	95th percentile
1	Neck, rotation right	73.3	99.8	74.9	108.8
	Neck, rotation left	74.3	99.1	72.2	109.0
2	Neck, flexion	34.5	71.0	46.0	84.4
	Neck, extension	65.4	103.0	64.9	103.0
3	Neck, lateral right	34.9	63.5	37.0	63.2
	Neck, lateral left	35.5	63.5	29.1	77.2
4	Shoulder, abduction	173.2	188.7	172.6	192.9
5	Shoulder, rotation lat	46.3	96.7	53.8	85.8
	Shoulder, rotation med	90.5	126.6	95.8	130.9
6	Shoulder, flexion	164.4	210.9	152.0	217.0
	Shoulder, extension	39.6	83.3	33.7	87.9
7	Elbow, flexion	140.5	159.0	144.9	165.9
8	Forearm, pronation	78.2	116.1	82.3	118.9
	Forearm, supination	83.4	125.8	90.4	139.5
9	Wrist, radial	16.9	36.7	16.1	36.1
	Wrist, ulnar	18.6	47.9	21.5	43.0
10	Wrist, flexion	61.5	94.8	68.3	98.1
	Wrist, extension	40.1	78.0	42.3	74.7
11	Hip, flexion	116.5	148.0	118.5	145.0
12	*Hip, abduction*	*26.8*	*53.5*	*27.2*	*55.9*
13	Knee, flexion	118.4	145.6	125.2	145.2
14	Ankle, plantar	36.1	79.6	44.2	91.1
	Ankle, dorsi	8.1	19.9	6.9	17.4

Notes: a. Data was taken 1979 and 1980 at NASA-JSC by Dr. William Thornton and John Jackson. The study was made using 192 males (mean age 33) 22 females (mean age 30) astronaut candidates (see Reference 365)
b. Limb range is average of right and left limb movement.

MSIS-340
1 of 3

Figure 3.3.2.3.1-1 Joint Movement Ranges for Males and Females

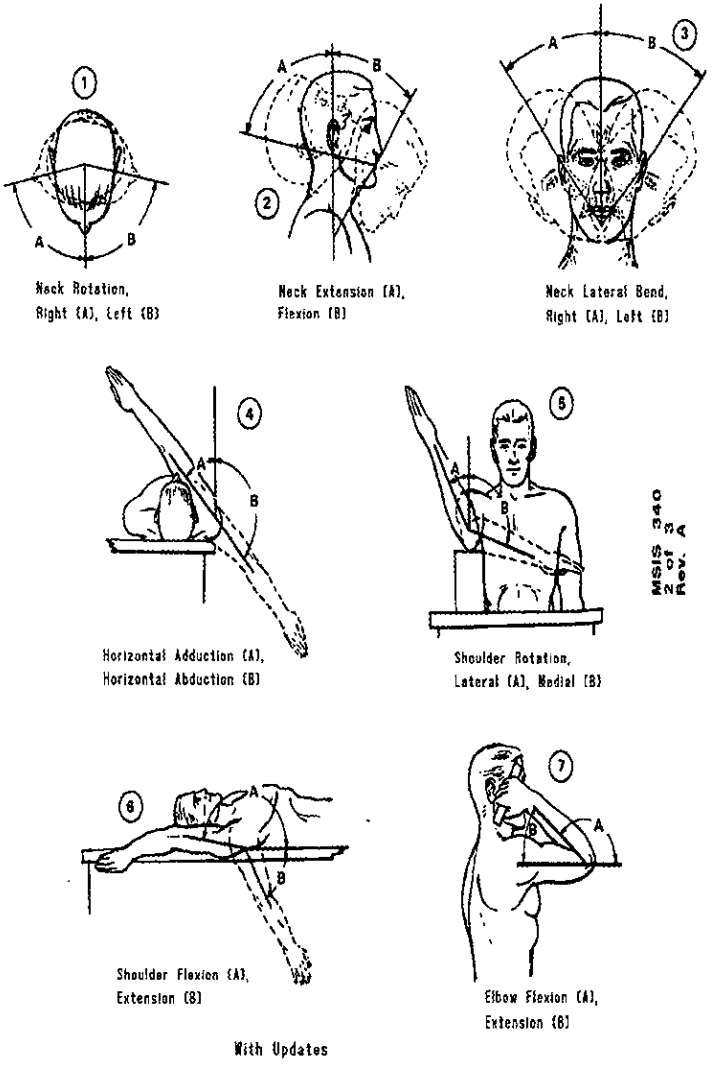

Figure 3.3.2.3.1-1 Joint Movement Ranges for Males and Females (Continued)

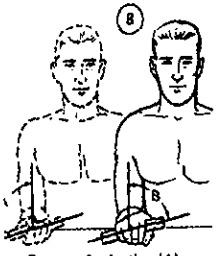

Forearm Supination (A), Pronation (B)

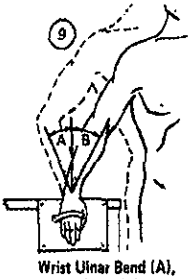

Wrist Ulnar Bend (A), Radial Bend (B)

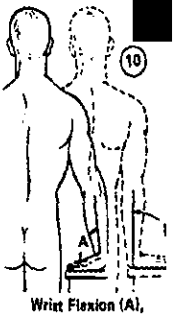

Wrist Flexion (A), Extension (B)

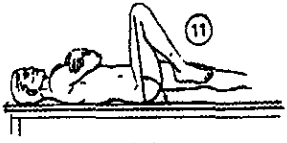

Hip Flexion

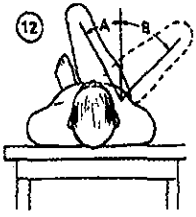

Hip Adduction (A), Abduction (B)

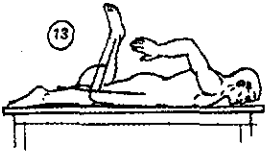

Knee Flexion, Prone

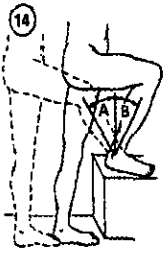

Ankle Plantar Extension (A), Dorsi Flexion (B)

MSIS-340

Figure 3.3.2.3.1-1 Joint Movement Ranges for Males and Females (Continued)

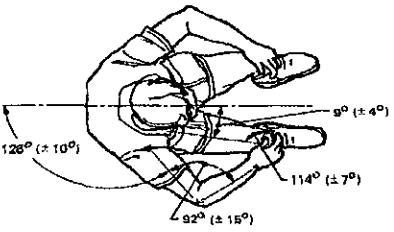

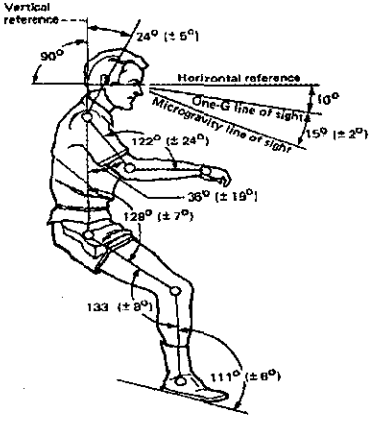

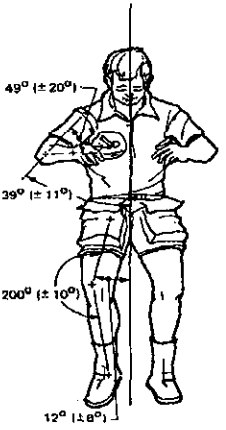

Note:
The segment angles shown are means. Values in parentheses are standard deviations about the mean. The data was developed in Skylab and is based on the measurement of 3 subjects.

Figure 3.3.4.3-1 Neutral Body Posture

MSIS 285

3.3.5.3 Body Surface Area Data Design Requirements

3.3.6.3 Body Volume Data Design Requirements

3.3.6.3.1 Whole-Body Volume Data Design Requirements

3.3.6.3.2 Body Segment Volume Data Design Requirements

3.3.7.3 Body Mass Properties Data Design Requirements

3.3.7.3.1 Body Mass Data Design Requirements

3.3.7.3.1.1 Whole-Body Mass Data Design Requirements

3.3.7.3.1.2 Body Segment Mass Data Design Requirements

3.3.7.3.2 Center of Mass Data Design Requirements

3.3.7.3.2.1 Whole-Body Center of Mass Data Design Requirements

3.3.7.3.2.2 Body Segments Center of Mass Data Design Requirements

3.3.7.3.3 Moment of Inertia Data Design Requirements

3.3.7.3.3.1 Whole-Body Moment of Inertia Data Design Requirements

3.3.7.3.3.2 Body Segments Moment of Inertia Data Design Requirements

NOTES

NOTES

4.9.3 Strength Design Requirements

Strength data that shall be used to guide design work are provided below. The weakest crew member in the specified design population shall be accommodated.

(Refer to Ref. 16 for additional data on 1-G strength.)

a. Grip Force:
   1. Grip strength, as a function of the size of the gripped object, is provided for men in Figure 4.9.3-1.
   2. Maximum grip strength for men (5th, 50th, and 95th percentile) is given in Figure 4.9.3-2.
   3. Grip strength for females is shown in Figure 4.9.3-3.

b. Arm, Hand, and Thumb/Finger Strength - Figure 4.9.3-4 presents arm, hand and thumb/finger strength for fifth percentile males. These figures must be corrected for females (see Figure 4.9.3-5).
c. Male/Female Muscular Strength - Figure 4.9.3-5 provides a comparison of male and female muscular strength for different muscle groups. These data allow a more accurate extrapolation from male to female strength data than is provided by the old method of assuming females have two thirds the strength of men.
   (Refer to Ref. 16 for more detailed male/female comparison data.)
d. Static Push Force - Maximal static push forces for adult males are shown in Figure 4.9.3-6. While these data were collected in a 1-G situation, the fact that they do not depend on friction resulting from body weight makes them applicable to microgravity. Corrections will have to be made for females (see Figure 4.9.3-5).
e. Leg Strength - Leg strength for the 5th percentile male as a function of various thigh and knee angles is reported in Figure 4.9.3-7. Estimates of female leg strength can be made from these data using the correction factors provided in Figure 4.9.3-5.
f. Torque Strength - Maximum hand torque data are provided in Figure 4.9.3-8.

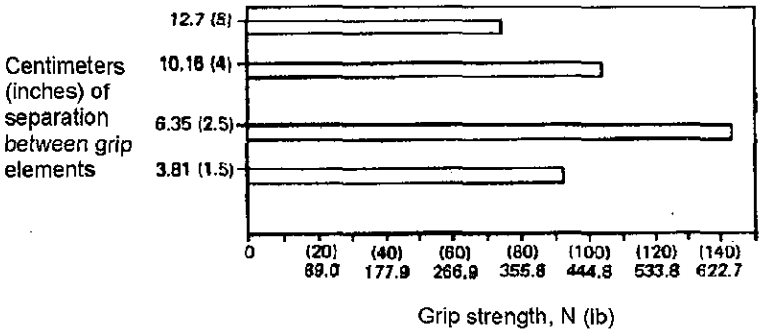

Figure 4.9.3-1 Male Grip Strength as a Function of the Separation Between Grip Elements

MSIS 200

Population	Percentiles, N (lb)			
	5th	50th or mean	95th	Population S.D.
U.S. Air Force personnel, aircrewmen:				
Right hand	467 (105)	596 (134)	729 (164)	80.1 (18.0)
Left hand	427 (96)	552 (124)	685 (154)	71.2 (16.0)

Figure 4.9.3-2 Grip Strength for Males

MSIS 201

Population	Percentiles, N (lb)			Population S.D.
	5th	50th	95th	
U. S. Navy personnel Mean of both hands	258 (58)	325 (73)	387 (87)	39.1 (8.8)
U. S. Industrial workers: Preferred hand	254 (57)	329 (74)	405 (91)	45.8 (10.3)

Figure 4.9.3-3 Grip Strength for Females

MSIS 202

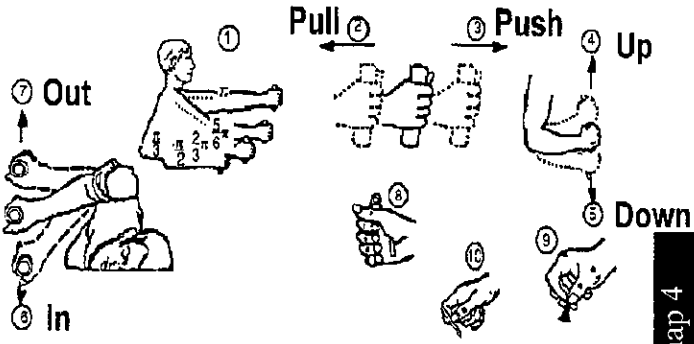

Arm Strength (N)

(1) degree of elbow flexion (rad)	(2) Pull L**	(2) Pull R**	(3) Push L	(3) Push R	(4) Up L	(4) Up R	(5) Down L	(5) Down R	(6) In L	(6) In R	(7) Out L	(7) Out R
π	222	231	187	222	40	62	58	76	58	89	36	62
5/6 π	187	249	133	187	67	80	80	89	67	89	36	67
2/3 π	151	187	116	160	76	107	93	116	89	98	45	67
1/2 π	142	165	98	160	76	89	93	116	71	80	45	71
1/3 π	116	107	96	151	67	89	80	89	76	89	53	76

Hand and Thumb- Finger Strength (N)

	(8) Hand Grip L	(8) Hand Grip R	(9) Thumb-Finger Grip (Palmer)	(10) Thumb-Finger Grip (Tips)
Momentary Hold	250	260	60	60
Sustained Hold	145	155	35	35

* Elbow angle shown in radians
** L=Left; R=Right

Arm Strength (lb)

(1) degree of elbow flexion deg	(2) Pull L**	(2) Pull R**	(3) Push L	(3) Push R	(4) Up L	(4) Up R	(5) Down L	(5) Down R	(6) In L	(6) In R	(7) Out L	(7) Out R
180	50	52	42	50	9	14	13	17	13	20	8	14
150	42	56	30	42	15	18	18	20	15	20	8	15
120	34	42	26	36	17	24	21	26	20	22	10	15
90	32	37	22	36	17	20	21	26	16	18	10	16
60	26	24	22	34	15	20	18	20	17	20	12	17

Hand and Thumb- Finger Strength (lb)

	(8) Hand Grip L	(8) Hand Grip R	(9) Thumb-Finger Grip (Palmer)	(10) Thumb-Finger Grip (Tips)
Momentary Hold	66	59	13	13
Sustained Hold	33	35	8	8

** L=Left; R=Right

Figure 4.9.3-4 Arm, Hand, and Thumb/Finger Strength (5th Percentile Male Data)

MSIS 203

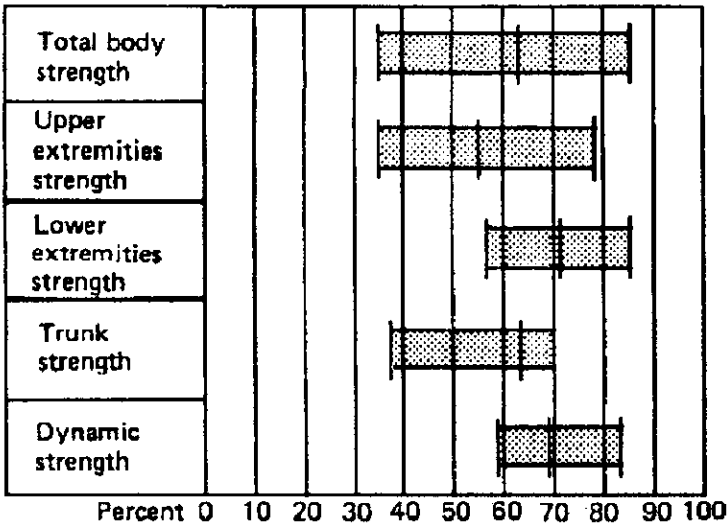

Note:
Female strength as a percentage of male strength for different conditions. The vertical line within each shaded bar indicates the mean percentage difference. The end points of the shaded bars indicate the range.

Figure 4.9.3-5 Comparison of Female vs. Male Muscular Strength

MSIS 204

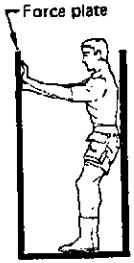

Force-plate (1) height	Distances (2)	Force, N (lbf) Means	Force, N (lbf) SD
		Both hands	
100 percent of shoulder height	50	583 (131)	142 (32)
	60	667 (150)	160 (36)
	70	983 (221)	271 (61)
	80	1285 (289)	400 (90)
	90	979 (220)	302 (68)
	100	645 (145)	254 (57)
		Preferred hand	
	50	262 (59)	67 (15)
	60	298 (67)	71 (16)
	70	360 (81)	98 (22)
	80	520 (117)	142 (32)
	90	494 (111)	169 (38)
	100	427 (96)	173 (39)
	Percent of thumb-tip reach *		

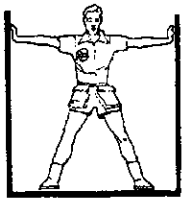

Force-plate (1) height	Distances (2)	Force, N (lbf) Means	Force, N (lbf) SD
100 percent of shoulder height	50	369 (83)	138 (31)
	60	347 (78)	125 (28)
	70	520 (117)	165 (37)
	80	707 (159)	191 (32)
	90	325 (73)	133 (30)
	Percent of span **		

Figure 4.9.3-6 Maximal Static Push Forces

MSIS 205, 1 of 2

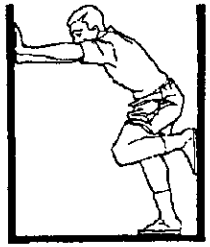

Force-plate (1) height	Distances (2)	Force, N (lbf)	
		Means	SD
50	100	774 (174)	214 (48)
50	120	778 (175)	165 (37)
70	120	818 (184)	138 (31)
Percent of shoulder height		1-g applicable data	

Notes:

(1) Height of the center of the force plate — 200 mm (8 in.) high by 254 mm (10 in.) long — upon which force is applied.

(2) Horizontal distance between the vertical surface of the force plate and the opposing vertical surface (wall or footrest, respectively) against which the subject brace themselves.

* Thumb-tip reach — distance from backrest to tip of subject's thumb as thumb and fingertips are pressed together.

** Span - the maximal distance betwen a person's fingertips as he extends his arms and hands to each side.

(3) 1-g data

Figure 4.9.3-6 Maximal Static Push Forces (continued)

MSIS 205, 2 of 2

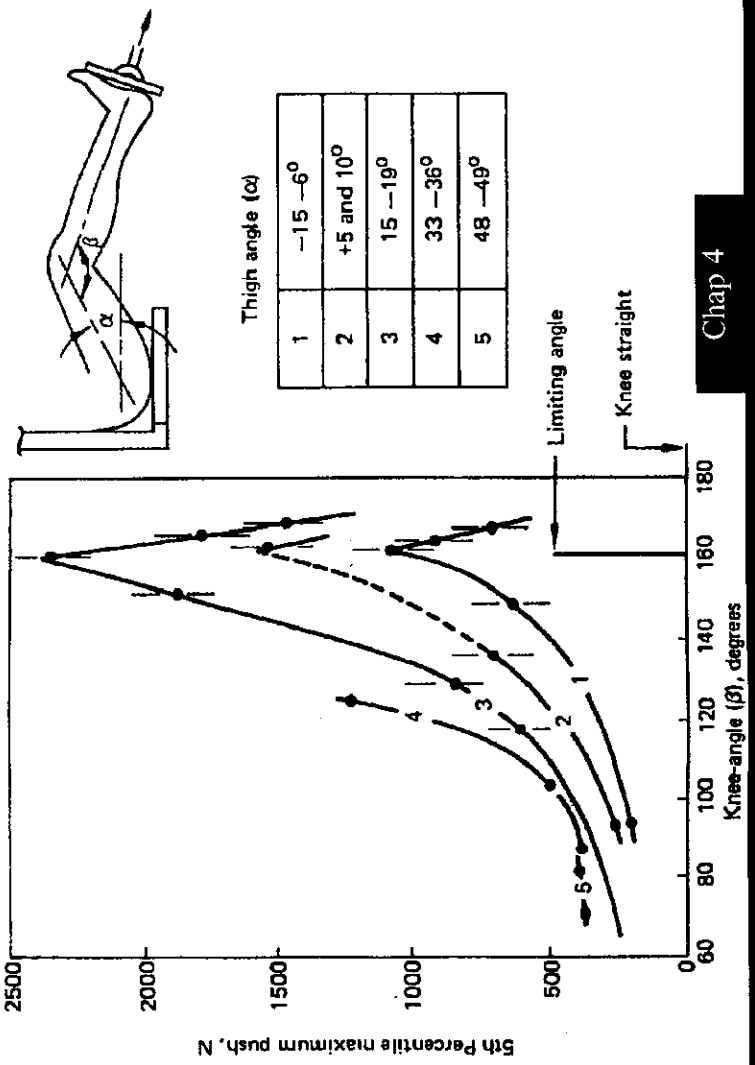

Figure 4.9.3-7 Leg Strength at Various Knee and Thigh Angles (5th Percentile Male Data)

MSIS 206

	Unpressurized suit, bare handed	
	Mean	SD
Maximum torque: Supination, Nm (lb-in.)	13.73 (121.5)	3.41 (30.1)
Maximum torque: Pronation, Nm (lb-in.)	17.39 (153.9)	5.08 (45.0)

Figure 4.9.3-8 Torque Strength

MSIS 207

NOTES

NOTES

5.1.3.1 Long-Term Mission Atmosphere Composition and Pressure Design Requirements

The following design considerations shall apply to the composition and pressure of the space module cabin atmosphere:

a. Internal Environment - An internal environment shall be provided adequate to support and maintain crew comfort, convenience, health, and well being throughout all operational phases in accordance with the requirements given in Figure 5.1.3.1-1.

(Refer to Paragraph 5.8.3.1, Temperature, Humidity, and Ventilation Design Requirements, for other atmosphere related design requirements.)

c. Atmosphere Control and Supply :

   2. The total pressure of the module shall be maintained at the pressure levels defined in Figure 5.1.3.1-1.

   3. The controls shall be provided in each isotable volume of the module and shall be operable by a crewmember in a shirt sleeve environment or by a crewmember wearing a pressure suit or by a remote operator.

   4. Normally, the controls shall operate autonomously with limited or no crew intervention necessary.

d. ECLSS Design Requirements :

   1. The systems of the ECLSS will provide atmospheric pressure and composition control, module temperature and humidity control, atmospheric revitalization, water management, EVA support, and fire and contamination monitoring and control.

   2. The ECLSS shall accommodate whatever phased evolutionary growth is anticipated for the space module.

   3. The ECLSS shall embody regenerative concepts to minimize the use of expendables.

e. Hyperbaric Treatment - Where altitude decompression sickness may occur as a result of operational activity or contingency operation, access to a hyperbaric treatment facility is required.

5.1.3.2 Long Term Mission Atmosphere Monitoring Design Requirements

Atmospheric monitoring instruments shall require as little crew time as possible for operation and maintenance.

5.1.3.3 Long Term Mission Atmosphere Toxicological Monitoring Design Requirements

Design considerations for monitors of volatile organics, airborne particulate matter, and compound-specific monitors are as follows:

a. Monitoring Volatile Organics - The monitoring of volatile organics shall be accomplished.

   1. The overall organic concentration in the atmosphere of all habitable areas shall be monitored. Continuous real time indication of total organic contamination in the air shall be provided.

   2. An additional monitor shall be available. The ability to unequivocally identify and quantify each organic compound and take measurements at regularly scheduled intervals shall be available.

Parameter	Units	Operational	90-day degraded (1)	28-day emergency
CO_2 partial press	mmHg	3.0 max	7.6 max	12 max
Temperature (7)	deg. F	65-80	65-80	60-85
Dew point (2)	deg. F	40-60	35-70	35-70
Ventilation	ft/min	15-40	10-100	10-200
O_2 partial pressure (3)	psia	2.83-3.35	2.4-3.45	2.3-3.45
Total pressure	psia	14.5-14.9	14.5-14.9	14.5-14.9
Diluent gas		N_2	N_2	N_2
Trace contaminants (6)	ppm	TBD	TBD	TBD
Micro-organisms	CFU/m^3 (4)	500 (5)	750 (5)	1000 (5)
Particulates > 0.5 micron	$counts/ft^3$	100,000 max	TBD	TBD

(a) Respirable Atmosphere Requirements (Customary Units)

Figure 5.1.3.1-1 Requirements for Space Module Respirable Atmosphere

MSIS 72, 1 of 2

Parameter	Units	Operational	90-day degraded (1)	28-day emergency
CO_2 partial press	N/m^2	400 max	1013 max	1600 max
Temperature (7)	deg. K	291.5-299.9	288.8-302.6	288.8-305.4
Dew point (2)	deg. K	277.6-288.7	273.9-294.3	273.9-294.3
Ventilation	m/sec	.076-.203	.051-.508	.050-1.016
O2 partial pressure (3)	kP_2	19.5-23.1	16.5-23.8	15.9-23.8
Total pressure	kP_2	100-101.4	100-101.4	100-101.4
Dilute gas	———	N_2	N_2	N_2
Trace contaminants (6)	mg/m^3	TBD	TBD	TBD
Micro-organisms	CFU/m^3 (4)	500 (5)	750 (5)	1000 (5)
Particulates > 0.5 micron	$counts/m^3$	3,530,000 max	TBD	TBD

(b) Respirable Atmosphere Requirements (SI Units)

Notes:

(1) Degraded levels meet "fail operational" criteria.

(2) Reletive humidity shall not exceed 70% in the operational mode or 75% in the degraded mode or 75% in the degraded or emergency moode and shall not be less than 25%

(3) In no case shall the O_2 partial pressure be below 15.9 kP_2 (2.3 psia) or the O_2 concentration exceed 23.8 % of the total pressure at 14.7 psia

(4) CFU- Colony Forming Units

(5) These values reflect a limited base. No widely sanctioned standards are available

(6) Will be based on NHB 8060.1B, (J8400003)

(7) In the operational mode temperature will be selectable to ± 1.1°C (±2°F) throughout the range

Figure 5.1.3.1-1 Requirements for Space Module Respirable Atmosphere

MSIS 72.2 of 2

b. Compound-Specific Monitoring:

1. The capability to monitor specific compounds shall be provided near equipment, chemical operations and processing activities which are potential sources of chemical contamination of the space module.

2. This monitoring capability shall include audible and visible alarms to alert crewmembers when contaminant concentrations exceed maximum acceptable levels.

c. Particulate Size Ranges - Real-time particulate matter monitoring shall be provided for detection of the following size ranges:

1. Respirable particles in the 0.5-10 micron range.

2. Large visible particles.

5.1.3.4 Atmosphere Microbiological-Monitoring & Control Design Considerations

The microbiological monitoring and control design considerations are as follows.

a. Limits - The limits given in Figure 5.1.3.4-1 shall be observed.

b. Air Sampler - Monitoring of the air will be conducted. An air sampler shall monitor air throughout the habitable areas of the facility. It shall be capable of monitoring for the presence of bacteria, yeast and molds.

5.1.3.4.1 Microbial Decontamination Design Requirements

Decontamination is needed when acceptability limits are exceeded or sensory factors indicate microbial contamination has occurred.

5.3.3 Acceleration Design Requirements

(Refer to Figure 5.3.2.4-1 for impact acceleration survival)

5.3.3.1 Linear Acceleration Design Requirements

The following linear acceleration design requirements shall be observed:

a. Linear Acceleration Limits for Unconditioned and Suitably Restrained Crewmembers - The accelerations in any vector shall not exceed those magnitudes and durations specified in Figure 5.3.3.1-1.

b. Linear Acceleration Limits for Preconditioned and Suitably Restrained Crewmembers - Accelerations shall not exceed those magnitudes and durations specified in Figure 5.3.3.1-2.

(Refer to Paragraph 11.7.2.3.3.2, Body Restraint Loads, for seat belt and shoulder harness design loads.)

5.3.3.2 Rotational Acceleration Design Requirements

The following rotational acceleration design requirements for rotation about the pitch axis shall be observed:

a. Rotational Acceleration Limits With Center of Rotation at the Heart - Accelerations shall not exceed the limits specified in Figure 5.3.3.2-1.

b. Rotational Acceleration Limits with a G Field Decaying from 35 to 15 G's - Accelerations shall not exceed the limits specified in Figure 5.3.3.2-2.

Sample source	Monitoring Requirements		Postflight	Acceptability Limit
	Preflight	Inflight		
Air	Prior to closeout	Weekly intervals and within 12 hrs of crew exchange	—	Levels of airborne microorganisms may not exceed 500 CFU per cubic meter

Figure 5.1.3.4-1 Atmosphere Microbiological Limits and Monitoring Requirements

MSIS 73

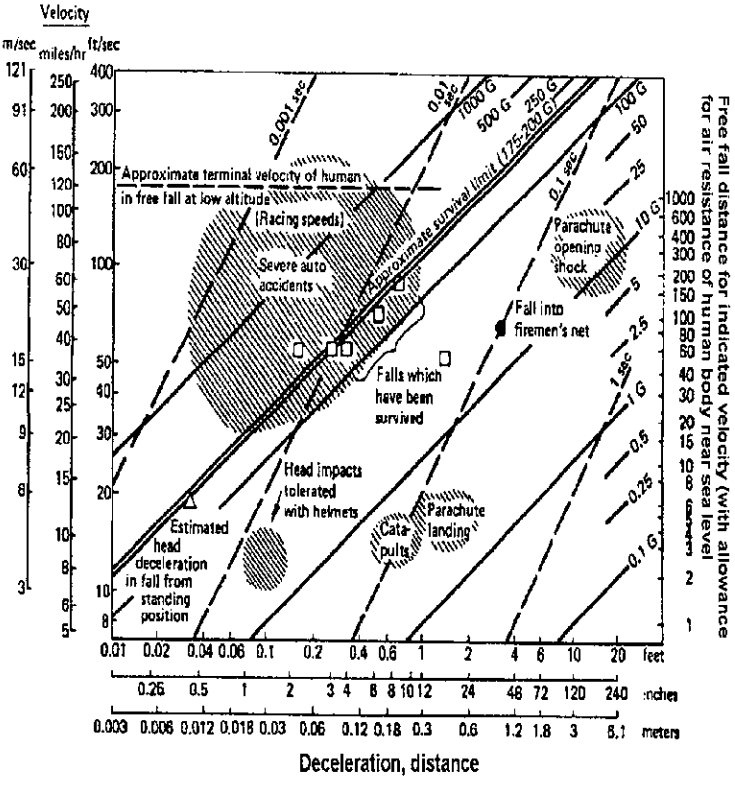

Figure 5.3.2.4-1 Impact Survival Experience

MSIS 49

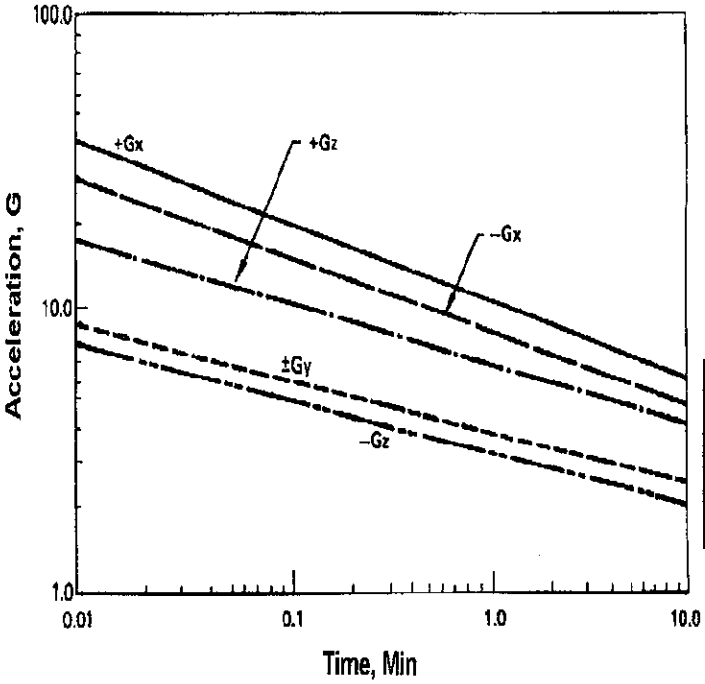

Figure 5.3.3.1-1 Linear Acceleration Limits for Unconditioned and Suitably Restrained Crewmembers

MSIS 50

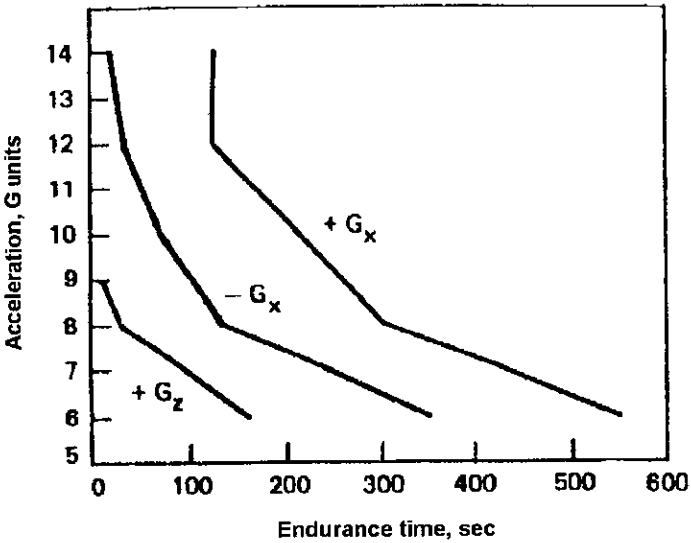

Figure 5.3.3.1-2 Linear Acceleration Limits for Pre-Conditioned and Suitably Restrained Crewmembers

MSIS 51

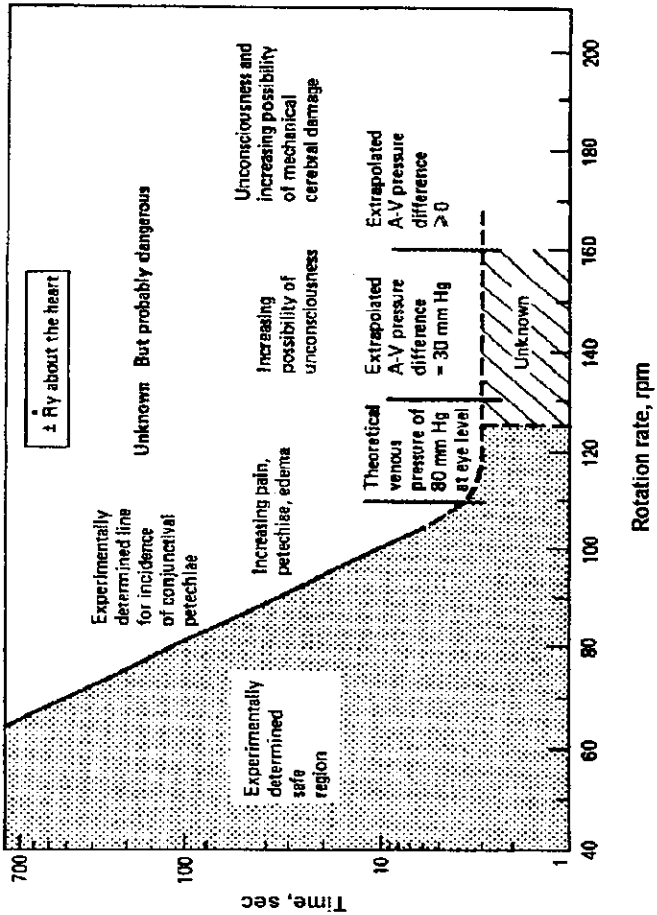

Figure 5.3.3.2-1 Rotational Acceleration Limits for Rotation About the Pitch Axis With No Superimposed Deceleration Field With Center of Rotation at the Heart

MSIS 52

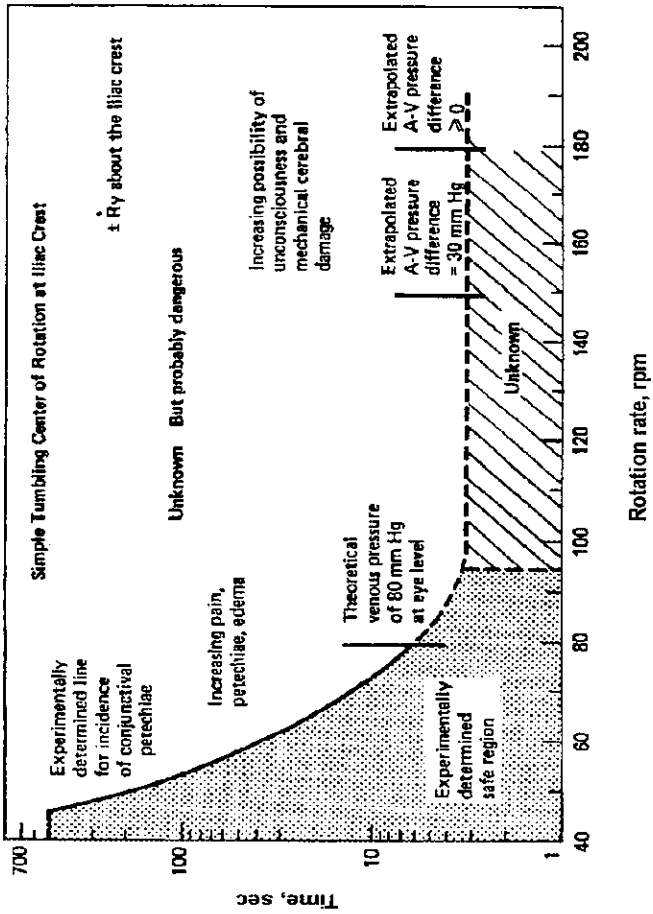

Figure 5.3.3.2-2 Rotational Acceleration Limits for Rotation About the Pitch Axis With No Superimposed Deceleration Field With Center of Rotation at the Iliac Crest

MSIS 53

5.4.3 Acoustics Design Requirements

This section defines the basic environmental limitations and criteria that the designer shall apply to the design of crew stations and other habitable compartment areas.

Noise levels shall be specified in terms of A-weighted sound level, L(A). Noise exposure over 24 hour periods shall be specified in terms of the equivalent A-weighted sound level La eq. The maximum allowable on orbit continuous broad band sound pressure exposure limits produced by the summation of all individual sound pressures from all sources, including all operating systems, subsystems and payloads, considered over a 24 hour period are defined in the following paragraphs.

5.4.3.1 General Acoustic Design Requirements

The following general acoustic design requirements shall be observed:

a. General Acoustic Design - Noise generation and penetration shall be controlled to the extent that acoustic energy will not cause personnel injury, interfere with voice or any other communications, induce fatigue, or contribute to the degradation of overall man-machine effectiveness.

   (All sound pressure levels in decibels are referenced to 20 u-Pascals unless otherwise stated and are to be measured at or translated to the outer ears of crewmembers.)

b. Equipment Noise:

   1. Equipment shall be designed to meet noise requirements of MIL-STD-1474B.

   2. All noisy equipment shall be mounted and located to reduce noise at crewmember stations.

   3. System designs shall include noise control provisions.

   4. Means shall be provided on-board to facilitate measurement of acoustic noise levels to verify that exposure limits are not being exceeded.

5.4.3.2 Noise Exposure Requirements

The following types of noise shall be taken into account:

a. Wide-band random noise (22.4 to 11,200 Hz).

b. Narrow-band noise and tones.

c. Impulse noise.

d. Infrasonic and ultrasonic noise.

There are three sets of noise requirements that shall be satisfied depending on crewmember task and acceleration regimes: 1) hearing conservation, 2) voice communication, and 3) annoyance.

5.4.3.2.1 Hearing Conservation Noise Exposure Requirements

a. Maximum Noise Exposure - A maximum noise exposure of 115 dB(A) is allowable, providing the duration does not exceed two minutes during a 24-hour period.

b. Hearing Protection Devices - Hearing protection devices shall be provided for use during exposure to noise levels of 85 dB(A) or greater.

5.4.3.2.1.1 Wide-Band, Long-Term Hearing Conservation Noise Exposure Requirements

The following long-term, wide-band hearing conservation noise exposure criteria shall apply:

a. Hazard Level - Noise of constant sound levels of 85 dB(A) and greater are considered hazardous regardless of the duration of exposure. Total exposure during a 24-hour period shall not exceed an average of 80dB(A).

b. Allowable Noise Exposure - A noise exposure below 84 dB(A) for up to eight hours duration without hearing protection is allowable but not desirable.

c. Unacceptable Noise Levels - Crewmembers shall not be exposed to continuous noise levels that exceed 120 dB in any octave band or 135 dB OASPL under any circumstances.

5.4.3.2.1.2 Narrow-Band, Long-Term Hearing Conservation Noise Exposure Requirements

The relative sound pressure levels of narrow-band components, pure-tones, and beat frequencies shall be limited to a level at least 10 dB lower than the allowed maximum sound pressure level of the octave-band that contains the component.

5.4.3.2.1.3 Impulse Hearing Conservation Noise Exposure Requirements

Maximum Noise Level (Hearing Conservation Criteria) - Impulse sound is a change in sound pressure level of more than 10 dB in one second or less. Impulse noise shall not exceed 140 dB peak pressure level to meet hearing conservation criteria for unprotected ears.

(See MIL-STD-1474B regarding the relationship between the number of daily exposures, the corresponding peak levels, B-duration values, and the required hearing protection devices when impulse peak pressure levels exceed 140 dB.)

5.4.3.2.1.4 Infrasonic, Long-Term Annoyance Noise Exposure Requirements

The following infrasonic noise annoyance criteria shall apply:

a. Infrasound Sound Pressure Level - Infrasound sound pressure level shall be less than 120 dB in the frequency range of 1 to 16 Hz for 24-hour exposure.

b. Hearing Protection - Passive hearing protection devices shall not be a method for low-frequency infrasound noise control.

5.4.3.2.1.5 Ultrasonic, Long-Term Annoyance Noise Exposure Requirements

The following ultrasonic noise annoyance criteria shall apply:

a. Hearing Conservation Measures - Hearing conservation measures shall be initiated when the ultrasonic criteria provided in Figure 5.4.3.2.1.5-1 are exceeded.

b. Hearing Protection - Ultrasonic noise hearing protection shall be provided where overexposure is possible in contingency cases in a way that communication is not hampered.

5.4.3.2.2 Voice Communication Noise Exposure Requirements

5.4.3.2.2.1 Direct Voice Communications Noise Exposure Requirements

The following noise level criteria shall apply to areas where voice communications are necessary:

One-third octave band center frequency, kHz	One-third octave band level in dB
10	80
12.5	80
16	80
20	105
25	110
31.5	115
40	115

Figure 5.4.3.2.1.5-1 Airborne High Frequency and Ultrasonic Hazard Noise Limits

MSIS 401

a. Voice Communication Criteria - The communication criteria shown in Figure 5.4.3.2.2.1-1 shall be used to define maximum noise level based on voice communication requirements.

b. Background Noise Level - Background noise for work areas shall not exceed the NC-50 contour unless otherwise specified. (Refer to Figure 5.4.3.2.3.1-1).

c. Room reverberation time -

1. The reverberation time of a spacecraft compartment shall be adjusted according to room volume and the criterion for conversational speech as shown in Figure 5.4.3.2.2.1-2.

2. In areas where crewmember display users must communicate by voice, provide a room reverberation time of approximately 0.5 seconds.

3. Reverberation time shall be verified utilizing the natural frequency of the system.

5.4.3.2.2.2 Indirect Voice Communications Noise Exposure Requirements

The following intelligibility criteria for Articulation Index (AI) shall apply:

a. Very Good to Excellent Intelligibility - AI = 0.7 to 1.0.

b. Good Intelligibility - AI = 0.5 to 0.7.

c. Generally Acceptable Intelligibility - AI = 0.3 to 0.5.

d. Unsatisfactory or Only Marginally Satisfactory - AI = 0.0 to 0.3.

Reference Figure 5.4.2.4.2.2-1.

5.4.3.2.3 Annoyance Noise Exposure Requirements

5.4.3.2.3.1 Wide-Band, Long-Term Annoyance Noise Exposure Requirements

The following long-term, wide-band annoyance noise criteria shall apply:

a. Maximum Continuous Noise - The maximum allowable continuous broad band sound pressure levels produced by the summation of all the individual sound pressure levels from all operating systems and subsystems considered at a given time shall not exceed the Noise Criteria (NC) 50 contour for work periods and the NC 40 contour for sleep compartments shown in Figure 5.4.3.2.3.1-1. Also see Figure 5.4.3.2.3.1-2 for correlation of the NCcurves to the A-Weighted sound pressure levels

b. Sleep Compartment Noise Level

1. In sleep areas, the continuous broad-band noise level shall not be less than NC25 contour.

2. Hearing protection devices shall be available in sleep areas to provide aural isolation as needed.

5.4.3.2.3.2 Narrow-Band Annoyance Noise Exposure Requirements

The maximum SPL of any narrow-band continuous component or tone shall be at least 10 dB less than the broad-band SPL of the octave-band which contains the component.

5.4.3.2.3.3 Wide-Band, Short-Term Annoyance Noise Exposure Requirements

The wide-band annoyance noise level as a result of long-term and short-term (less than five minutes) noise shall not exceed an L_{eq} (8-hours) of 32 dB during the sleep period. Intermittent noises shall be minimized.

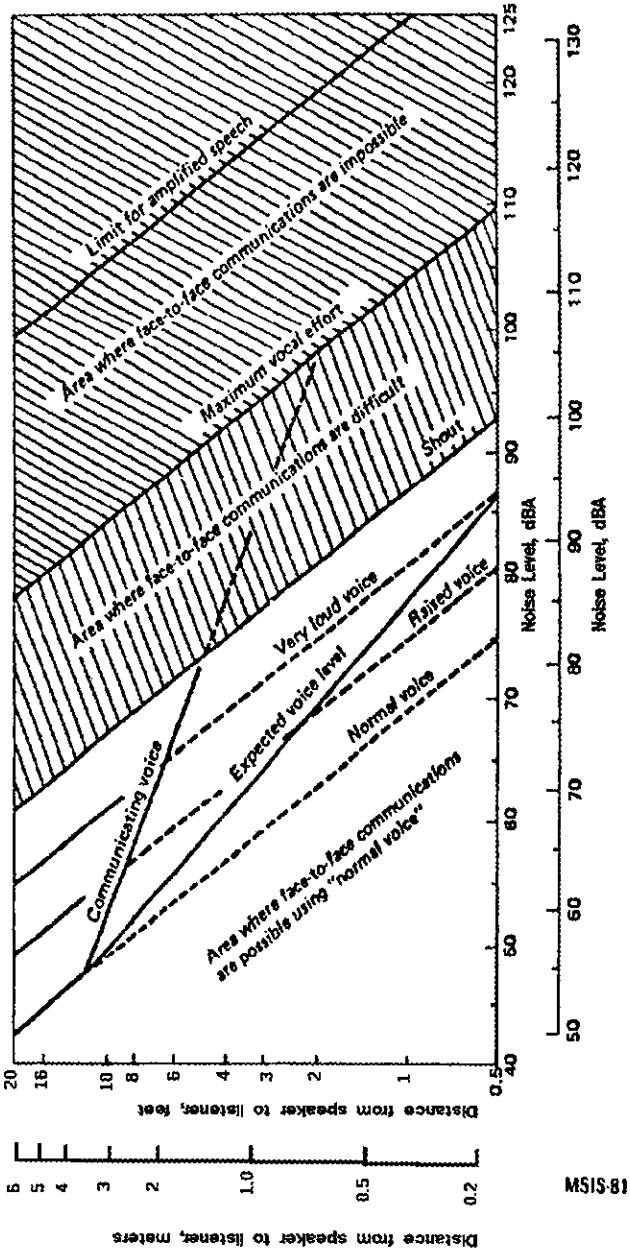

Figure 5.4.3.2.2.1-1. PSIL and Effective Communication Distance

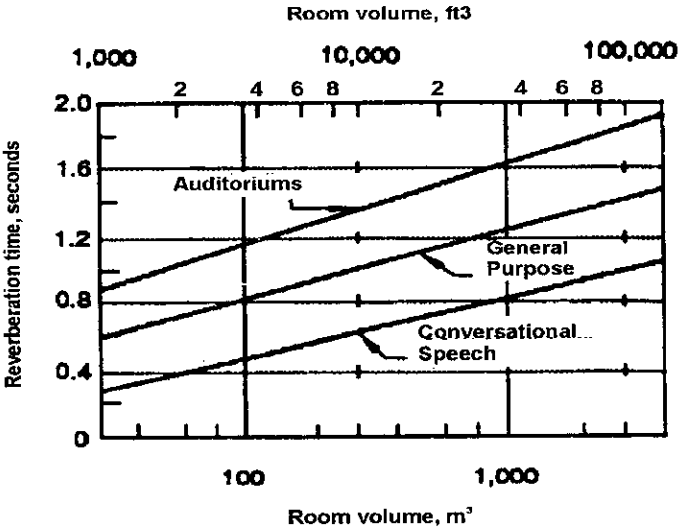

Figure 5.4.3.2.2.1-2 Preferred Reverberation Time

MSIS 82

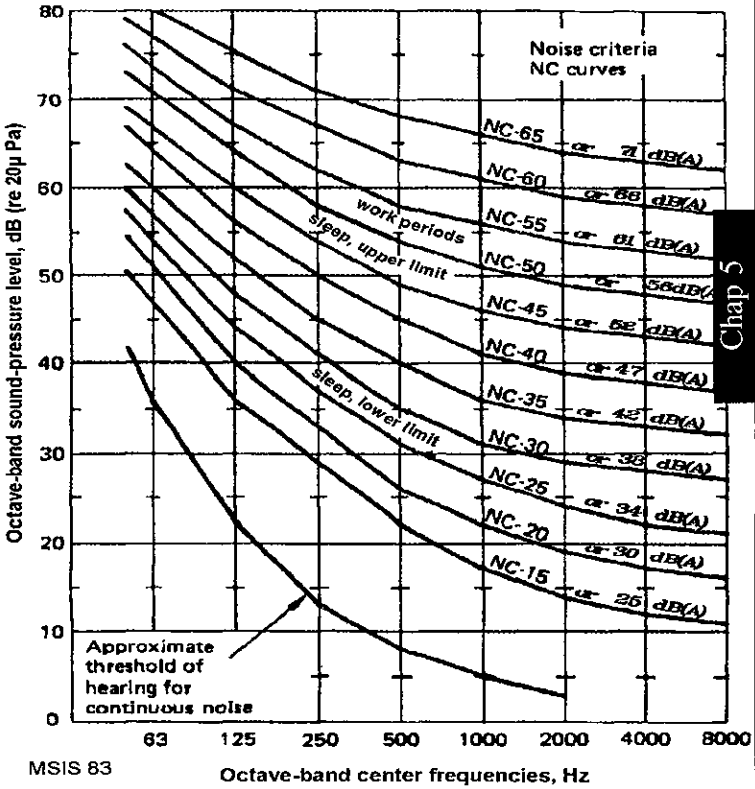

Figure 5.4.3.2.3.1-1 Indoor Noise Criteria (NC) Curves

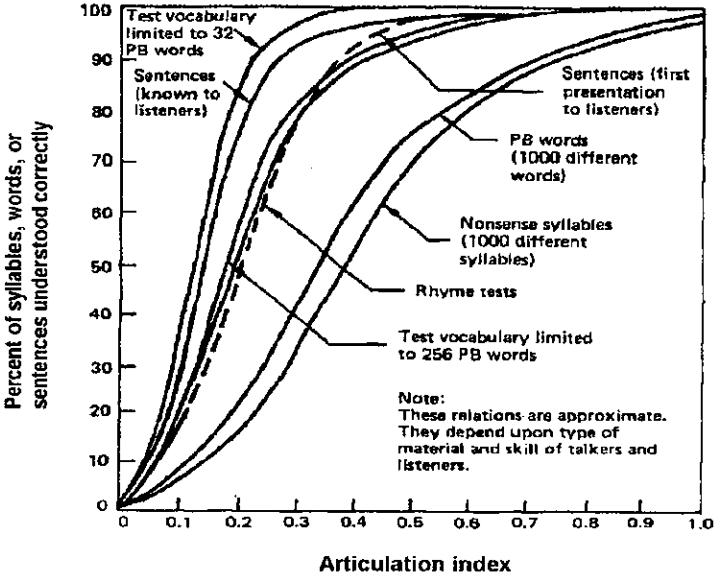

PB=Phonetically Balanced
(see Paragraph 5.4.3.2.2.2 for AI Criteria)

Figure 5.4.2.4.2.2-1 Articulation Index and Speech Intelligibility

MSIS 79

NC Curve	A-Weighted Sound Pressure Level dB(A)
70	78
65	71
60	66
55	61
50	56
45	52
40	47
35	42
30	38
25	34
20	30
15	25

Figure 5.4.3.2.3.1-2 A-Weighted Sound Pressure Level as Weighted to the NC Curve

MSIS 432

5.4.3.2.3.4 Impulse Annoyance Noise Exposure Requirements

The following impulse noise annoyance criteria shall apply:

a. Sleep/Rest Periods - Anticipated impulse or transient noises shall not exceed background noise by more than 10 dB during sleep/rest periods.

b. Masking Noise:

   1. Masking noise generation to cover-up impulse or fluctuating noise is not a preferred solution but, where utilized, it shall not exceed 55 dB(A) at the crewmember's ear.

   2. Masking noise level and spectrum shape shall be under the control of crewmembers.

5.7.2.2.2 Ionizing Radiation Protection Design Requirements

Polar Platform servicing missions will be conducted using the NSTS orbiter so NSTS flight rules will prevail.

The following strategies shall be used to implement radiation protection features for crewmembers on the space module at 28.5 deg:

a. Radiation Protection - The design of the space module shall include the necessary radiation protection features (shielding, radiation monitoring and dosimetry, etc.) for all expected missions to ensure that the crew dose rates are kept as low as reasonably achievable (ALARA levels) and that the maximum allowable dose limits are not exceeded.

b. Use of Onboard Mass - The design and layout of the space module shall make optimal use of onboard mass as radiation shielding.

c. Radiation Contingency Plans - Contingency plans for crew protection during radiation emergencies shall be provided.

d. Mission Radiation Control Program - A mission radiation control program shall be omstituted to establish procedures and responsibilities consistent with the expected mission environment and duration of orbital stay in order to keep radiation exposures to crew at ALARA levels and within the established radiation exposure limits.

e. Radioactive Substances - Safe procedures shall be established for the handling, containment and disposal of radioactive substances or radioactively contaminated materials.

f. Cumulative Crewmember Radiation Dose - The radiation dose equivalent accumulated by each space module crewmember shall be monitored throughout the active career of all crewmembers. Thus, career, as well as mission dose equivalent levels shall be kept ALARA, thereby ensuring that the maximum career dose equivalent limit shall not be exceeded.

5.7.2.2.3 Ionizing Radiation Monitoring and Dosimetry Design Requirements

The following design requirements shall be observed to limit the radiation dose that the crewmembers could acquire during a given mission on the space module:

a. Radiation Monitoring - The accumulated radiation dose within the occupied areas of the space module shall be monitored and recorded for all missions. Radiation dose rates within the spacecraft shall also be monitored and recorded.

b. Crewmember Radiation Dose Monitoring - For each crewmember the radiation dose shall be measured, recorded, the effective dose equivalent calculated and stored as part of the crew's radiation exposure history.

c. Charged Particle Monitoring - Proton and other particle fluxes and their energy spectrum within the space module shall be monitored and recorded. Particle radiation characteristics such as particle direction and secondary particle flux, (i.e., neutrons) shall be monitored.

d. Location of Radiation Detectors - The location and characteristics of the onboard radiation detectors shall be consistent with the expected radiation environment.

e. Radiation Dose Management System - A radiation dose management system shall be provided for keeping track of crew cumulative radiation exposure records, scheduling and assigning crew activities and alerting personnel that are approaching their radiation dose limits.

f. Radiation Event Warning - A radiation detection system shall be provided which continuosly monitors the interior radiation levels, records the accumulated dose, and can be read ouit on command from Mission Control and provides clear notification of radiation conditions within the space module.

5.7.2.2.4 Ionizing Radiation Personnel Protection Design Requirements

The following personnel protective equipment shall be provided, or be available, to assist and protect crewmembers during their mission:

a. EVA Radiation Protection - EVA shall not be scheduled during orbits passing through the South Atlantic Anomaly unless space suits and helmets incorporate radiation shielding.

b. Protective IVA Garmets - Personal shielding devices, which are to be worn if and when the crew encounters high radiation conditions, are being considered for each space module crewmember.

c. Radioactive Contamination Control - Protective garments, equipment and procedures shall be established for dealing with possible radioactive contamination associated with any of the manmade radiation sources onboard.

5.8.3 Thermal Environment Design Requirements

Paragraphs 5.8.3.1 and 5.8.3.2 provide the design requirements for spacecraft cabin thermal environments.

5.8.3.1 Temperature, Humidity, and Ventilation Design Requirements

See Paragraph 5.1.3.1

5.8.3.2 **Thermal Monitoring and Control Design Requirements**

The following requirements shall apply to the monitoring and control of the space cabin thermal environment:

(Refer to Paragraph 9.3, Controls, and Paragraph 9.4, Displays, for specific details on control and display requirements)

a. Monitoring of Thermal Environment -

1. Monitoring of cabin temperature and relative humidity shall be provided.

2. Monitoring of the thermal environment shall be fully automatic. The number, type, and location of temperature sensors and the frequency of monitoring shall be such as to ensure measurement of representative cabin temperature and to allow stable control of those temperatures.

3. Visual and audible alarms shall be automatically initiated when thermal parameters exceed the limits given in Paragraph 5.8.3.1.

(Refer to Paragraph 9.4.4, Caution and Warning Displays, for specific requirements for implementing the caution and warning system.)

b. Adjustment of Thermal Environment by the Crew - Crewmembers shall be provided with controls that allow them to modify temperatures, humidity, and ventilation rates inside the space module within the ranges for these parameters as specified in Paragraph 5.8.3.1.

c. Sleep Compartment, Personal Hygiene Area, and Waste Management Compartment Thermal Environment Controls - Temperature and ventilation shall be maintained in each of the private crew quarters, the personal hygiene area, and the waste management compartment, and shall be controlled in each of these areas within the range of these parameters.

d. Portable Fans - If activity stations are isolated from the module air circulation systems, auxiliary airflow and/or portable fans shall be provided.

e. Exercise Station Perspiration Control - Each exercise station shall be provided with a method of sweat removal and collection.

NOTES

NOTES

6.2 GENERAL SAFETY

6.2.2. General Safety Design Considerations

6.2.3 General Safety Design Requirements

6.3.3 Mechanical Hazards Design Requirements

Design requirements for the elimination of burrs, corners, edges, protrusions, pinching, snagging, and cutting for IVA are given in this section:

(Refer to Paragraph 14.1.3, EVA Safety Requirements, for comparable EVA requirements.)

6.3.3.1 Corner and Edge Requirements

a. Exposed edges 6.4 mm (0.25 in.) thick or greater shall be rounded to a minimum radius of 3.0 mm (0.12 in.) as shown in Figure 6.3.3.1-1.

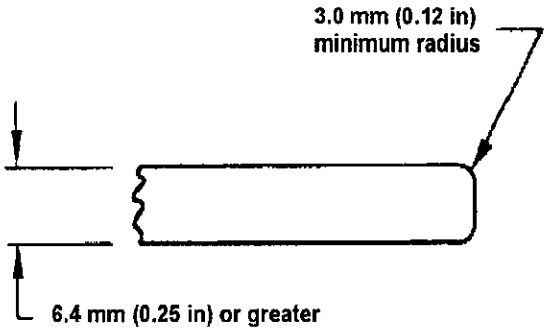

Figure 6.3.3.1-1 Requirements for Rounding Exposed Edges 6.4 mm (0.25 in) Thick or Thicker

MSIS 4

b. Exposed edges 3.0 to 6.4 mm (0.12 to 0.25 in.) thick shall be rounded to a minimum radius of 1.5 mm (0.06 in.) as shown in Figure 6.3.3.1-2.

c. Exposed edges 0.6 to 3.0 mm (0.02 to 0.12 in.) thick shall be rounded to a full radius as shown in Figure 6.3.3.1-3.

d. The edges of thin sheets less than 0.5 mm (0.02 in.) thick shall be rolled or curled as shown in Figure 6.3.3.1-4.

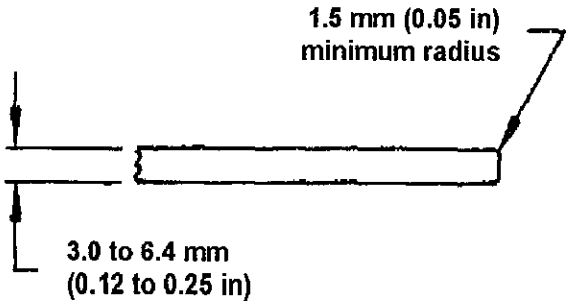

Figure 6.3.3.1-2 Requirements for Rounding Exposed Edges 3.0 to 6.4 mm (0.12 to 0.25 in) Thick

MSIS 5

Figure 6.3.3.1-3 Requirements for Rounding Exposed Edges 0.5 to 3.0 mm (0.02 to 0.12 in) Thick

MSIS 6

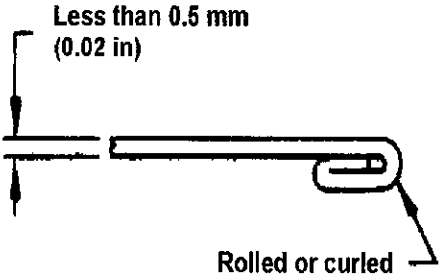

Figure 6.3.3.1-4 Requirements for Curling of Sheets Less Than 0.5 mm (0.02 in) Thick

MSIS 7

6.3.3.2 Exposed Corner Requirements

a. Exposed corners of materials less than 25 mm (1.0 in.) thick shall be rounded to a minimum radius of 13 mm (0.5 in.), as shown in Figure 6.3.3.2-1.

b. Exposed corners of materials which exceed 25 mm (1.0 in.) thickness shall be rounded to 13 mm (0.5 in.) spherical radius, as shown in Figure 6.3.3.2-2.

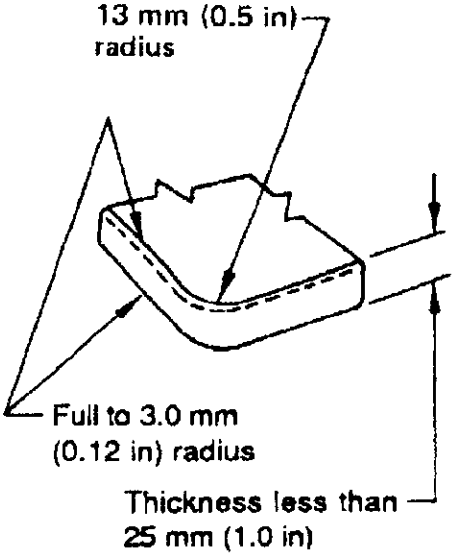

Figure 6.3.3.2-1 Requirements for Rounding of Corners Less Than 25 mm (1.0 in) Thick

MSIS 8

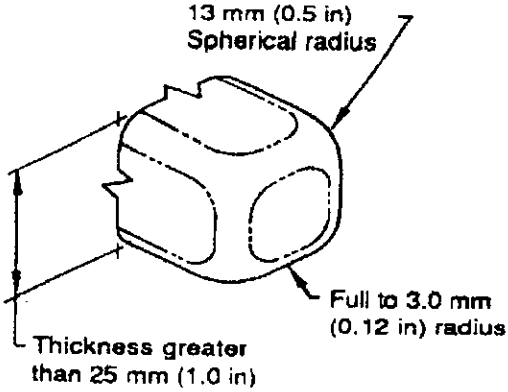

Figure 6.3.3.2-2 Requirements for Rounding of Corners Greater Than 25 mm (1.0 in) Thick

MSIS 9

6.3.3.3 Protective Covers on Exposed Protrusions Requirements

Protective covers, cases, or padding shall be used on protrusions or other hazardous objects that cannot be made completely hazard free.

6.3.3.4 Holes Requirements

Holes that are uncovered and are round or slotted in the range of 10.0 to 25.0 mm (0.4 to 1.0 in) shall be avoided.

6.3.3.5 Latches Requirements

Latches or similar devices that can pinch fingers shall not be used. A protective guard or cover shall be used where suitable substitutes cannot be found.

6.3.3.6 Screws and Bolts Requirements

Screws or bolts with more than two exposed threads shall be capped to protect against the sharp threads.

6.3.3.7 Securing Pins Requirements

Securing pins in handrails shall be designed to prevent their inadvertently backing out above the handhold surface.

6.3.3.8 Levers, Cranks, Hooks, and Controls Requirements

Levers, cranks, hooks, and controls shall not be located where they can pinch, snag, or cut the crewmember or clothing.

6.3.3.9 Burrs Requirements

Exposed surfaces that can be grasped by the bare hand shall be free of burrs.

6.3.3.10 Mechanically Stored Energy Requirements

Mechanical devices capable of storing energy (such as springs, levers, and torsion bars) shall be avoided in spacecraft design. Bungee cords are acceptable.

a. Safety Features - Where stored energy devices are necessary, safety features such as removal tabs, locks, protective devices, and warning placards shall be provided.

b. Stored Energy Release - Spring-loaded devices (i.e., bungee restraints) shall provide means for releasing stored energy forces.

c. Backlash - Stored energy devices shall not generate a backlash.

6.4.3 Electrical Hazards Design Requirements

Equipment design shall protect the crewmembers from electrical hazards. See Figure 6.4.3-1 for general information regarding electrical voltage, current, and frequency exposure criteria and the range of physiological effects thereof.

6.4.3.1 Chassis Leak Current Requirements

Crewmembers shall not be exposed to excessive levels of leak current from contact with the exterior of electrically powered equipment. The maximum chassis leak current shall not exceed 100 microamperes rms for frequencies from dc to 1000 Hz. For frequencies above 1000 Hz, the limit is increased in accordance with Figure 6.4.3.1-1. Electrical equipment shall meet this maximum current limitation for any combination of the following conditions:

1. Electrical supply polarity normal and reversed.

2. Power switch on and off.

3. Ground open and intact.

6.4.3.2 Crewmember Applied Current Requirements

Crewmembers shall not be exposed to excessive levels of current from electrically powered equipment attached to the crewmember's body. The maximum applied current shall not exceed 50 microamperes rms for frequencies from DC to 1000 Hz for external skin surface or invasive (readily accessible mucous membranes and breached skin) crewmember connections. For frequencies above 1000 Hz, the limit is increased in accordance with Figure 6.4.3.1-1. Electrical equipment shall meet this maximum current limitation for any combination of the following conditions:

1. Electrical supply polarity normal and reversed.

2. Power switch on and off.

3. Ground open and intact.

6.4.3.3 Crewmember Protection Requirements

Crewmembers shall be protected from electrical hazards by one or more of the following methods:

6.4.3.3.1 Grounding Requirements

External metal parts subject to crew contact shall be at ground potential.

6.4.3.3.2 Protective Cover Requirements

Equipment shall provide grounded or nonconductive protective covers for all electrical hardware.

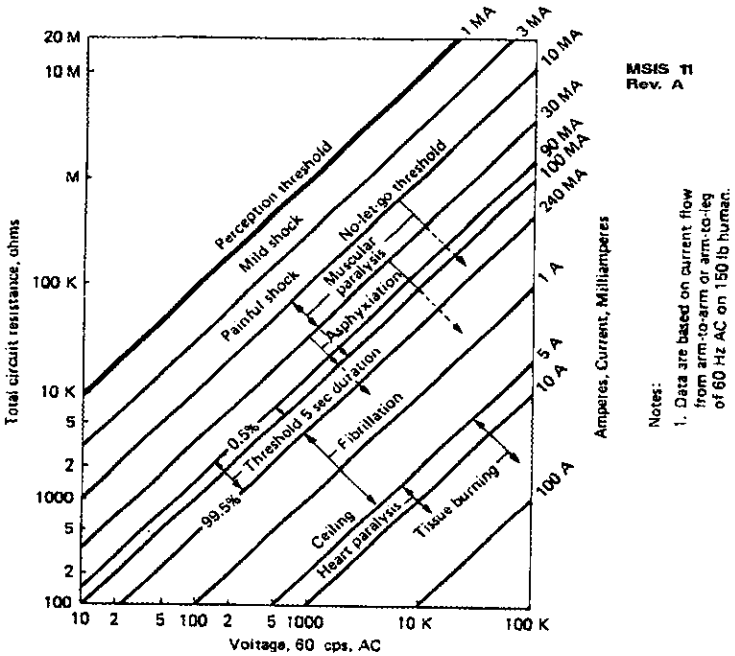

Figure 6.4.3-1 Voltage/Current/Frequency Exposure Criteria and Range of Physiological Effects

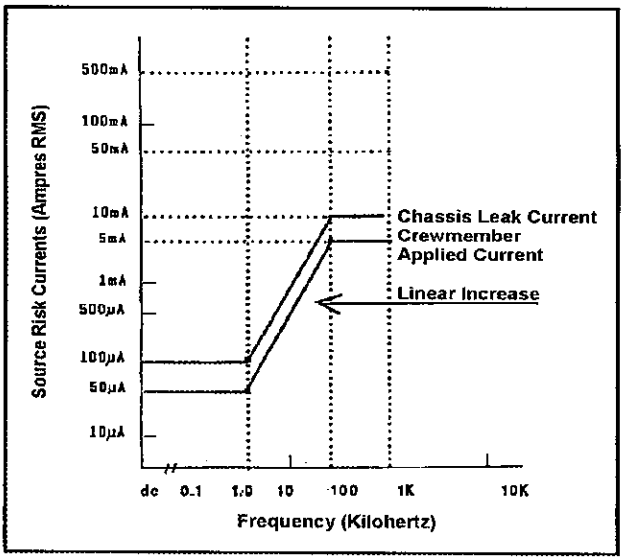

Figure 6.4.3.1-1 Current Limits Versus Frequency

MSIS 402

6.4.3.3.3 Interlocks Requirements

Equipment access doors or covers shall incorporate interlocks to remove all potentials in excess of 150 V when open.

6.4.3.3.4 Warning Labels Requirements

Warning labels shall be provided where potentials are hazardous to crewmembers.

6.4.3.3.5 Warning Labels Plus Recessed Connectors Requirements

Provide warning labels and recessed connectors or other protective measures where potentials exceed 150 V.

6.4.3.3.6 Plugs and Receptacles Requirements

a. Plugs and receptacles design shall prevent a plug of one voltage rating from being inserted into a receptacle of another rating.

b. All hot contacts shall be female receptacles.

c. Provide means to ensure proper pin connections of all critical electrical connectors prior to the application of system power.

d. Provide means to ensure that all pin connections exist as designed, no pin-to-pin shorts exist, and that no pin-to-shell shorts exist.

e. Unless connectors are specifically designed and approved for mating or demating in the existing environment under the loads being carried, they shall not be mated or demated until voltages have been removed from the powered side(s) of the connector.

6.4.3.3.7 Insulation Requirements

a. All exposed electrical conductors shall be insulated.

b. All power tools to be used near high voltages shall have insulated handles.

6.4.3.3.8 Power Cords Requirements

Portable equipment shall be designed with three-wire power cords with one wire at ground potential. A system of double insulation or its equivalent when approved by the procuring agency, may be used without a ground wire.

6.4.3.3.9 Moisture Protection Requirements

Equipment shall be designed so that moisture cannot collect near electrically operated controls.

6.4.3.3.10 Static Discharge Protection Requirements

Equipment design shall ensure that crewmembers are protected from static charge buildup.

6.4.3.3.11 Spacing Between Connectors Requirements

Equipment shall be designed so that a connector installation/removal tool will not make contact between the adjacent connectors.

6.4.3.3.12. Bio-Instrumentation System Shock Protection Requirements

All bio-instrumentation system design shall provide sufficient resistance in series with each body electrode to limit to safe levels electrical shock currents that could flow through an instrumented crewmember as a result of contact with available voltage sources.

6.5.3 Touch Temperature Design Requirements

Surface touch temperature design requirements for minimizing crewmember discomfort and injury are as follows:

a. The deisgn goal for the maximum surface temperatures which can come into contact with bare skin shall be 40°C (104°F).

b. The maximum allowable surface temperature for continuous contact with bare skin shall be 45°C (113°F).

c. Incidential or momentary bare skin contact with surface temperatures from 46° - 49°C (114° - 120°F) is permissible. Warning labels shall be provided to alert crewmembers to these excessive temperature levels. Guards or insulation shall be provided to prevent crewmember contact with surface temperatures in excess of 49°C (120°F). Where contact with surfaces above this limit is required, adequate warning labels and protective equipment are required.

d. For surfaces that must be touched wtih bare skin, the minimum temperature shall not be below 4°C (39°F). Where contact with surfaces below this limit is required, adequate warning labels and protective equipment are required.

(Refer to Paragraph 14.2.3.11, EVA Touch Temperature and Pressure Design Requirements, for EVA-unique touch temperature requirements.)

6.6.3 Fire Protection and Control Design Requirements

Fire protection and control design requirements are given below.

6.6.3.1 General Requirements

6.6.3.1.1 Fire Protection System

A fire protection system comprising detection, warning, and extinguishing devices shall be provided during all mission phases.

6.6.3.1.2 Material Selection

Only approved fire-retardant materials shall be used.

6.6.3.2 Detection Requirements

6.6.3.2.1 Detection System Signals

The fire detection system shall provide signals to the vehicle warning system.

6.6.3.2.2 Reset and Self-test

The fire detection system shall have reset and self-test capabilities.

6.6.3.2.3 Sensor Replacement

All sensors shall be replaceable and accessible.

6.6.3.3 Warning System Requirements

Warning - General requirements for the fire warning system are as follows:

(Refer to Paragraph 9.4, Caution and Warnings, for complete description of design considerations and requirements.)

a. The caution and warning system shall include a fire warning system to alert the crew in case of a fire.

b. The fire warning system shall be capable of operating independently.

c. Warnings shall be both visual and auditory to provide maximum information to the crew for timely action.

d. The visual fire warning display shall be aviation red in accordance with MIL-STD-25050.

6.6.3.4 Extinguishing Requirements

b. Design of the vehicle and its components shall provide for rapid access with fire fighting equipment.

c. Chemical agents used for fire extinguishing shall be compatible with the toxicity requirements of the spacecraft.

d. Portable fire extinguishers shall be provided for open areas and a fixed fire extinguishing system shall be provided for enclosed inaccessible areas.

e. Capability for removal of expended fire extinguishing material during post-fire cleanup shall be provided.

f. Automatic extinguishing systems shall incorporate a disabling feature to prevent inadvertent activation during servicing.

NOTES

NOTES

7.2.2.3 Nutrition Design Requirements

7.2.2.3.1 Food Design Requirements

7.2.2.3.2 Potable Water Design Requirements

7.2.2.3.2.1 Potable Water Quality Design Requirements

Potable water shall meet the quality requirements defined in Figure 7.2.2.3.2.1-1. Provisions shall be made to prevent accidental use of nonpotable water for drinking or food preparation.

Parameter		MCL
Physical		
Total solids (Suspended/Dissolved) mg/l		100
Color True	Pt/Co	15
Taste and Odor	TTN/TON	3
pH		6.0-8.0
Particulates (maximum size - μ)		40
Turbidity	NTU	1
Dissolved Gas	(Free @ 35°F)	None
Free Gas	(@ STP)	None
Inorganic Constituents (mg/l)		
Ammonia		0.5
Arsenic		0.01
Barium		1.0
Cadmium		0.01
Calcium		30
Chloride		250
Chromium		0.05
Copper		1.0
Iodine (Total)		15
Iron		0.3
Lead		0.05
Manganese		0.05
Magnesium		50
Mercury		0.002
Nickel		0.05
Nitrate	(NO_3-N)	10
Potassium		340
Selenium		0.01
Silver		0.05
Sulfate		250

Figure 7.2.2.3.2.1-1 Maximum Contaminant Levels (MCL) for Potable Water

MSIS 186
1 of 2

Chap 7

Parameter	MCL
Inorganic Constituents (mg/l)-Concluded	
Sulfide	0.05
Zinc	5.0
Bactericides (mg/l)	
Residual Iodine (Minimum)	0.5
Residual Iodine (Maximum)	4.0
Aesthetics (mg/)	
Cations	30
Anions	30
CO_2	15
Microbial	
Bacteria (CFU/100 ml)	
Total Count	1
Anaerobes	1
Aerobes	1
Gram Positive	1
Gram Negative	1
E. coli	1
Enteric	1
Viruses (PFU/100ml)	1
Yeasts and Molds (CFU/100ml)	1
Radioactive Constituents (pCi/l)	See Note
Organics (µ/l)	
Total Acids	500
Cyanide	200
Halogenated Hydrocarbons	10
Phenols	1
Total Organic Carbon (TOC)	500
TOC (Less Non-Toxicants)	100
Total Alcohols	500
Organic Constituents (mg/l)	
Specific Toxicants	TBD

Note:
The maximum levels for radioactive material in potable water shall conform to Nuclear Regulatory Commission (NRC) (10CRF20, et. al.) to control the dose to the public from the extant 1200+ man-made radionuclides. These maximum contaminant levels are listed in the Federal Register, Vol. 51, No. 6, 1986, Appendix B, as Table 2 (Reference Level Concentrations), Column 2 (Water).

Figure 7.2.2.3.2.1-1 Continued

MSIS 186
2 of 2

7.2.2.3.2.2 Potable Water Quantity Design Requirements

The supply of available water for drinking and rehydration of food is listed below:

a. Operational Mode - 2.84 to 5.16 Kg per person-day (6.26 to 11.35 lbs per person-day)

b. Degraded and Emergency Mode - 2.84 Kg per person-day (6.26 lbs per person-day)

7.2.2.3.2.3 Potable Water Temperature Design Requirements

Drinking Water requirements shall meet the following requirements:

a. Cold Water - Cold water temperature shall be 4 +/- 3°C (40 +/- 5°F).

b. Ambient Water - Ambient water temperature shall be 21 +/- 5°C (70 +/- 10°F).

c. Hot Water - Means shall be provided for heating water up to 65.6°C (150°F).

7.2.3.3.3 Exercise Countermeasure Design Requirements

Exercise countermeasure requirements apply to space missions that expose crewmembers to microgravity conditions for longer than 10 days. For missions of 10 days or less, exercise countermeasures shall be available for crewmembers as necessary to maintain performance during the mission on entry to 1-G. The following are the exercise countermeasure design requirements:

a. Types of Exercise - The space module shall provide facilities for the following types of exercise:

   1. Equipment for placing tension stress, isotonic and isometric, upon the major muscle groups of the body shall be provided in order to counter "disuse atrophy" caused by microgravity.

   2. Devices for exercising the cardiorespiratory system by engaging large skeletal muscle masses (i.e., aerobic exercises) as partial countermeasure to cardiovascular deconditioning shall be provided.

b. Duration of Exercise - Facilities and scheduling shall provide the capability for all crewmembers to exercise not less than 1 hour per day.

c. Exercise Regimens - Capability shall be provided for establishing and updating individualized exercise routines and goals for each crewmember.

d. Motivation and Training - Appropriate motivational devices and/or incentives shall be provided. Crewmembers shall be trained in the importance of exercise and how to use the equipment.

e. Data Monitoring of Exercise - There shall be the capability to monitor physiological parameters during exercise, store the data, and downlink this information to Earth. The following physiological parameters shall be monitored:

   1. Routine Monitoring.

      (a) Heart Rate.

      (b) Duration of Exercise Period

      (c) Power Output From Instrumented Exercise Device

2. Periodic Monitoring

   (a) Electrocardiogram

   (b) Blood Pressure

   (c) Maximal and Submaximal Oxygen Uptake

   (d) Muscle Strength

7.2.3.4.3 Nonexercise Countermeasures Design Requirements

7.2.4.3 Sleep Design Requirements

The following are design requirements for crew sleep:

a. Facilities - Adequate sleep facilities shall be provided.

   (Refer to Paragraph 10.4.3, Crew Quarters, for sleep facility design requirements.)

b. Duration - Scheduling should allow a minimum sleep period of 8 hours per day with minimum of 6 hours of uninterrupted sleep.

c. Pharmaceuticals - Appropriate sleep aid medication shall be made available to crewmembers via a controlled access system.

7.2.5.3 Personal Hygiene Design Requirements

7.2.5.3.1 Body Grooming Design Requirements

The following body grooming measures shall be provided in the space modules.

a. Skin Care - The capability shall be provided for crewmembers to condition their skin sufficiently to prevent drying and/or cracking.

b. Shaving - Provisions shall be made for crewmembers to shave body hair.

c. Hair Grooming - Provisions shall be made for crewmembers to cut hair to maintain the length within mission and/or personal requirements.

d. Nail Care - Provisions shall be made for crew members to trim nails.

e. Body Deodorant - The capability shall be provided for crewmembers to control body odor.

f. Menstruation - Provisions shall be provided for the collection and disposal of menstrual discharge.

   (Refer to Paragraph 10.2.3.4, Hair Cutting Design Requirements, and Paragraph 10.2.3.5, Grooming & Shaving Design Requirements, for facility design requirements.)

7.2.5.3.2 Partial Body Cleansing Design Requirements

The capability shall be provided for crewmembers to perform selected body area cleansing as needed.

(Refer to Paragraph 10.2.3.1, Partial Body Cleansing Design Requirements, for facility design requirements.)

7.2.5.3.3 Oral Hygiene Design Requirements

The capability shall be provided for crewmembers to maintain proper oral hygiene. *Proper oral hygiene includes tooth, mouth, and gum care.*

Water for oral hygiene shall meet potable water quality standards defined in Paragraph 7.2.2.3.2.1.

(Refer to Paragraph 10.2.3.3, Oral Hygiene Design Requirements, for facility design requirements.)

7.2.5.3.4 Whole Body Cleansing Design Requirements

The capability shall be provided for crewmembers to perform whole body skin and hair cleansing.

(Refer to Paragraph 10.2.3.2, Whole Body Cleansing Design Requirements, for facility design requirements.)

7.2.5.3.5 Personal Clothing & Equipment Cleansing Design Requirements

The capability shall be provided to supply each crewmember with clean clothing and other washable items, including bedding and linens, over the duration of the mission.

(Refer to Paragraph 11.13.1.3, Clothing Design Requirements, and Paragraph 10.10.3, Laundry Facility - Design Requirements, for additional requirements.)

7.2.5.3.6 Personal Hygiene Water Design Requirements

Personal hygiene water is water that is used for external body cleansing. Personal hygiene water requirements are listed below:

a. Quality - Minimum personal hygiene water quality requirements are given in Figure 7.2.5.3.6-1.

b. Quantity - Personal hygiene water quantity requirements are given in Figure 7.2.5.3.6-2. This figure does not include requirements for laundry and dishwashing which are system dependent.

c. Temperature - Temperature shall be adjustable from 21°C(70°F) to 45°C(113°F).

MODE			
UNITS	Operational	90 dAY Degraded [1]	Emergency [3]
lb/ person-day	51.5[2]	16.0[4]	12 0[5]
kg/ person-day	23.4	8.18	5.45

Notes:

(1) Degrade levels meet "fail operational criteria."
(2) Based on 12 lb minimum capacity for hygiene and 25 lb used in a 90 day chamber test. Includes laundry (27.5 lb/person-day) and dishwashing (12 lb/person-day) quantities.
(3) Safe Haven conditions shall be maintained for up to 45 days.
(4) Based on 12 lb/person-day capacity for hygiene and 4 lb/person-day for laundry.
(5) Based on 12 lb/person-day minimum capacity for hygiene only.

Figure 7.2.5.3.6-2 Minimum Presonal Hygiene Quantity Requirements

MSIS 400

Property		Limit
Total solids (suspended/dissolved) mg/ℓ		500
Color, true	Pt/Co	15
Taste and odor	TTN/TON	<3
pH		5.0-8.0
Particulate (maximum size)		40 μ
Turbidity	NTU	1
Dissolved gas	Free @ 35°C	None
Free gas	STP	None
Ionic (inorganic) (mg/ℓ)		
Ammonia		0.5
Arsenic		0.01
Barium		1.0
Cadmium		0.01
Calcium		100
Chloride		250
Chromium		0.05
Copper		1.0
Fluoride		1.0
Iodide		15
Iron		0.3
Lead		0.05
Manganese		0.05
Magnesium		0.05
Mercury		0.002
Nickel		0.05
Nitrate (NO_3-N)		10
Potassium		340
Selenium		0.01
Silver		0.05
Sulfide		0.05
Sulfate		250
Zinc		5.0

Figure 7.2.5.3.6-1 Maximum Contaminant Levels (MCL) for Personal Hygiene Water

MSIS 190
1 of 2

Parameter	MCL
Organics (ug/l)	
Total Organic Carbon (TOC)	10,000
TOC (Less Non-Toxicants)	1,000
Cyanide	TBD
Phenols	1
Acids	TBD
Specific Toxicants	TBD
Halogenated Hydrocarbons	TBD
Alcohols	TBD
Microorganisms	
Bacteria CFU/100ml	
Total Count	1
Anaerobes	1
Aerobes	1
Gram Positive	1
Gram Negative	1
E. coli	1
Enteric	1
Viruses (PFU/100ml)	1
Yeasts and Molds (CFU/100ml)	1
Bactericide (mg/l)	
Residual (Halogens) (Minimum)	0.5
Residual (Halogens) (Maximum)	6.0
Radiological (pCi/l)	See Note

Note:
The maximum contaminant levels for radioactive material in potable and personal hygiene water shall conform to Nuclear Regulatory Commission (NRC) regulations (10CFR20, et. al.) for control of dose to the public from the extant 1200+ man-made radionuclides. These maximum contaminant levels are listed in the Federal Register Vol. 51, No. 6, 1986, Appendix B, a Table 2 (Refereance Level Concentrations) Column 2 (Water).

Figure 7.2.5.3.6-1 Concluded

MSIS 190
2 of 2

7.2.6.3 Pre/Post-Mission Health Management Design Requirements

7.2.7.3 Routine Health Monitoring Design Requirements

7.2.7.3.1 Routine Crew Health Monitoring Design Requirements

7.2.7.3.2 Water Supply Monitoring Design Requirements

7.2.7.3.2.1 Water Quality Monitoring Schedule Design Requirements

Water quality shall be monitored according to the schedule shown in Figure 7.2.7.3.2.1-1.

7.2.7.3.2.2 Toxicological Monitoring Design Requirements

7.2.7.3.2.3 Microbiological Monitoring & Treatment Design Requirements

The following requirements apply to monitoring and treatment of microbiological qualities of water:

a. Determination of Potability

b. Sampling Technique

c. Iodine

d. Alternative Biocide

Parameter	Process control monitoring (on-line)	Batch control monitoring (x/or to use)	Periodic[1] monitoring
Conductivity	x	x	↕
ph	x	x	↕
Turbidity	↕	x	↕
Color	↕	x	↕
Temperature	x	x	↕
Physical properties	↕	↕	←
Ammonia	x	x	↕
Iodine	x	x	↕
Selected specific ions	↕	x	↕
Inorganic constituents	↕	←	←
TOC	x	x	←
Selected organic constituents	↕	x	←
Total bacteria	↕	x	↕
Yeast and molds	↕	↕	x
Bacterial ID	↕	↕	x
Virus	↕	↕	↕
Radionuclides	↕	x	←
Dissolved gas	↕	x	↕
Free gas	x	x	↕

MSIS-339

Notes:
↕ Monitoring requirements and schedule are dependent on water use and recycling process
X Monitoring is required.
— Monitoring is not required.

Figure 7.2.7.3.2.1-1 Required Water Quality Monitoring Schedule for All Water Which Comes Into Contact With Personnel

e. Administration of Iodine

f. Monitoring

g. Treatment Bed Control

7.2.7.3.2.4 Physical Monitoring Design Requirements

7.2.7.3.3 Environmental Monitoring Design Requirements

Environmental monitoring necessary to maintain crew health shall be provided as follows:

a. Particulate Monitoring

b. Microbial Contaminants Monitoring

c. Chemical Contaminants Monitoring

d. Radiation Monitoring

e. Atmospheric Monitoring

f. Radiological Monitoring

7.3 MEDICAL CARE

7.3.3 Medical Care Design Requirements

7.3.3.1 General Design Requirements

7.3.3.2 Prevention Design Requirements

7.3.3.3 Diagnosis Design Requirements

7.3.3.4 Treatment (Therapeutics) Design Requirements

NOTES

NOTES

8.2 OVERALL ARCHITECTURAL CONSIDERATIONS AND REQUIREMENTS

8.2.3 Overall Architectural Design Requirements

8.2.3.1 Crew Station Arrangement and Grouping Design Requirements

8.2.3.2 Dedicated vs. Multipurpose Space Utilization Design Requirement

8.2.3.3 Crew Station Location

8.2.3.4 Microgravity

8.2.3.5 Reconfiguration

8.2.3.6 Decor and Lighting

8.3.3 Crew Station Adjacencies Design Requirements

8.3.3.1 Adjacent Crew Station Design Requirements

8.3.3.2 Non-Adjacent Crew Stations - Design Requirements

8.4.3 Orientation Design Requirements

The following are design requirements for establishing an orientation within a space module:

a. Consistent Orientation - Each crew station shall have a consistent orientation within a given visual field (see Figure 8.4.3-1 for illustration).

b. Visual Orientation Cue - A visual cue shall be provided to allow the crewmember to quickly adjust to the orientation of the activity center or workstation.

c. Separation - When adjacent workstations or activity centers have vertical orientations differing by 90 degrees or more, then clearly definable demarcations shall separate the two areas.

8.5.3 Location Coding Design Requirements

8.5.3.1 Alphanumeric Coding Design Requirements

An alphanumeric coding system shall be established for the space module. The system shall have the following characteristics:

a. Ease of Use - The coding system shall be simple to use, communicate, and memorize.

b. Module Consistency - The coding system shall be consistent throughout the space module and attached components. The system shall be consistent for both interior and exterior locations.

c. User Consistency - The coding system shall be consistent for all personnel who use and maintain the module. The system shall be compatible with (if not identical to) design engineering location systems.

d. Flexibility - The coding system shall be flexible to allow adaptation to space module design changes and reconfiguration.

8.5.3.2 Directional Designation Design Requirements

Whenever possible, a consistent directional orientation shall be established *for the entire space module. The following directional designation terms shall* apply to space modules:

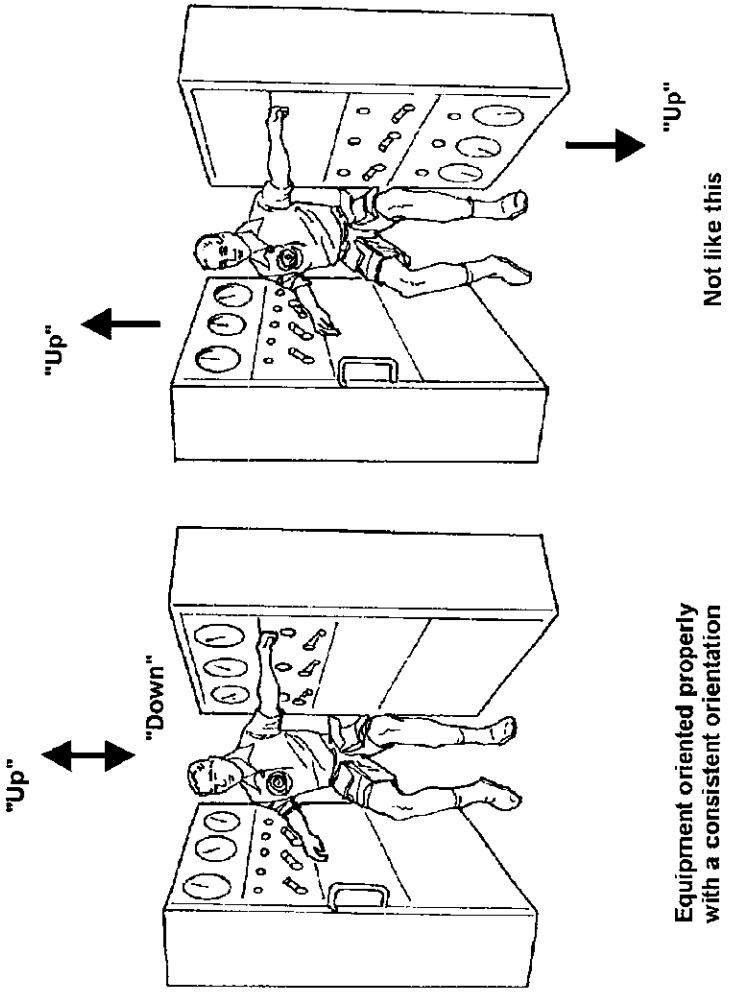

Figure 8.4.3-1 Equipment Shall Have A Consistent Orientation Within A Workstation or Activity Center

MSIS 87

a. Forward/Aft - Forward shall be defined by the plus velocity vector of the space module. *If there is no designated velocity vector, then "forward" shall be* arbitrarily defined.

b. Port/Starboard - When facing in the "forward" direction, "port" shall be defined as the direction to the left and "starboard" shall be defined as the direction to the right .

c. Up/Down - An Up/Down directional designation shall be established perpendicular to the Forward/Aft and Port/Starboard plane. If the space module has a stable orientation relative to a planetary body, then be defined as the direction toward the planetary body. Otherwise, "down" shall be arbitrarily defined.

8.5.3.3 Location & Orientation By Color Coding Design Requirements

The following requirements apply to the use of color for location and orientation coding:

a. Colors - The colors selected for coding shall be consistent with the requirements in Paragraph 9.5.3.2.i, Color Coding.

b. Consistency - If color is used for location coding purposes, the colors shall have the same operational significance throughout the space module and shall be consistent in application.

c. Space Module Lighting - Exterior lighting for orientation coding of space *module shall be in accordance with the following practices:*

   1. Color code - The colors shall follow the code in Figure 8.5.3.3-1

   2. Lamp intensity - Minimum lamp intensity is cited in Figure 8.5.3.3-1. These intensities assume color recognition at 600 meters (2000 feet). If greater recognition distances are required, then luminous intensities shall be increased accordingly. The intensities are to be measured 30 degrees off the centerline of the cone of radiation.

   3. Chromaticity - The chromaticity of space module lights shall be as defined in Figure 8.5.3.3-1 and MIL-C-25050.

8.5.3.4 Location Coding With Placards Design Requirements

A space module shall have markings to provide the crew with equipment and compartment identification, and directional and spatial orientation information. The specific requirements for location coding placards are as follows:

a. Map - A map of location codes shall be provided at the entrances to areas where the coding scheme is not obvious to the crewmember or for areas in which there is a significant amount of preparation activity such as stowage, adjustment, or maintenance of items.

b. Placards on Movable Items - Movable items and their stowage locations shall be labeled as necessary to ensure the item is returned to the proper location after use.

c. Control Room Placards - Control rooms shall have placards which identify the room and the control station within the room.

d. Directional Designation - A visual cue shall be provided to allow the crewmember to quickly adjust to the orientation of the crew station.

(Refer to Paragraph 8.4.3 Orientation Design Requirements, for additional information concerning orientation requirements.)

e. Markings - Label and placard format and markings shall meet the requirements in Paragraph 9.5, Labeling and Coding.

Color	Vehicle location	Luminous intensity * candella (candlepower)	Chromaticity (CIE chromaticity diagram coordinates)
Aviation red	Port (left) side	2.5 (0.2)	Y = not greater than 0.330 X = not less than 0.650
Aviation green	Starboard (right) side	6.3 (0.5)	Y = not less than 0.390 X = not greater than 0.270
Aviation yellow	Bottom	2.5 (0.2)	Y = not less than 0.380 X = not greater than 0.530
Aviation white	Aft (preferred)	2.5 (0.2)	Y = 0.300 to 0.400 X = 0.300 to 0.400
Aviation blue	Aft (not preferred)	6.3 (0.5)	Y = not greater than 0.200 X = not greater than 0.245
Dual aviation white/ aviation yellow	Forward	See above	See above

Figure 8.5.3.3-1 Spacecraft Orientation Coding Lights
MSIS 88

*** Assumes color recognition up to 600 meters (2000 feet)**

8.6.3 Envelope Geometry Design Requirements

Figure 8.6.2.3-1 has been included to illustrate accommodation of the body motion envelope of the 95th percentile american male

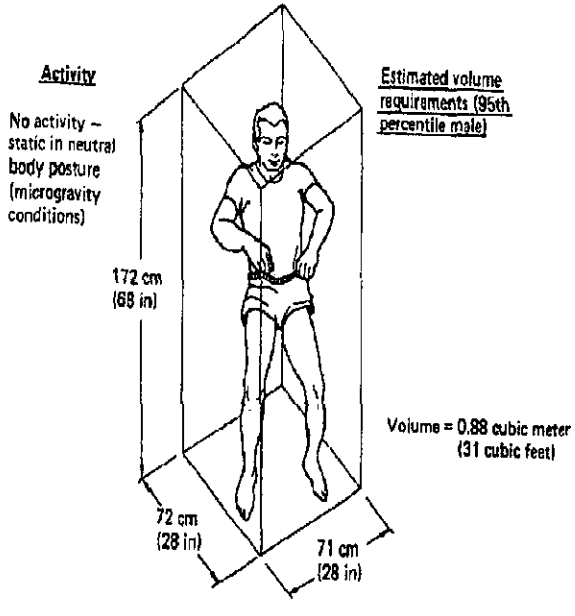

Figure 8.6.2.3-1 Approximate Dimension Required to Accomodate the Body Motion Envelope of the 95th Percentile American Male

MSIS 92
1 of 2

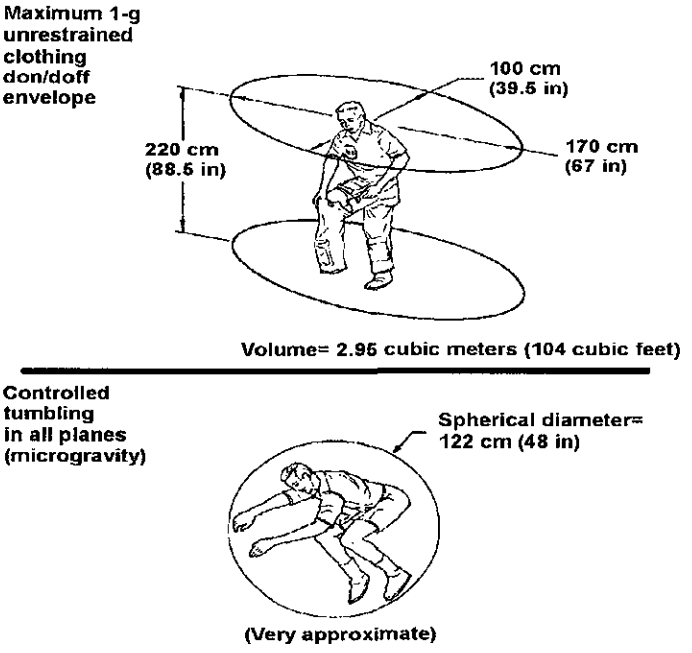

Figure 8.6.2.3-1 Approximate Dimension Required to Accomodate the Body Motion Envelope of the 95th Percentile American Male (Continued)

MSIS 92
2 of 2

8.6.3.1 Crew Station Body Envelopes Design Requirements

The following are requirements for crew station body envelope geometry:

a. Adequate Volume

b. Accessibility

c. Full Size Range Accommodation

8.6.3.2 Total Module Habitable Volume Design Requirements

8.7.3 Traffic Flow Design Requirements

8.7.3.1 Overall Traffic Flow Design Requirements

8.7.3.2 Congestion Avoidance Design Requirements

Traffic congestion shall be avoided. The following methods shall be taken to avoid congestion:

a. Reduce the Need for Traffic

b. Alternate Paths

c. Proper Scheduling

d. Reduce Congestion Due to Large Volume Transfer

e. Reduce Cross Traffic

f. Translation Path Size

8.7.3.3 Noninterference with Other Activities Design Requirements

8.7.3.4 Emergency and Escape Route Design Requirements

The design for traffic flow shall take into account the possibility of a space module or subsystem failure or damage that could require evacuation. Specifically, the following requirements apply:

a. Escape Routes and Isolation Areas

b. Dual Escape Routes

c. Protection of Entry/Exit Path

d. Escape From Crew Stations

e. Emergency Rescue and Return Route

f. Dead End Corridors

g. Emergency Regulation and Routes

8.8.3 Translation Path Design Requirements

8.8.3.1 Minimum Translation Path Dimensions Design Requirements

Minimum cross sectional dimensions of microgravity translation paths for one crewmember in light clothing are shown in Figure 8.8.3.1-1. Translation paths that must accommodate more than one crewmember shall be enlarged by multiples of the single person dimensions.

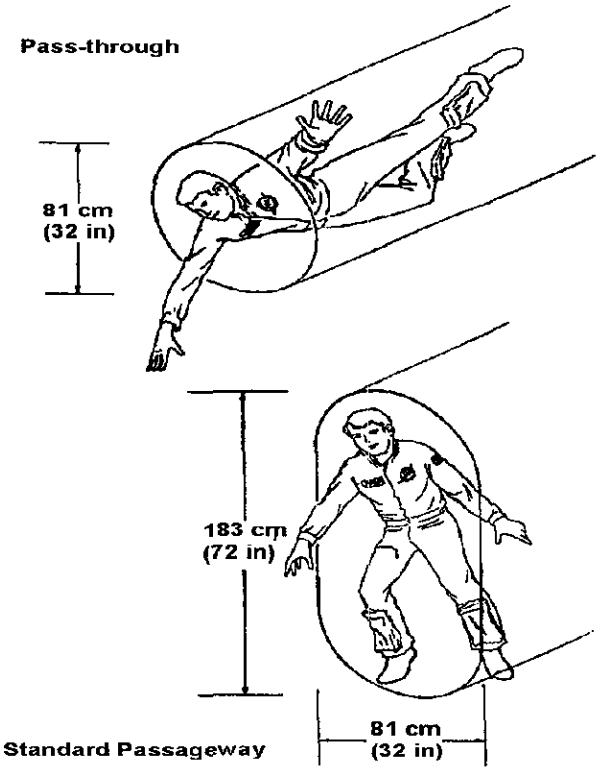

Figure 8.8.3.1-1 Minimum Translation Path Dimensions for Microgravity, One Crew Member In Light Clothing

MSIS 213

8.8.3.2 Clearances Design Requirements

In addition to the minimum dimensions given in Paragraph 8.8.3.1, translation paths shall be designed to provide the following clearances:

a. Equipment or Package Clearances

b. Orientation and Directional Change Clearances

8.8.3.3 Translation Path Obstructions and Hazards Design Requirements

The following translation path obstructions and hazards shall be minimized:

a. Injury or Damage From Translation Path Surface

b. Damage to Nearby Equipment

c. Collisions at Intersections

d. Obstructions and Entanglements

8.8.3.4 Marking of Translation Paths - Design Requirements

Emergency translation paths shall be marked in accordance with MIL-A-25165B.

8.9.3 Mobility Aids and Restraints Design Requirements

8.9.3.1 IVA Mobility Aid Integration Design Requirements

The following are requirements for integration of fixed IVA mobility aids into the space module architecture:

a. Translation Path Locations

b. Orientation Requirements

c. Noninterference

d. Contingency Space Suited Operations

8.9.3.2 IVA Restraint Integration Design Requirements

The following are requirements for integration of fixed IVA restraints into the space module architecture:

a. Crew Stations

b. Areas Where High Force Application is Required

c. Space Medical Facility

d. Undesirable Areas

e. Noninterference

8.10.3 Hatch and Door Design Requirements

8.10.3.1 Location Design Requirements

Hatches and doors shall meet the following location requirements:

a. Internal Door Placement

b. Away From Hazards

c. Emergency Passage

8.10.3.2 Pressure Hatch Indicator/Visual Display Design Requirements

Pressure hatch covers shall have the following visual displays and indicators:

a. Visual Inspection of Hatch Security - A means shall be provided on both sides of the pressure hatch for visual safety check to ensure that it has been secured properly.

b. Remote Status Display

c. Pressure Difference Indicators - Pressure hatches shall have pressure difference indicators visible on both sides of the hatch.

d. Windows - All airlock hatches shall have windows for visual observation of all decompression operations with a minimum of blind spots inside the airlock.

(Refer to Paragraph 11.11.3, Window Design Requirements, for detailed window design specifications.)

e. Operating Instructions - All pressure hatches shall display operating procedures on both sides of the hatch.

(Refer to Paragraph 9.5.3.1.8, Operating Instruction Design Requirements.)

8.10.3.3 Opening and Closing Mechanisms Design Requirements

The hatch and door opening and closing mechanisms shall meet the following design requirements:

a. Emergency Operation - Latching mechanisms shall provide for emergency operation in case of a latching system failure.

b. EVA Operation - All opening/closing mechanisms shall be operable by a pressure-suited crewmember.

c. Operation From Both Sides - Hatches shall be capable of being operated, locked, and unlocked from either side.

d. Interlock - Pressure hatches shall be prevented from unlatching prior to pressure equalization.

e. Single Crewmember Operation - Hatches shall be capable of being operated by one crewmember.

f. Parts Tethering - All safety pins or other detachable parts required for the opening/closing shall be tethered and able to be stowed.

g. Emergency Closing - Hatches and doors shall allow crewmembers to close covers with or against pressure differentials, for the worst case pressure differential anticipated.

h. Rapid Closing - Hatches used to isolate interior areas of the space module shall be designed to allow rapid closing.

8.10.3.4 Operating Forces Design Requirements

Hatch and door cover operating forces shall meet the following requirements:

a. Emergency Operation - Forces for emergency manual backup operation or breakaway of jammed internal hatches and doors shall not exceed 445 Newtons (100 lbs).

b. Latch Operations - The force required to operate door and hatch latches shall not exceed the strength of the weakest of the defined crewmember population strength range.

(Refer to Paragraph 4.9.3, Strength - Design Requirements, for strength data.)

c. Open/Close Force - Normal opening and closing forces for internal doors shall not exceed 22 Newtons (5 lbs).

d. Restraints - Restraints shall be provided as necessary to counteract body movement when opening or closing the hatch.

8.10.3.5 Minimum Size Design Requirements

Personnel hatch and door opening size shall be as large as practical. The hatch or door opening shall be free of protrusions which might injure personnel or damage equipment. The minimum size of these openings shall accommodate passage of the largest replaceable module or crewmember (whichever is larger) intended to pass through the opening.

8.10.3.6 Door and Hatch Shape Design Requirements

Doors and pressure-sealing hatches shall be shaped such that they can pass through the opening into which they are designed to fit/seal to allow for removal, **maintenance, repair, relocation, etc.**

8.11.3 Window Integration Design Requirements

The following are requirements for the architectural integration and design of windows:

a. Required Windows - Properly located and sized windows shall be provided for the following functions:

   1. Off duty recreational viewing by the crewmembers.

   2. As necessary for interface with EVA activities.

   3. To support proximity operations.

   4. To support external inspection of adjacent modules, structures, and/or other spacecraft.

   5. As necessary for scientific celestial or Earth observations.

   6. For observation of decompression through airlock and pressure hatch covers. Windows shall be located and configured with minimum blind areas inside the decompression area. Windows shall allow a 90° field of view for an eye reference point located along a normal to the window opening. This normal passes through the geometric center of the opening. This reference point shall be located half the window opening dimension from the inner pane.

b. Adequate Space Around Windows - The arrangement of equipment near the windows shall allow adequate space for the performance of designated operational, maintenance, and recreational tasks by the largest of the defined crewmember population size range.

c. Restraints - Restraints shall be provided in microgravity conditions when necessary for window task performance.

d. Compatibility With Adjacent Area - Crew stations and activities around the window location shall be compatible with the use of the window. This compatibility shall include the following:

   1. Lighting - Provisions shall be made to preclude degradation of the performance of the window viewer or surrounding crew activities by the lighting environment.

   2. Traffic - Traffic at the window area shall not degrade the performance of the window viewer or activities at adjacent crew stations.

8.12.3 Interior Design and Decor Design Requirements

8.12.3.1 Aesthetic and Psychological Requirements

8.12.3.2 Decor Flexibility

8.12.3.3 Color Selection

8.12.3.4 Decor Cleaning and Maintenance

8.12.3.5 Decor Durability

8.12.3.6 Safety

8.13 LIGHTING

8.13.3 Lighting Design Requirements

8.13.3.1 Illumination Level Design Requirements

8.13.3.1.1 General Interior Illumination Levels Design Requirements

The general illumination of Space Station Freedom shall be a minimum of 108 lux (10 foot-candles) of white light.

(Refer to Paragraph 9.2.2.2.1, Workstation Illumination Design Requirements, for specific workstation task lighting requirements.)

(Refer to Paragraph 14.4.3.3, EVA Workstation Lighting Design Requirements, for EVA lighting requirements.)

8.13.3.1.2 Illumination For Specific Tasks Design Requirements

The lighting level shall be measured on the primary work surfaces visual interface or 30 inches above the floor where appropriate. Measurement shall be taken at 80% of maximum power.

Specific IVA task lighting requirements are defined in Figure 8.13.3.1.2-1 which also defines illumination levels for workstations. EVA lighting requirements are in Paragraph 14.4.3.3, EVA Workstation Lighting Design Requirements.

8.13.3.1.3 Illumination Levels of Sleeping Areas Design Requirements

The following requirements apply to the illumination of sleeping areas:

a. The lighting level shall be adjustable from "off" to the maximum for sleeping areas.

b. Minimum lighting of 30 Lux (3 ft. cd), or other means of visual orientation shall be provided to permit emergency egress from sleeping areas.

8.13.3.1.4 Illumination Levels for Dark Adaptation Design Requirements

If maximum dark adaptation is required, red light or low level white lighting [CIE color coordinates for x and y equals 0.330 +/- 0.030 (1932)] is acceptable. All trans-illuminated displays and controls shall be visible when all other lighting is turned off.

When dark adaptation is required for performance of tasks, the following measures shall be taken:

a. Low Level Lighting - Low level lighting shall be provided for task performance which minimizes loss of dark adaptation.

Area or Task	LUX	(Ft. C.)
GENERAL	108	(10)
PASSAGEWAYS	54	(5)
Hatches	108	(10)
Handles	108	(10)
Ladders	108	(10)
STOWAGE AREAS	108	(10)
WARDROOM	215	(20)
Reading	538	(50)
Recreation	323	(30)
GALLEY	215	(20)
Dining	269	(25)
Food Preparation	323	(30)
PERSONAL HYGIENE	108	(10)
Grooming	269	(25)
Waste Management	164	(15)
Shower	269	(25)
CREW QUARTERS	108	(10)
Reading	323	(30)
Sleep	54	(5)
HEALTH MAINTENANCE	215	(20)
First Aid	269	(25)
Surgical	1076	(100)
I.V. Treatment	807	(75)
Exercise	538	(50)
Hyperbaric clinical lab	538	(50)
Imaging televideo	538	(50)
WORKSTATION	323	(30)
Maintenance	269	(25)
Controls	215	(20)
Assembly	323	(30)
Transcribing	538	(50)
Tabulating	538	(50)
Repair	323	(30)
Panels (Positive)	215	(20)
Panels (Negative)	54	(5)
Reading	538	(50)
NIGHT LIGHTING	21	(2)
EMERGENCY LIGHTING	32	(3)

Note:
Levels are measured at the task or 760 mm (30 in) above floor.
All levels are minimums.

Figure 8.13.3.1.2-1 Space Vehicle Illumination Levels

MSIS 291

b. Protection From Stray Light - Areas requiring low level illumination shall be protected from external light sources.

1. All external windows shall be provided with protective light shields (shades, curtains, etc.)

2. All doorways shall be lightproof when closed.

8.13.3.2 Light Distribution Design Requirements

8.13.3.2.1 Glare From Light Sources Design Requirements

The following measures shall be taken where possible to avoid glare from artificial light sources.

a. Light Sources in Front or to the Side of Operators - Locate light sources so that they do not shine directly at the operator. This includes the range within 60° to any side of the center of the visual field.

b. Source Brightness and Quantity - Use more relatively dim light sources, rather than a few very bright ones.

c. Glare Protection - Use polarized light, shields, hoods, lens, diffusers, and/or visors to reduce the glare.

d. Indirect Lighting - Use indirect lighting wherever possible.

e. Luminance Ratio - The luminance ratio for the luminaries shall not exceed 5:1 maximum to the average over the viewing area (average luminance is six readings on the luminance area).

8.13.3.2.2 Reflected Glare Design Requirements

a. Luminance of specular reflectance from the task background shall not be greater than 3 times the average luminance of the immediate background.

b. Luminance of specular reflectance from a remote task shall not be greater than 10 times the average luminance from the remote background.

c. Surface Reflection - Work surface reflection shall be diffused and shall not exceed 20 percent specularity.

d. Angle of Incidence - Arrange direct light sources so their angle of incidence to the visual work area is not the same as the operator's viewing angle.

e. Polished Surfaces - Avoid placement of smooth, highly polished surfaces within 60° of normal to the operator's visual field.

f. Light Source Behind Operator - Do not place bright light sources behind operators so that eyeglasses or display faces can reflect glare into the operator's eyes.

8.13.3.2.3 Brightness Ratio Design Requirements

a. Wall surface average luminance shall be within 50-80% of ceiling surface average luminance.

b. The maximum and minimum luminance ratio for any individual surface shall not exceed 10:1.

c. The brightness ratios between the lightest and darkest areas and/or between task area and surroundings shall be no greater than specified in Figure 8.13.3.2.3-1.

Comparison	Environmental classification[a]		
	A	B	C
Between lighter surfaces and darker surfaces within the task	5 to 1	5 to 1	5 to 1
Between tasks and adjacent darker surroundings	3 to 1	3 to 1	5 to 1
Between tasks and adjacent lighter surroundings	1 to 3	1 to 3	1 to 5
Between tasks and more remote darker surfaces	10 to 1	20 to 1	b
Between tasks and more remote lighter surfaces	1 to 10	1 to 20	b
Between luminaires and adjacent surfaces	20 to 1	b	b
Between the immediate work area and the rest of the environment	40 to 1	b	b

Notes:

[a] **A-** Interior areas where reflectance of entire space can be controlled for optimum visual conditions.

B- Areas where reflectance of immediate work area can be controlled, but there is only limited control over remote surroundings.

C- Areas (indoor and outdoor) where it is completely impractical to control reflectances and difficult to alter environmental conditions.

[b] Brightness ratio control not practical.

Figure 8.13.3.2.3-1 Required Brightness Ratios

MSIS 224

8.13.3.3 Light Color Design Requirements

Artificial light shall meet the following color requirements:

a. White Light - Work areas of Space Station Freedom shall be illuminated with white light. Color temperature shall be 5000°K or greater for fluorescent lighting and greater than 3800°K for incandescent lighting.

b. Color Temperature Variation - Light sources shall have a correlated color temperature within the visual field of 300°K when operated at maximum power.

c. Color Rendition - Unless otherwise specified the minimum CIE general color rendering index (R_a) of any light source shall be 90 or better, with no special index (R_i) of any one test color sample less than 70.

See Paragraph 9.5.3.2 j for color coding information relative to illuminated displays.

8.13.3.4 Lighting Fixtures and Controls Design Requirements

The following design requirements apply to lighting fixtures and their controls:

a. Emergency Lights

b. Controls

c. Flicker

d. Fixture Protection

e. Portable Lights

8.13.3.5 Medical Lighting Requirements

a. Habitation Module and Hyperbaric Chamber Ambient Light Requirements:

1. The light intensity shall be as specified in Figure 8.13.3.1.2-1.

2. The minimum (contingency) illuminate needed for patient treatment is 500 lux (46 ft. cd.).

3. The light source shall have a color Temperature of 5000°K. If filament lamps are used for light sources, color temperature shall be 4200° Kelvin or greater.

4. Color temperature match and uniformity shall be in accordance with paragraphs 8.13.3.3 b and 8.13.3.3 c .

b. Surgical Lighting:

1. The surgical light will double as a dental light.

2. Requirements of 8.13.3.5 a.3 and 8.13.3.5 a.4 also apply for surgical light.

3. The maximum illuminate to support surgical procedures shall be 4000 lux maximum (872 ft. cd.) to the center of a surface area of 500 square centimeters (77.5 in^2) located 147 cm (5 ft.) from the work area.

4. The illuminate may taper from the center of the pattern to the edge no more than 20% of the maximum illuminate.

5. The luminaries must be directable through a complete hemisphere.

6. The luminaries must be focusable from a pattern diameter of 45 cm (18.5 in) down to 5 cm (2 in).

7. Shadows in the surgical field shall be minimized by luminaries design.

8. Radiant energy in the spectral region of 800 to 1000 nm shall be minimized.

c. Clinical Laboratory Workstation Lighting - The minimum illuminate at the workstation surface shall be as specified in Figure 8.13.3.1.2-1.

d. Imaging Lighting:

1. Requirements 8.13.3.5 a.3 and 8.13.3.5 a.4 also apply to imaging lighting.

2. The minimum illuminate to provide adequate lighting for televideo systems is given in Figure 8.13.3.1.2-1.

8.13.3.6 Workstation Illumination Design Requirements

a. Illumination - Workstation illumination shall be determined by the tasks to be accomplished. Illumination requirements are given in Figure 8.13.3.1.2-1.

b. Adjustable Illumination - Workstation illumination shall be fully adjustable down at OFF.

c. Supplementary Lighting - Portable lighting shall be available for use when additional lighting is required at a workstation.

d. Light Distribution - Illumination shall uniformly cover the entire work/display area. The minimum ratio for differences in illumination within a work area shall meet the following specifications.

1. Primary viewing areas (30 to 60 degree visual angle about primary lines of sight) - Maintain a 3:1 ratio.

2. Adjacent viewing areas (30 to 60 degree band surrounding primary viewing areas) - Maintain a 5:1 ratio.

3. Workstation area outside "adjacent viewing areas" - Maintain a 10:1 ratio.

e. Shadows - Placement for lighting sources shall be such that shadows are not created on working surfaces or information displays by normal positioning of crewmembers or equipment.

f. Reflections - Lighting sources shall be designed and located to avoid creating reflections or glare from working and display surfaces, as viewed from any working position that might interfere with task performance.

NOTES

NOTES

9.2.2.2.1 Workstation Illumination Design Requirements

Requirements pertaining to workstation illumination in 8.13.3.6.

9.2.2.2.2 Congestion and Interference Design Requirements

9.2.2.2.3 Orientation Design Requirements

9.2.2.2.4 Workstation Color Design Requirements

(Refer to Paragraph 9.5.3.2 i, Color Coding, for related information.)

a. Color Selection - Neutral colors shall be used in workstations.

b. Reflections - Workstation surface colors shall be lusterless.

c. Controls:

   1. Controls shall be black or grey unless special functions dictate otherwise (e.g., emergency evacuation controls are striped black and yellow).

   2. Toggle switch handles shall have a satin metallic finish.

   3. Control colors shall provide good contrast between controls and background.

d. Panel Color Finish - The panel color shall provide good contrast between the labels and background. Label/background colors shall be consistent within a functional area.

e. Consoles and Pedestals - The color of structural members of control consoles and pedestals and overhead mountings for control units shall be consistent with surrounding areas.

f. Meter Bezels - The meter bezels shall be the same color specified for the particular panel on which the meter will be used.

9.2.3.2.1 Control Spacing Design Requirements

a. Normal Spacing - Minimum and preferred spacing for different types of controls are shown in Figure 9.2.3.2.1-1 for the ungloved condition.

b. Gloved Operation - All space modules shall have those controls necessary for maintenance and recovery following a depressurization operable by a space-suited crewmember.

(Refer to Paragraph 14.4.3, EVA Control and Display Design Requirements, for specific requirements.)

9.2.3.2.2 Display Readability Design Requirements

a. Accessibility - Displays shall be visually accessible.

b. Parallax Error - Displays shall be located so that they can be read from the design eye point with no discernible parallax.

c. Orientation - Display faces shall be perpendicular to the operator's line-of-sight whenever feasible. The angle between the line-of-sight and the normal to the display shall always be less than 30 degrees.

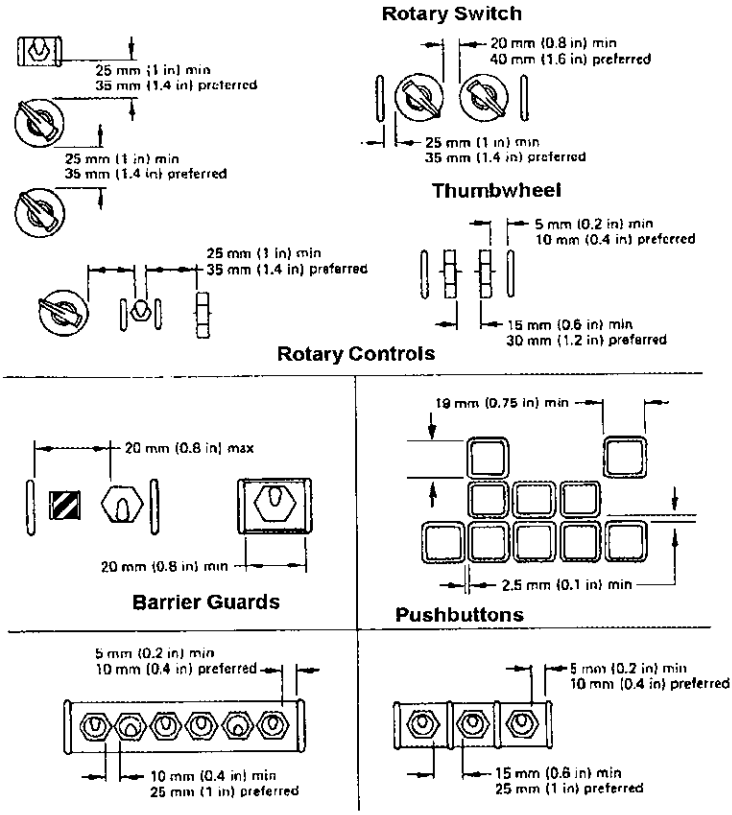

Figure 9.2.3.2.1-1 Control Spacing Requirements for Ungloved Operation

MSIS 256

d. Simultaneous Use - A visual display that must be monitored concurrently with manipulation of a related control shall be located so that it can be read to within required accuracy while adjusting the control.

e. Display Functionality - Displays shall provide positive and unambiguous indication of system state (e.g., a light indicating "power on", a blinking cursor indicating "ready"). These positive indications shall be used consistently throughout the space module.

9.2.3.2.3 Control/Display Grouping Design Requirements

a. Functional Grouping - Displays and/or controls that are functionally related shall be located in proximity to one another - arranged in functional groups (e.g., power, status, test).

b. Sequential Grouping - When a unique sequence of control actions exists, the controls and/or displays shall be arranged in relation to one another according to their sequence of use. Within a functional group, the sequence shall be from left to right or top to bottom whenever feasible.

c. Logical Flow Grouping - When there is not a unique sequence or functional grouping of control actions, controls and displays shall be arranged in a manner consistent with their logical flow.

If controls are not to be utilized in any specific sequence, then consider arranging them by importance with the most important or frequently used control in the most accessible position.

d. Functional Group Markings - If several functional groupings of displays and controls are placed in close proximity on a control panel, an effective means of discriminating between them shall be provided (e.g., color coding or outlining).

e. Left-to-Right Arrangement - If controls must be arranged in fewer rows than displays, controls affecting the top row of displays shall be positioned at the far left; controls affecting the second row of displays shall be placed immediately to right of the these, etc.

f. Vertical and Horizontal Arrays - If a horizontal row of displays must be associated with a vertical column of controls or vice versa, the farthest left item in the horizontal array shall correspond to the top item in the vertical array, etc. However, this type of arrangement shall be avoided whenever possible.

g. Multiple Displays - When the manipulation of one control requires the reading of several displays, the control shall be placed as near as possible to the related displays, but not so as to obscure displays when manipulating the control.

h. Separate Panels - When functionally related controls and displays must be located on separate panels and both panels are mounted at approximately the same angle relative to the operator, the control positions on one panel shall correspond to the associated display positions on the other panel. The two panels shall not be mounted facing each other. Controls and displays on separate panels are discouraged.

9.2.3.2.4 Preferred Control/Display Location Design Requirements

a. Display Location - The most important and frequently used displays shall be located in a privileged position in the optimum visual zone, providing that the integrity of grouping by function and sequence is not compromised. See Figure 9.2.4.2.2-2 for a definition of this zone.

b. Control Location - The most important and frequently used controls shall have the most favorable position with respect to ease of reaching and grasping (particularly rotary controls and those requiring fine settings), providing that the integrity of grouping by function and sequence is not compromised.

c. Multi-G Control Placement - Special attention shall be paid to the placement of controls which must be used while the crewmember is subject to either prolonged or transitory acceleration forces above 2-G.

1. In general, these controls shall be located so that the operator's limb is always in contact with the control (i.e., no reaching is required).

2. The requirements for movement from one control to another shall be minimized (e.g., use combined controls with several functions mounted on a single shaft).

3. Rotary controls shall be selected in preference to linear controls whenever possible.

4. When linear controls are necessary, they shall be mounted so that the direction of operation is perpendicular to the direction of G-forces.

5. Hand controls shall be placed so that when the shoulder, elbow, forearm, and wrist are supported, the following minimum movements can be made: MOVEMENT ACCELERATION - Arm Up to 4-G, Forearm Up to 5-G, (9-G if arm is counterbalanced), Hand Up to 8-G, and Finger Up to 10-G.

d. Control/Display Relationships:

1. The relationships of a control to its associated display and the display to the control shall be immediately apparent and unambiguous to the operator.

2. Controls shall be located adjacent to their associated displays and positioned so that neither the control nor the hand normally used for setting the control will obscure the display.

9.2.3.2.5 Consistent Control/Display Placement Design Requirements

a. Similarity - The arrangement of functionally similar or identical displays and controls shall be consistent from panel to panel throughout and between systems, equipment, units, and vehicles.

b. Mirror Images - Mirror image arrangements shall not be used.

9.2.3.2.6 Maintenance Controls/Displays Design Requirements

Controls and displays used solely for maintenance and adjustments shall be covered or non-visible during normal equipment operation, but shall be readily accessible when required.

(Refer to Section 12.0, Design for Maintainability, and Paragraph 9.2.3.2.1b, Gloved Operation, for additional information.)

9.2.3.2.7 Emergency Control/Display Placement Design Requirements

(Refer to Paragraph 9.4.4.3, Caution and Warning System Design Requirements, for related information.)

a. Emergency Control/Display Placement - Emergency displays and controls shall be located where they can be seen and reached with minimum delay.

b. Computer-Generated Emergency Displays - Emergency information depicted on existing computer-controlled displays shall be sufficiently conspicuous to attract the user's attention consistently.

9.2.3.2.8 Control/Display Movement Compatibility Design Requirements

a. Consistency of Movement - Controls shall be selected so that the direction of movements of the control will be consistent with the related movement of an associated display, equipment component, or vehicle (except as noted in "b" below). It must be borne in mind that in some situations, as in the case of a video camera being mounted on the wrist of a remote manipulator arm, logical movement will dictate that movement of the display not be in the same direction as movement of the control. This dictates that any control/display system which is likely to be used in conjunction with

another system needing such a "reverse" motion capability be designed to accommodate same in any direction in which the display can indicate movement.

b. Complex Movement Control - When the vehicle, equipment, or components are capable of motion in more than two dimensions, exception to 9.2.3.2.8 a shall be made to:

1. Maintain consistency with other systems.

2. Maintain a natural association between control and system movements. For example, forward motion of a directional control causes some vehicles to dive or otherwise descend rather than to-simply move forward.

c. Conflict Avoidance - When several controls are combined in one control activity, caution shall be exercised to avoid a situation in which similar movement of different controls results in different systems responses (e.g., control motion to the right is compatible with clockwise roll, right turn, and direct movement to the right).

d. Remote Controls - Where controls are operated at a position remote from the equipment or controlled vehicle, they shall be arranged to facilitate consistency of movement.

e. Movement Direction - When a rotary control and linear display are in the same plane, the part of the control adjacent to the display shall move in the same direction as the moving part of the display.

f. Labeling - When control/display relationships specified herein cannot be adhered to, controls shall be clearly labeled to indicate the direction of control movement required.

g. Time Lag - The time lag between the response of a system to a control input and the display presentation of the response shall be minimized, consistent with safe and efficient system operation. Where such time delay exceeds acceptable limits, the action of the control shall be appropriately modified (by force feedback or other means) to avoid overcontrol. Immediate feedback for operator entries shall have not more than a .2 sec delay. Simple requests for data shall be carried out more rapidly than .5 to 1.0 sec, while changes of entire data pages may be executed in up to 10 sec, depending on the user's expectations and the criticality of the information. If processing requirements result in longer delays, then the system shall acknowledge a control input immediately and provide periodic updates showing the progress of the processing.

(Refer to Paragraph 9.6.2.9.2.d and 9.6.2.9.2.e, Response Time, for recommended system response times for interactive computer-generated displays.)

9.2.3.2.9 Control/Display Movement Ratio Design Requirements

a. Adjustment Time - Control/display ratios for continuous adjustment controls shall minimize the total time required to make the desired control movement (i.e., slewing time plus fine adjusting time) consistent with display size, tolerance requirements, viewing distance, and time delays.

b. Range of Display Movement:

1. When a wide range of display element movement is required, small movement of the control shall yield a large movement of the display element.

2. When a small range of display movement is required, a large movement of the control shall result in a small movement of the display, consistent with accuracy requirements.

c. Coarse/Fine Knob Setting - A rotary knob used for coarse control shall move an associated display element (linear scale) 3-6 times the distance of a fine control knob per revolution of the knob.

d. Bracketing - When bracketing is used to locate a maximum or minimum value (e.g., as in tuning a transmitter), the control knob shall swing through an arc of not less than 10 degrees nor more than 30 degrees either side of the target value in order to make the peak or dip associated with that value clearly noticeable.

e. Counter - When counters are provided, the control/display ratio shall be such that one revolution of the knob produces approximately 50 counts.

9.2.3.2.10 Control/Display Complexity and Precision Design Requirements

9.2.4.2 Human/Workstation Configuration Design Requirements

9.2.4.2.1 Workstation Anthropometric Design Requirements

9.2.4.2.2 Visual Space Design Requirements

a. Viewing Distance:

1. Minimum - The effective viewing distance to displays, with the exception of visual display terminal (VDT) displays and collimated displays, shall not be less than 330 mm (13 in) and preferably not less than 510 mm (20 in.).

   When using a VDT, a minimum viewing distance of 410 mm (16 in.) shall be provided. The recommended distance depends on the detail and resolution of the display, but would generally be greater than 410 mm (16 in.). When periods of scope observation will be short, or when dim signals must be detected, the viewing distance may be reduced to 250 mm (10 in.).

2. Maximum - The maximum viewing distance to displays located close to their associated controls is limited by reach distance and shall not exceed 710 mm (28 in.). For other displays, there is no maximum limit, other than that imposed by space limitations and visual requirements, provided the display is properly designed.

b. Line of Sight - A crewmember's line of sight depends on body position and varies as a function of gravity level as shown in Figure 9.2.4.2.2-1.

c. Field of View - The field of view for a particular observer position is determined by eye and head movements.

1. The eye movement component for microgravity and 1-G is shown in Figure 9.2.4.2.2-2. (Note that the field of view is measured with respect to the shown in Figure 9.2.4.2.2-1.)

2. The head movement component for 1-G is shown in Figure 9.2.4.2.2-2. Microgravity head_movement data are not yet available and probably differs from 1-G.

d. Visual Distractions - Workstations shall be designed so that stimuli distracting to the operator are minimized.

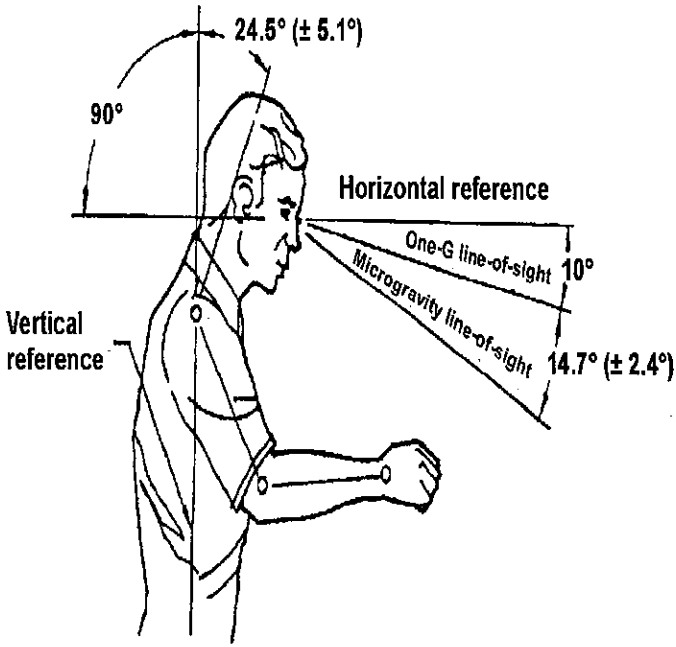

Figure 9.2.4.2.2-1 Line-of-Sight for One-G and Microgravity

MSIS 227

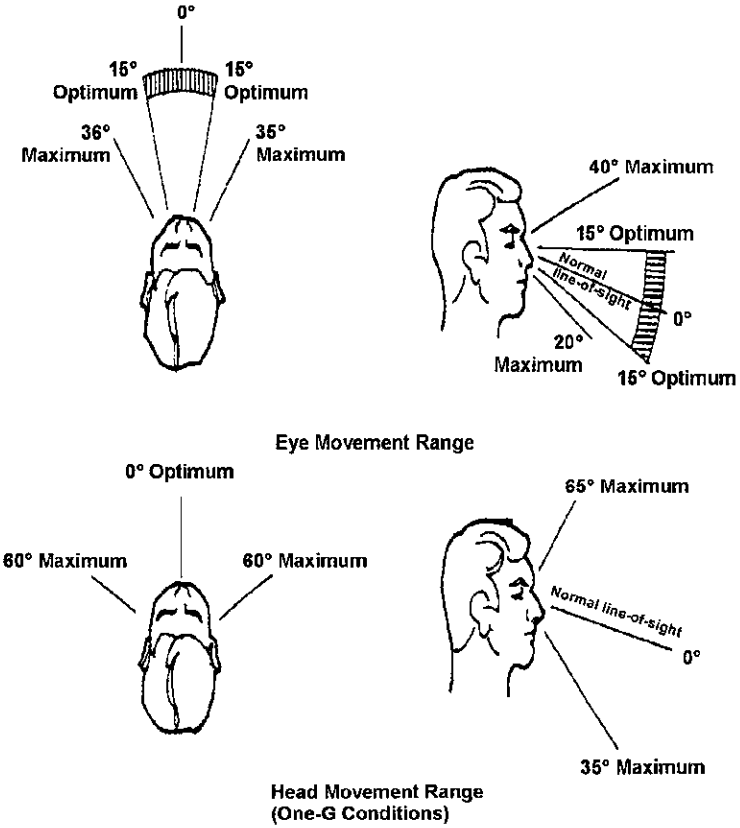

Figure 9.2.4.2.2-2 Eye and Head Movement Ranges (Line-of-Sight Depends on G-Level)

MSIS 228

9.2.4.2.3 Workstation Restraints and Mobility Aid Design Requirements

(Refer to Paragraph 11.7.2.3, Personnel Restraints Design Requirements, for specific design requirements relating to different types of restraints.)

a. Neutral Body Posture - The neutral body posture (see Figure 3.3.4.3-1) shall be used in the design of microgravity restraints. For short periods of time, significant variation from neutral body posture are acceptable but not desirable.

b. Freedom of Movement - A workstation restraint shall allow the users within the defined anthropometric range to reach all required controls and view all required displays without having to assume uncomfortable or awkward postures.

   1. Eye Position and Reach - Restraints shall be adjustable so as to achieve the best compromise between eye position (relative to displays)and reach (relative to controls) for crewmembers of differing heights.

   2. Adjustment of position shall be rapid and convenient, preferably without crewmembers having to exit restraint.

c. Required Restraint Placement - Foot, waist, or other restraint systems shall be located at all IVA workstations that require a crewmember to perform the following types of tasks.

   1. Long-term visual monitoring.

   2. Extensive manipulations requiring the use of both hands.

   3. Any task that requires the body position to be controlled.

d. Stability - As required, workstation restraints shall provide stability sufficient for:

   1. Viewing fine detail.

   2. Making fine manual adjustments.

   3. Exerting necessary force on controls without causing excessive body displacement.

   4. Executing continuous control movement when required.

e. Handholds and Handrails - Workstation handholds and handrails shall meet the following requirements:

   Refer to Paragraph 11.8.2.2, Handhold and Handrail Design Requirements, for additional requirements.)

   1. They shall aid in the translation and stability of crewmembers already in foot or other restraints.

   2. They shall allow unrestrained crewmembers access to workstation operations to the extent feasible.

   3. The physical dimensions and layout of the workstation handholds and handrails shall conform to the characteristics of the specific population of users for whom the system is to be designed.

   4. They shall not obstruct visual or physical access to workstations.

   5. They shall accommodate multiple personnel as required.

f. Equipment Restraints - Equipment restraints shall be provided to anchor every item of use that is not permanently attached to the workstation.

(Refer to Paragraph 11.7.3, Equipment Restraints.)

9.2.5.1.2 Window Workstation Design Requirements

(Refer to Paragraph 11.11, Windows, for requirements on the optical properties of windows as they apply to both humans and optical instruments, protection of humans from harmful window-related radiation, and the protection and maintenance of windows.)

a. Field of View:

1. Design Eye Volume - The required field of view for a window workstation shall be attainable with the observer's eye position located anywhere within a specified design eye volume.

b. Window Shape - Rectangular rather than round viewing areas shall be used on windows whenever feasible. The purpose is to provide orientation cues for crewmember body position and/or extravehicular objects relative to the space module.

c. Multi-Observer Windows - When feasible, windows shall accommodate more than one observer. Window shape and work area layout shall be designed to this end.

d. Shielding:

1. Luminance control - The capability to reduce window transmissivity through the addition of neutral filtering shall be provided. This shall allow crewmembers to work comfortably with extravehicular luminance conditions.

2. Complete closure - The capability to completely block light transmittal through a window shall be provided.

3. Sun Shades - When necessary, sun shades shall be provided. These shades shall be adjustable unless otherwise specified.

e. Color Discrimination - Windows used for making color discriminations shall possess neutral spectral transmission so that perceived target object hues are not altered.

f. Cleaning - Inside window surface shall be easily cleaned without damaging window.

(Refer to Paragraph 11.11.3.4, Window Maintenance Design Requirements, for additional information on window maintenance.)

g. Reflections - Workstation and work area design and lighting shall minimize reflections from the window to the lowest feasible level.

(Refer to Paragraph 11.11.3.2, Visual Protection Design Requirements, for information on antireflection techniques.)

h. Dark Adaptation - When dark adaptation is required at a window workstation, the workstation area shall allow dimming of lights to the required level without unduly interfering with other space module activities.

i. Display Shielding - Displays shall be shielded from sunlight entering the window or be designed to be legible in sunlight.

j. Control Placement - Control placement and design shall allow crewmembers to assume a position relative to the window that optimizes viewing conditions through the window.

k. Restraints - The design and placement of window workstation restraints shall allow up to four continuous hours of comfortable use.

9.2.5.2.2 Maintenance Workstation Design Requirements

a. Layout/Construction Requirements:

1. Location - The maintenance workstation shall be located in an easily accessible area.

2. Equipment size capability - The maintenance workstation shall be sized to accommodate the maximum-sized replacement unit/system that may require repair or maintenance.

3. Transparent Surfaces - All transparent surfaces (e.g., displays, windows, etc.) shall be scratch/mar resistant, antifog and anti-icing where possible, and shatter resistant.

4. Capabilities - The maintenance workstation shall be configured to support operational electrical, mechanical, vacuum, and fluid system corrective and preventive maintenance.

a) The maintenance workstation shall have general purpose diagnostic equipment and shall accommodate special purpose diagnostic equipment.

b) The maintenance workstation shall be equipped with a set of hand tools and with general purpose test and ancillary equipment and shall have ample stowage space for such tools, equipment, and supplies.

c) The maintenance workstation shall be developed with consideration being given toward providing capabilities for performing minor contingency fabrication tasks, including but not limited to turning, bending, forming, drilling, and bonding

5. The maintenance workstation shall be located in such a position that it will be convenient to accommodate extra-vehicular ORU's which must be maintained or serviced inside the pressurized volume.

b. Contamination:

(Refer to Paragraph 13.2.3, Housekeeping Design Requirements, for additional information on contamination control.)

1. Cleaning:

a) Exposed surfaces shall be designed to provide for easy cleaning. Crevices and narrow openings which can collect liquid or particulate matter and cannot be readily cleaned without special tools shall be avoided.

b) Any type of grid or uneven surface shall be configured to permit cleaning of all areas.

c) The maintenance workstation shall have a vacuum or evacuation system for purging and cleaning replacement units/systems. The vacuum effluence shall be contained to preclude external environment contamination.

d) Means shall be provided to control odors and/or to remove particulates from a system. All filters shall be easily accessible for cleaning and/or replacement. Means shall be provided to prevent leakage of any entrapped material from a filter unit during removal.

e) Maintenance workstations shall have the capability for the collection and disposal of debris, odors, particulate matter, and liquid from the workstation atmosphere as well as from exposed interior surfaces of the workstation.

f) Contamination Control:

1) The maintenance workstation shall provide for contamination control in the transport of devices to and from the maintenance workstation.

2) The maintenance workstation shall be provided with means to measure and monitor the contamination level within the work area, including the capability to measure surface contamination level.

3) The maintenance workstation shall have provisions for contamination control which assure prevention_of mutual contamination between the ambient environment and the work area.

4) The maintenance workstation shall provide a contamination control method for IVA maintenance operations actions which will be performed remote from the maintenance workstation.

2. Hazardous operations - The capability to seal hazardous maintenance operations from other areas shall be provided for the duration of the operation.

3. Particulate matter retention - The maintenance workstation shall be capable of particulate matter/ odor retention and effluent scrubbing/capture.

c. Restraints:

(Refer to Paragraph 11.7.2, Personnel Restraints, Paragraph 11.7.3, Equipment Restraints, Paragraph 8.9, Mobility Aids and Restraints Architectural Integration, and Paragraph 11.3, Drawers and Racks, for additional information.)

d. Replacement Unit Interface - The maintenance workstation shall be able to interface with the failure detection, fault isolation, and built-in test capability of replacement units (e.g., ORUs) as required.

e. Maintenance Aids Package - The maintenance workstation shall be provided with a common maintenance aids package which will include but not be limited to: audio, video, and data communication links; a data management system interface; and utilities.

f. Power - The maintenance workstation shall have the capability to provide conditioned and converted power to support replacement unit design-specified requirements for servicing and repair activities.

g. Illumination - Workstation illumination shall be adequate for all anticipated tasks. Workstation illumination shall conform to paragraph 5.8.2 and Table XXI of MIL-STD-1472C.

(Refer to Paragraph 9.2.2.2.1, Workstation Illumination Design Requirements, for specific values.)

9.3 CONTROLS

9.3.3 Control Design Requirements

9.3.3.1 General Requirements

a. Standardization - Controls shall be standardized to the maximum extent practical.

b. Multi-g Controls - Controls to be used under prolonged or transitory acceleration forces above 2 g's shall be designed to accommodate the crewmember's altered physical abilities.

(Refer to Paragraph 9.2.3.2.4c, Multi-g Control Placement, for additional information.)

c. Microgravity Controls - Crew restraints shall be provided for use at all microgravity workstations.

d. Detent Controls - Detent controls shall be selected over continuous controls whenever the operational_mode requires control operation in discrete steps.

e. Stops - Stops shall be provided at the beginning and end of the range of control positions if the control is not required to be operated beyond the indicated end positions or specified limits.

f. Load Limit - Controls shall withstand the crew-imposed limit loads given in Figure 9.3.3.1-1 as a minimum.

g. Blind Operation - Where "blind" operation (i.e., actuation without visual observation) is necessary, the controls shall be shape coded or separated from adjacent controls by at least 13 cm (5 in.).

(Refer to Section 9.2.3.2, Control/Display Placement and Integration - Design Requirements, for additional information.)

h. High-Force Controls - In general, controls requiring operator forces exceeding the strength limits of the lowest segment of the expected user population shall not be used. High-force controls shall only be used when the operator's nominal working position and/or restraint system provides proper support.

Item	Type of Load	Design limit load	Direction of load
Levers, handles, operating wheels	Push or pull concentrated on most extreme tip or edge	220 N (49.46 lbf)	Any direction
Small knobs	Torsion	15 Nm (11 ft-lb)	Either direction

Figure 9.3.3.1-1 Maximum Crew-Induced Design Limit Loads (Controls)

MSIS 233

i. Miniature Controls:

1. Miniature controls (e.g., DIP switches) shall be used only when severe space limitation exists and use by a suited crewmember is not required.

2. Miniature controls shall be avoided when frequent access to controls is required.

3. The movements of miniature controls shall be similar to those of standard controls.

   (Refer to Paragraph 9.2.3.2.8, Control/Display Movement Compatibility - Design Requirements, and Paragraph 9.2.3.2.9, Control/Display Movement Ratio - Design Requirements, for information on standard controls.)

4. The actuation of miniature controls shall be made as easy as possible without subjecting them to accidental actuation.

9.3.3.2 Accidental Actuation Design Requirements

a. Design and Location - Controls shall be designed and located so as to minimize susceptibility to being moved accidentally. Particular attention shall be given to critical controls whose inadvertent operation might cause damage to equipment, injury to personnel, or degradation of system functions.

b. Protective Methods - Adequate protection shall be provided for controls that are susceptible to accidental actuation.

c. Noninterference - Protection devices shall not interfere with the normal operation of controls or the reading of associated displays.

d. High-Traffic Areas - Critical controls shall not be located in high-traffic paths or translation paths. If controls must be placed in these locations, means shall be used to prevent inadvertent actuation (i.e., pull to unlatch toggle switches).

e. Dead-Man Controls - Where appropriate, controls, which result in system shutdown to a noncritical operating state when force is removed, shall be utilized where operator incapacity can produce a critical system condition.

f. Barrier Guards:

1. Barrier guard spacing requirements for use with toggle switches, rotary switches, and thumbwheels is shown in Figure 9.2.3.2.1-1.

   (For gloved operation, refer to Paragraph 14.4.3.2, EVA Control and Display Design Requirements.)

2. Accidental actuation of controls can result when crewmembers use barrier guards as handholds. Barrier guards shall be designed and located so as to minimize this problem.

g. Rotary Switch Protection - Rotary switches that control critical experiment or vehicle functions shall be recessed or have barrier guards. Dimensions are shown in Figure 9.3.3.2-1.

h. Detachment - Covers and guards shall be designed to prevent accidental detachment during operational periods.

i. Position Indication - When protective covers are used, control position shall be evident without requiring cover removal.

j. Hidden Controls - When hidden controls (i.e., controls that cannot be directly viewed) are required they shall be guarded to prevent inadvertent actuation.

k. Hand Controllers - Hand controllers shall have a separate on/off control to prevent inadvertent actuation when the controller is not in use.

l. Circuit Breaker Protection - When circuit breakers are ganged in a common array, a cover shall be used as an additional security measure to prevent inadvertent actuation or damage.

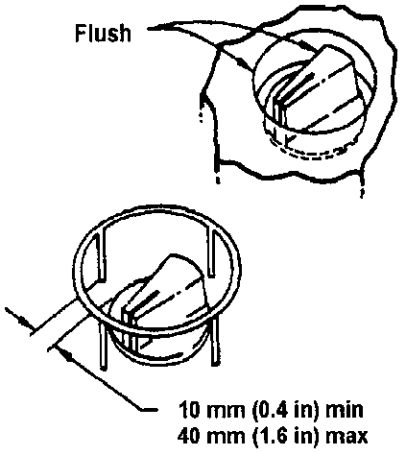

Figure 9.3.3.2-1 Rotary Switch Guard

MSIS 234

9.3.3.3 Control Types Design Requirements

9.3.3.3.1 Knob Design Requirements

a. Discrete Rotary Selection Switches:

1. General:

a) Rotary selector switches shall be used when four or more detented positions are required for discrete functions.

b) Rotary selector switches shall not be used for a two-position function unless ready visual identification of control position is of primary importance, and speed of control operation is not critical, or unless the use of other types of switches is not feasible.

2. Displacement - Up to 12 switch positions may be provided. Standard distance between positions shall be 30 degrees.

3. Knob dimensions - Pointer knobs of the type illustrated in Figure 9.3.3.2-1 are preferred for general use. Dimensions and alternate designs are, in order of preference, described within MIL-K-25049 and MIL-H-8810 (most preferred), MIL-STD-1472, AFSC DH 2-2 and MIL-STD-1348.

4. Separation and arrangement:

a) Rotary selector switches shall be designed with a moving pointer and a fixed scale.

b) The pointer knob shall be mounted sufficiently close to its scale to minimize parallax error between the pointer and the scale markings. When viewed from the normal operator's position, the parallax error shall not exceed 25% of the distance between scale markings.

c) Switch design and scale placement shall be such that there is no reasonable possibility of confusing the pointer-end and nonpointer-end of a knob.

5. Resistance - Switch resistance shall be elastic, building up, then decreasing as each position is approached, so that the control snaps into position without stopping between adjacent positions. The torque required to turn the switch from one detent position to another shall be no less than 9 N-cm (12 in. oz) at breakout and no more than 70 N-cm (100 in. oz) just prior to dropping into the next detent position.

6. Direction of movement - The order of positions shall be such that clockwise movement indicates "on" ascending order, increased performance, etc.

(Refer to Paragraph 9.2.3.2.8, Control/Display Movement Compatibility - Design Requirements, for additional information of control movement.)

b. Continuous Rotary Control Knobs:

1. General:

a) Continuous rotary control knobs (e.g., rheostats, potentiometers) shall be used for precise adjustment of system parameters.

b) Continuous controls may be either single-turn or multiturn.

2. Displacement - Single-turn controls shall have a preferred standard deflection of 240 degrees, between limits located at the 8 o'clock and 4 o'clock positions.

3. Resistance - The torque required to reposition the knob shaft shall be 6 to 25 N-cm (8 to 36 in. oz).

c. Ganged Control Knobs:

1. Use - Use of ganged control knobs shall be limited to two-knob assemblies where possible. Three-knob assemblies shall be avoided.

2. Limitations - Ganged knob configuration shall not be used under the following conditions.

a) Extremely accurate or rapid operations are required.

b) Frequent changes are necessary.

c) Heavy gloves may be worn by the operator.

3. Dimensions, torque and separation - Dimensions, torque and separation of ganged control knobs shall conform to Figure 9.3.3.3.1-1.

4. Serration of ganged control knobs:

a) Knobs shall be serrated.

b) Fine serrations shall be used on precise adjustment knobs.

c) Coarse serrations shall be used on gross adjustment knobs.

5. Marking of ganged control knobs:

a) An indexing mark or pointer shall be provided on each knob.

b) Marks or pointers shall differ sufficiently to make it apparent which knob indexing mark is being observed.

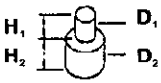

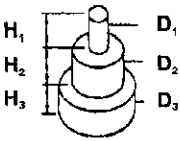

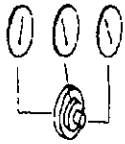

Ganged knob/display association

	Dimensions									
	Two knob assembly				Three knob assembly					
	H_1	H_2	D_1	D_2	H_1	H_2	H_3	D_1	D_2	D_3
Minimum	16 mm (5/8 in)	13 mm (½ in)	13 mm (½ in)	22 mm (7/8 in)	19 mm (¾ in)	19 mm (¾ in)	6 mm (1/4 in)	13 mm (½ in)	44 mm (1¾ in)	75 mm (3 in)
Maximum				100 mm (4 in)						100 mm (4 in)

	Torque		Separation	
	To and including 25 mm (1 in) diameter knobs	Greater than 25 mm (1 in) diameter knobs	One hand individually Bare	Two hands simultaneously Bare
Minimum			25 mm (1 in)	50 mm (2 in)
Optimum			50 mm (2 in)	75 mm (3 in)
Maximum	32 mN-m (4½ in-oz)	42 mN-m (6 in-oz)		

Figure 9.3.3.3.1-1 Ganged Control Knobs

MSIS 235

6. Knob/display relationship - When each knob of a ganged assembly must be related to an array of visual displays, the knob closest to the panel shall relate to the left most display in a horizontal array, or the uppermost display in a vertical array (see Figure 9.3.3.3.1-1).

7. Inadvertent operation - When it is critical to prevent inadvertent actuation of one knob as the other is being adjusted, a secondary knob control movement shall be required (e.g., pressing the top knob before it can be engaged with its control shaft).

9.3.3.3.2 Thumbwheel Control Design Requirements

a. Discrete Position Thumbwheels :

1. Discrete position thumbwheels shall have 10 or fewer detent positions.

2. The standard distance between positions shall be 36 °.

3. Maximum deflection shall be 360 ° or less if 10 or fewer positions are required.

4. Each position around the circumference of a discrete thumbwheel shall have a slightly concave surface or shall be separated by a high-friction (e.g., knurled) area that is raised from the periphery of the thumbwheel.

5. Resistance shall be elastic, building up and then decreasing as each detent is approached so that the control snaps into position without stopping between adjacent detents. The resistance of discrete thumbwheel controls to movement shall be between 11 and 34 N-cm (16 to 48 in. oz).

6. Movement of the thumbwheel forward, up, or to the right shall produce an increase in the setting value.

b. Continuous Types Thumbwheels:

1. Continuous type thumbwheels shall have a standard deflection of 300°.

2. Hard stops shall be provided to limit the maximum travel of continuous thumbwheels.

3. Continuous thumbwheels shall employ high-friction raised areas to facilitate movement.

4. The resistance of continuous thumbwheel controls to movement shall be between 1 and 4 N-cm (2 and 6 in. oz.).

5. Movement of the thumbwheel forward, up, or to the right shall produce an increase in the setting value.

c. Coding:

1. Thumbwheel controls shall be coded by location, labeling, or color (e.g., reversing the colors of the least significant digit wheel as on typical odometers).

2. Where used as input devices, thumbwheel switch OFF or NORMAL positions shall be color coded to permit a visual check that the digits have been reset to these positions (if applicable).

9.3.3.3.3 Valve Control Design Requirements

a. Low-Torque Valves - Valves requiring 1 N-m (10 in-lb) or less for operation are classified as "low torque" valves and shall be provided with a handle, 5.5 cm (2.25 in.) or less in diameter, (see "d" below).

b. Intermediate-Torque Valves - Valves requiring between 1 and 2 N-m (10 and 20 in-lb) for operation are classified as "intermediate torque" valves and shall be provided with a "central pivot" type handle 5.5 cm (2.25in.) or greater in diameter, or a "level (end pivot) type) handle, 7.5 cm (3 in.) or greater in length (the exact size shall be determined by the particular application).

c. High-Torque Valves - Valves requiring 2 N-m (20 in-lb) or more for operation are classified as "high torque" valves and shall be provided with handles greater than 7.5 cm (3 in.) in length.

d. Handle Dimensions:

1. Valve handles shall approximate the configuration illustrated in Figures 9.3.3.3.3-1 and 9.3.3.3.3-2.

2. Handles shall be contoured and finished so as to permit ease of operation.

3. Circular handles, when used, shall have crowns or shall employ concave areas or convex projections along the periphery of the handle.

e. Direction of Operation - Rotary valve controls shall open the valve with a counterclockwise motion.

9.3.3.3.4 Crank Design Requirements

a. Dynamics:

1. Where cranks are used for tuning or other processes involving numerical selection, each rotation shall correspond to a multiple of 1, 10, 100, etc.

2. The gear ratio and dynamic characteristics of such cranks shall allow precise placement of the follower (e.g., crosshairs) without overshooting or undershooting and successive corrective movements.

b. Grip Handle - The crank grip handle shall be designed so that it turns freely around its shaft.

c. Dimensions, Resistance, and Separation - Dimensions, resistance, and separation between adjacent swept circular areas of cranks shall conform to the criteria of Figure 9.3.3.3.4-1.

d. Folding Handle - If a crank handle could become a hazard to persons passing by, or it is critical that the handle not be inadvertently displaced by being accidentally bumped, a folding handle type control shall be used. Such a control shall be designed so that the handle is firmly held in the extended position when in use and folded when not in use.

9.3.3.3.5 Handwheel Design Requirements

a. Restraints - When designed for use in microgravity, adequate restraints shall be provided for the operator.

b. Turning Aids - Knurling, indentation, high-friction covering, or a combination of these shall be built into the handwheel to facilitate operator grasp for applying maximum torque and to reduce the possibility of the wheel being jerked from the operator's hands.

c. Spinner Handles - For applications where the wheel may be rotated rapidly through several revolutions, a spinner handle may be added. Such handles shall not be used, however, if the projecting handle is vulnerable to inadvertent displacement of a critical wheel setting or if it creates a safety hazard.

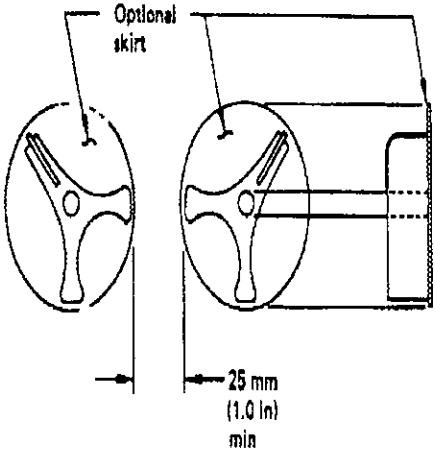

Figure 9.3.3.3.3-1 Valve Handle- Central Pivot Type

MSIS 236

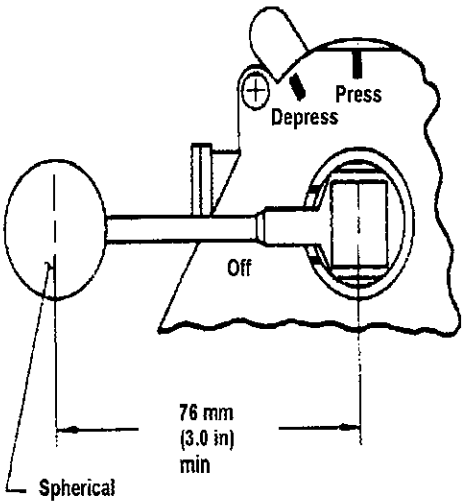

Figure 9.3.3.3.3-2 Valve Handle- Lever Type

MSIS 237

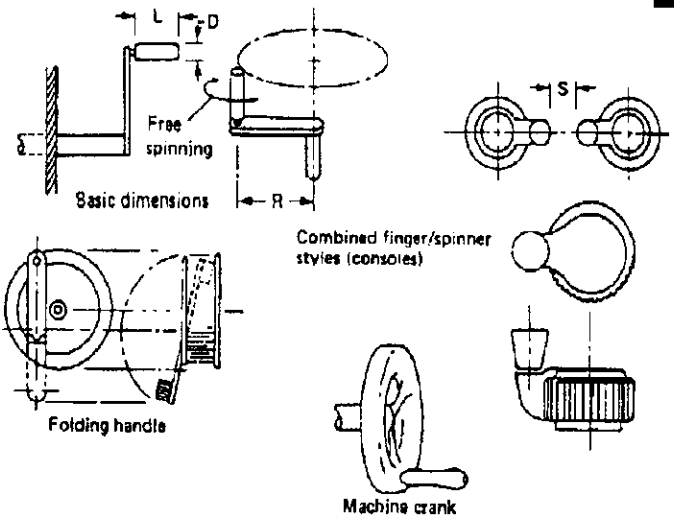

Load	Specification	Handle				R, Turning radius			
		L, Length		D, Diameter		Rate below 100 RPM		Rate above 100 RPM	
		mm	in	mm	in	mm	in	mm	in
Light loads Less than 22 N (5 lb) (wrist and finger movement)	Minimum	25	1	10	3/8	38	1-1/2	13	1/2
	Preferred	38	1-1/2	13	1/2	75	3	85	2-1/2
	Maximum	75	3	16	5/8	125	5	115	4-1/2
Heavy loads More than 22 N (5 lb) (arm movement)	Minimum	75	3	25	1	190	7-1/2	125	5
	Preferred	95	3-3/4	25	1	--	--	--	--
	Maximum	--	--	38	1 1/2	510	20	230	9

S=Separation between adjacent controls: 75 mm (3 in) minimum

MSIS 238 **Figure 9.3.3.3.4-1 Cranks**

9.3.3.3.6 Lever Design Requirements

Requirements for the design of levers are provided below.

a. Coding - When several levers are grouped in proximity to each other, the lever handles shall be coded.

   (Refer to Paragraph 9.5.3.2, Coding Design Requirements, for additional information.)

b. Length - The length of levers shall be determined by the mechanical advantage needed.

9.3.3.3.7 Toggle Switch Design Requirements

a. Dimensions - Dimensions for a standard toggle switch shall conform to the values presented in Figure 9.3.3.3.7-1.

b. Indication of Actuation:

   1. An indication of control actuation shall be provided (e.g., snap feel, audible click, associated or integral light).

   2. Switch design shall preclude stoppage between positions.

   3. Visual verification of switch position shall be obtainable at a glance from any viewing angle.

c. Operating Force:

1. Operating force shall be in the range of 3 to 30 N (0.63 to 6.25 lbf).

   2. The selected force value shall be dependent upon the specific application (e.g., high-force switches are especially suited for applications where positive-feel is important).

   3. For lever-lock (pull-to-unlock) toggle switches, resistance of lift-to-unlock mechanisms shall not exceed 13 N (3 lbf).

d. Orientation - The preferred direction of toggle switch operation shall be vertical. Horizontal actuation of toggle switches shall be employed only for compatibility with the controlled function or equipment location.

e. Position Designation - Switch actuation shall control the system or subsystem functions as indicated in Figure 9.3.3.3.7-2.

f. Off Position - Where a third position is added for off, the off mode shall be located in the center position, except where this would compromise equipment performance. In this case, off shall be in the bottom position.

9.3.3.3.8 Pushbutton Design Requirements

(Refer to Paragraph 9.3.3.3.15, Legend Switch Design Requirements, and 9.3.3.4, Computer Input Devices, for additional information on pushbutton devices.)

a. Activation:

   1. Latching Pushbutton (push-on, lock-on). Activation shall be indicated by a sudden drop in resistance and, if possible, an audible click.

   2. Momentary Pushbutton (push-on, release-off) - Activation shall be indicated by positive feedback.

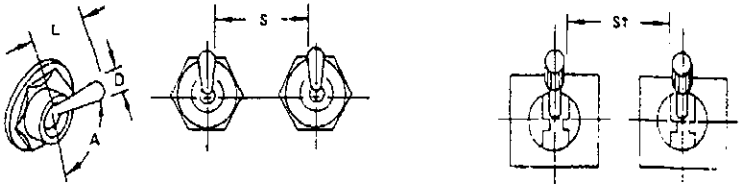

	Dimensions		Resistance	
	L Arm length	D Control tip	Small switch	Large switch
Minimum	13 mm (1/2 in)	3mm (1/8 in)	2.8 N (10 oz)	2.8 N (10 oz)
Maximum	50 mm (2 in)	25 mm (1 in)	4.5 N (16 oz)	11 N (40 oz)

	Displacement between positions	
	2 Position	3 Position
Minimum	30°	17°
Maximum	80°	40°
Desired		25°

	Separation			
	Single finger operation		S Single finger sequential operation	Simultaneous operation by different fingers
		†		
Minimum	19 mm (3/4 in)	25 mm (1 in)	13 mm (1/2 in)	16 mm (5/8 in)
Optimum	50 mm (2 in)	50 mm (2 in)	25 mm (1 in)	19 mm (3/4 in)

† Using a lever lock toggle switch

Figure 9.3.3.3.7-1 Toggle Switches

MSIS 239

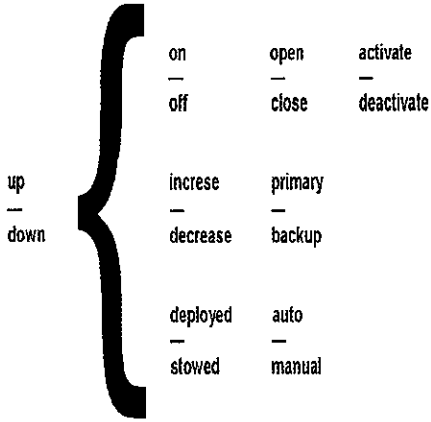

Figure 9.3.3.3.7-2 Toggle Switch Position Designation

MSIS 240

3. Alternate Action Pushbutton (push-on, push-off) - Activation shall be indicated by a sudden drop in resistance, an auditory click, and an associated display action.

4. Touch Sensitive (nonmechanical) - Activation shall be indicated by positive feedback.

b. Resistance - The resistance of pushbuttons to movement shall be 2.78 to 23.63 N (10 to 85 oz). The nominal force-resistance value shall be determined by the particular application and the environment in which it is operated.

c. Dimension:

1. The standard shape of pushbuttons shall be rectangular.

2. Round pushbuttons shall be used when dictated by special functional or hardware considerations.

3. When a pushbutton surface is not concave, the surface shall provide a high degree of frictional resistance to prevent slipping.

4. T he height and width (or diameter, as applicable) of pushbuttons shall be 2 cm (0.75 in.) minimum and 4 cm (1.50 in.) maximum.

5. The illuminated area of pushbutton signal lights shall not be less than 3 cm^2 (0.40 $in.^2$) and not greater than *10 cm^2 (1.5 $in.^2$).*

d. Displacement:

1. Momentary pushbuttons shall have a total displacement of 0.32 to 1.84 cm (0.125 to 0.725 in.).

2. Latching pushbuttons shall have a total displacement of 0.64 to 1.84 cm (0.250 to 0.725 in.).

3. Alternate action pushbuttons shall have a displacement of 0.32 to 1.84 cm (0.125 to 0.725 in.).

4. Pre-travel shall be 0.32 to 1.52 cm (0.125 to 0.6 in.).

5. Over-travel shall be 0.32 cm (0.125 in.) maximum.

9.3.3.3.9 Foot-Operated Switch Design Requirements

a. Use:

1. Foot-operated switches shall be used only where the crewmember is likely to have both hands occupied when switch activation may be required, or when load sharing among limbs is desirable.

2. Because foot-operated switches are susceptible to accidental activation, their uses shall be limited to noncritical or infrequent operations such as press-to-talk communication.

3. Foot-operated switches shall be compatible with the restraint system being employed.

b. Operation:

1. Foot-operated switches shall be positioned for operation by the toe and the ball of the foot rather than by the heel.

2. Foot-operated switches shall not be located so near an obstruction that the crewmember cannot center the ball of the foot on the switch button.

3. A pedal may be used over the button to aid in location and operation of the switch.

4. Foot-operated switches shall be compatible with crewmember footwear.

c. Feedback - A positive indication of control activation shall be provided (e.g., snap feel, audible click, associated visual display).

9.3.3.3.10 Pedal Design Requirements

a. Control Return:

1. Except for controls that generate a continuous output (e.g., rudder controls), pedals shall return to the original null position without requiring assistance from the crewmember (e.g., brake pedal).

2. For pedals in which the operator may normally rest the foot on the control between operations, sufficient resistance shall be provided to prevent inadvertent activation of the control (e.g., accelerator pedal).

b. Pedal Travel Path - The travel path shall be compatible with the natural articulation path of the operator's limbs (i.e., thigh, knee, ankle) for the gravity condition under which the control will be used.

c. Nonslip Pedal Surface - Pedals shall be provided with a nonslip surface.

9.3.3.3.11 Rocker Switch Design Requirements

a. Positive Indication - An indication of control activation shall be provided (e.g., snap feel, audible click, associated or integral light).

b. Dimensions, Resistance, Displacement, and Separation - Dimensions, resistance, displacement, and separation between centers of rocker switches shall conform to the criteria in Figure 9.3.3.3.11-1. Resistance shall gradually increase, then drop when the switch snaps into position. The switch shall not be capable of being stopped between positions.

c. Orientation:

1. Where practicable, rocker switches shall be vertically oriented.

2. Activation of the upper wing of a rocker switch shall turn the equipment or component on, cause the quantity to increase, or cause the equipment or component to move forward, clockwise, to the right, or up.

3. Horizontal orientation of rocker switches shall be employed only for compatibility with the controlled function or equipment location.

9.3.3.3.12 Push-Pull Control Design Requirements

a. Handle Dimensions, Displacement, and Clearances - Handle dimensions, displacement, and clearances for push-pull control handles shall conform to criteria in Figure 9.3.3.3.12-1.

b. Rotation:

1. Except for combination push-pull/rotate switch configurations, push-pull control handles shall be keyed to a nonrotating shaft.

2. When the control system provides a combination push-pull/rotate functional operation using a round style knob, the rim of the knob shall be serrated to denote (visually and tactually) that the knob can be rotated, and to facilitate a slip-free finger grip.

c. Detents - Mechanical detents shall be incorporated into push-pull controls to provide tactile indication of positions.

d. Action of push-pull controls shall be:

1. Pull towards the operator for ON or activation; push away for OFF or deactivation.

2. Clockwise for activation or increasing function of combination pull/rotary switches.

Resistance - Force for pulling a panel control with fingers shall be not more than 18 N (4 lb), for pulling a T-bar with four fingers shall be not more than 45 N (10 lb).

9.3.3.3.13 Circuit Breaker Design Requirements

a. General:

1. Circuit breakers shall be used for functions that require automatic protection against excessive electrical currents.

2. Circuit breakers shall be resettable.

3. Except for special cases, circuit breakers shall be of the plunger type (pull-to-release, push-to-reset).

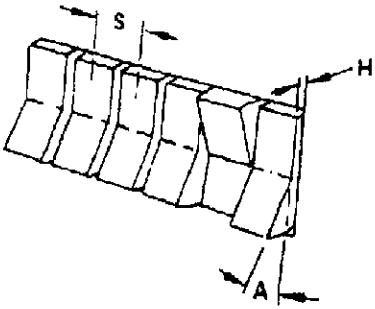

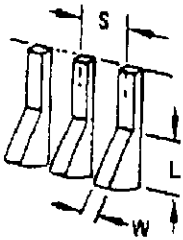

	Dimensions		Resistance
	W, Width	L, Length	
Minimum	6 mm (1/4 in)	13 mm (1/2 in)	2.8 N (10 oz)
Maximum			11 N (40 oz)

	Displacement		Separation (center-to-center)
	H, Ht, Depressed	A, Angle	S (bare hand)
Minimum	3 mm (1/8 in)	30^0	19 mm (3/4in)

Figure 9.3.3.3.11-1 Rocker Switches

MSIS 241

Configuration Example	Application Criteria	Design Criteria: Dimensions			Design Criteria: Displacement	Separation
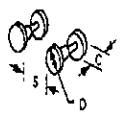	Push-pull control, low resistance, for two position mechanical and/or electrical systems. Alternate three position plus rotary function acceptable for applications such as vehicle headlights plus parking lights, panel and dome lights provide serrated rim.	D, min dia 19 mm (3/4 in)	C, min clearance 25 mm (1 in) Add 13 mm (1/2 in) for gloved hand		25 ± 13 mm (1 ± 1/2 in) min between pull positions 13 mm (1/2 in)	S, min space between 38 mm (1 1/2 in) Add 13 mm (1/2 in) for gloved hand
	Alternate handle; miniature electrical panel switch only. Avoid glove use application.	D, min dia 6 mm (1/4 in)	N/A	L min length 19 mm (3/4 in)	Minimum 13 mm (1/2 in)	S, min space between 25 mm (1 in)
	High-force push-pull, for two-position mechanical system only.	W, min width 100 mm (4 in)	D, depth 16-38 mm (5/8-1 1/2 in)	C, min clearance 38 mm (1 1/2 in) Add 6 mm (1/4 in) for gloved hand	Minimum 25 mm (1 in) Preferred 50 mm (2 in)	S, min space between 13 mm (1/2 in)
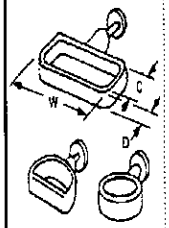	Same as above. Preferred where possible garment or cable-snag possibility exists. Note: 1 and 2 finger pulls also acceptable for less than 18 N (4 lb) applications.	W, min width 100 mm (4 in) Add 25 mm (1 in) for gloves	D, depth 16-38 mm (5/8-1 1/2 in)	C, min clearance 32 mm (1 1/2 in)	Minimum 25 mm (1 in) Preferred 50 mm (2 in)	

Figure 9.3.3.12-1 Push-Pull Controls

MSIS 242

4. All tripped conditions shall be visually indicated.

Dimensions - Preferred dimensions for handles of plunger and switch type circuit breakers are illustrated in Figure 9.3.3.3.13-1.

c. Separation and Arrangement - An edge-to-edge distance of 2.5 cm (1.0 in.) nominal, 1 cm (0.5 in.) minimum, shall exist between circuit breakers grouped in horizontal rows, which is the preferred arrangement. The distance between rows shall be a minimum of 2.5 cm (1.0 in.).

d. Displacement:

1. The tripped condition of the plunger-type circuit breaker shall be indicated by a white or silver band. When the circuit breaker is closed the band shall not be visible (see Figure 9.3.3.3.13-1).

2. The "off" or tripped condition of the switch type circuit breaker shall be indicated when the handle is in the "down" position (see Figure 9.3.3.3.13-1).

Resistance - The force required to reset a plunger-type circuit breaker shall not exceed 53 N (12 lb). The force required to manually trip a plunger type circuit breaker shall not exceed 35 N (8 lb).

9.3.3.3.14 Slide Switch Control Design Requirements

a. Dimensions, Resistance, and Separation:

1. Dimensions, resistance, and separation of slide switch handles shall conform to criteria in Figure 9.3.3.3.14-1.

2. Detents shall be provided for discrete control settings. Resistance shall gradually increase, then drop when the switch snaps into position.

3. The discrete control slide switch shall not be capable of stopping between positions.

b. Orientation - Where practical, slide switches shall be vertically oriented. Horizontal orientation or actuation of slide switches shall be employed only when necessary for compatibility with a controlled function or equipment location.

c. Positive Indication - Slide-switch controls that are analog or involve more than two discrete positions shall be designed to provide positive indication of control setting, preferably a pointer located on the left side of the slide handle.

d. Switch Action - Moving the slide up or away from the operator shall result in turning the equipment or component on, causing a quantity to increase, or causing the equipment or component to move forward, clockwise, to the right, or up.

9.3.3.3.15 Legend Switch Design Requirements

(Refer to Paragraph 9.3.3.3.8, Pushbutton Design Requirements, for related information.)

a. Dimensions, Resistance, Displacement, and Separation - Dimensions, resistance, displacement, and separation between adjacent edges of legend switches shall conform to the criteria in Figure 9.3.3.3.15-1.

b. Barrier Height - Barrier height from panel surface shall conform to the criteria in Figure 9.3.3.3.15-1. Unless otherwise specified, barriers are required on critical switches and on switches likely to be inadvertently actuated. Barriers, when used, shall not obscure visual access to controls, labels or displays.

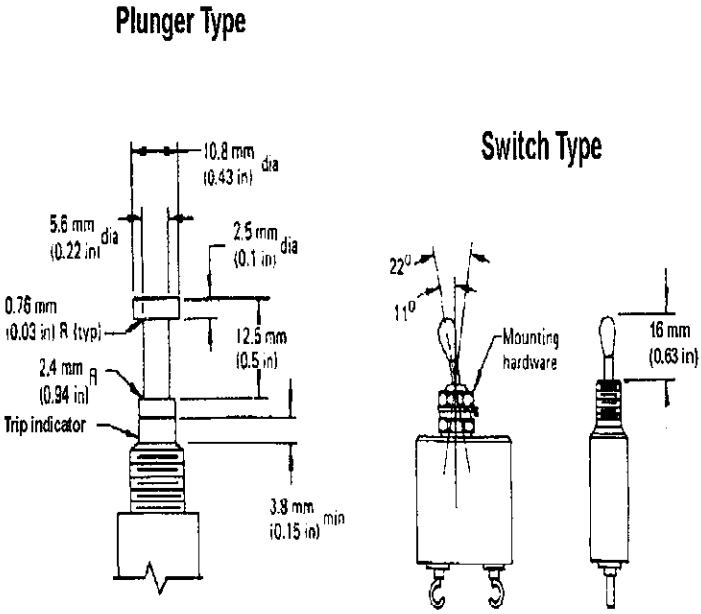

Figure 9.3.3.3.13-1 Circuit Breakers

MSIS 243

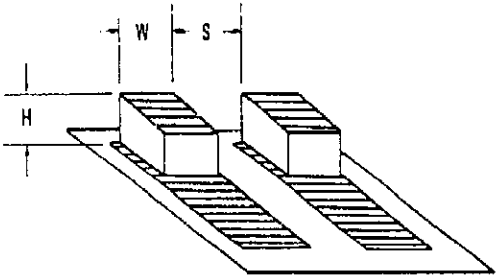

	Dimensions		Resistance	
	H Actuator height	W Actuator width	Small switch	Large switch
Minimum	6 mm (1/4 in)	6 mm (1/8 in)	2.8 N (10 oz)	2.8 N (10 oz)
Maximum	–	25 mm (1 in)	4.5 N (16 oz)	11 N (40 oz)

	Separation, S		
	Single finger operation	Single finger sequential operation	Simultaneous operation by different fingers
Minimum	19 mm (3/4 in)	13 mm (1/2 in)	16 mm (5/8 in)
Optimum	50 mm (2 in)	25 mm (1 in)	19 mm (3/4 in)

Figure 9.3.3.3.14-1 Slide Switches

MSIS 244

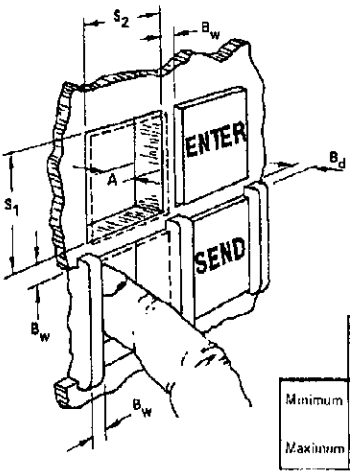

	S_1, S_2 Size	A Displacement	Barriers		Resistance
			B_w	B_d	
Minimum	19 mm* (3/4 in)	3 mm** (1/8 in)	3 mm (1/8 in)	5 mm (3/16 in)	2.8 N*** (10 oz)
Maximum	38 mm (1-1/2 in)	6 mm (1/4 in)	6 mm (1/4 in)	6 mm (1/4 in)	16.7N (60 oz)

Notes:

* 15 mm (5/8 in) where switch is not depressed below the panel

** 5 mm (3/16 in) for positive position switches

*** 5.6 N (20 oz) for use in moving vehicles

Figure 9.3.3.3.15-1 Legend Switches

MSIS 245

c. Other Requirements:

1. For positive indication of switch activation, the legend switch shall be provided with a detent or click. When touch sensitive switches are used, a positive indication of activation shall be provided, (e.g., an integral light within or above the switch being activated).

2. The legend shall be legible with or without internal illumination.

3. A lamp test or dual lamp/filament reliability shall be provided for switches if the mean time between failure (MTBF) is less than 100,000 hours.

4. Lamps within the legend switch shall be replaceable from the front of the panel by hand and the legends or covers shall be keyed to prevent the possibility of interchanging the legend covers. The pushbuttons shall not be susceptible to inadvertent activation during this lamp removal or replacement process.

5. There shall be a maximum of three lines of lettering on the legend plate.

9.3.3.3.16 Printed Circuit (DIP) Switches Design Requirements

a. Use - The use of DIP switches shall be limited to nonroutine maintenance or troubleshooting applications.

b. Dimensions, Resistance, Displacement and Separation - Dimensions, resistance, displacement, and separation between adjacent DIP switch actuators shall conform to the following:

1. Dimensions of actuator shall be sufficiently high to permit error-free manipulation by the operator when using some commonly available stylus (e.g., pencil or pen). The design of the actuators shall not require the use of a special tool for manipulation.

2. Actuator resistance shall be sufficiently high to avoid inadvertent activation under expected use conditions. Resistance shall gradually increase, then drop when the actuator snaps into position. The actuator shall not be capable of stopping between positions.

3. When actuators are slide type, they have sufficient travel (displacement) to permit easy recognition of switch settings. At a minimum, the travel shall be twice the length of the actuator. When actuators are rocker type, the actuated wing shall be flush with the surface of the panel.

4. Actuators shall have sufficient separation to permit error-free manipulation by the operator (i.e., the stylus cannot inadvertently contact adjacent actuators).

c. Shape - The surface of the actuator shall be indented to accept the point of the stylus. The indentation shall be sufficiently deep to avoid slippage of the stylus during manipulation.

9.3.3.3.17 Key-Operated Switch Design Requirements

Key operated controls should be used when system requirements dictate that the function being controlled should be secured against activation by unauthorized personnel. If key operated controls cannot be justified in terms of security, they are probably not necessary and should not be used. Key operated switches should not be used solely as a means of shape coding.

9.3.3.4 Computer Input Devices

9.3.3.4.1 Keyboard Design Requirements

9.3.3.4.1.1 Layout

9.3.3.4.1.2 General

a. Keyboards design commonality - There shall be a single design for a keyboard, particularly in relation to the location of keys, and it shall be used throughout the space module.

b. Control switches - All commonly used controls associated with keyboard functioning (e.g., on/off) shall be readily accessible to the user. Both the control and its labeling shall be visible to the user.

c. Key markings - The key labels shall be placed on the keys in such a way as to be resistant to wear and abrasion. If the label cannot be placed on the key, it shall be placed above it.

d. Finger placement aids - The standard keyboards and the shall be distinguishable to the touch to facilitate the correct placement of the fingers for touch typists.

e. Microgravity placement - For microgravity operating conditions, the keyboard placement shall be compatible with the neutral body posture and the restraint system being employed.

f. Operating force - The preferred operating force of a terminal keyboard shall be 0.5 N (1.75 oz).

g. Key displacement - The recommended key displacement for activation is approximately 2.0 mm (0.08 in.) with bottoming-out occurring at about 4.0 mm (0.16 in.).

h. Feedback:

1) The screen shall provide visual feedback each time a key is activated.

2) Auditory feedback indicating key activation shall be provided. User shall have the option of deactivating this feedback.

3) Kinesthetic feedback in the form of a distinct when keys are maximally depressed.

i. Keyboard interlock - A keyboard interlock shall exist to prevent the outputs from two or more simultaneously depressed keys from either jamming the print mechanism or outputting an invalid keycode.

j. Size and shape of keys - The shape of keys shall:

1) Aid the accurate location of the user's fingers.

2) Minimize reflections.

3) Provide a suitable surface for the key legends.

4) Be neither sharp nor uncomfortable to press.

5) Have a dished profile curvature for improved keyboarding accuracy.

k. Key legend - The key legends shall be explicit and easy to understand. Alphanumeric legends shall not be smaller than 3.0 mm (0.12 in.).

l. Color and reflection of keys :

1) The surface of keys shall have a matte finish to reduce glare.

2) For standard keys, the primary color shall be neutral, e.g., beige or gray, rather than a color that has a high reflectance like white.

m. Function key labels - Function keys shall be labeled with standard function symbols, the function title, function title abbreviations, or function codes, in that order of preference.

n. Key Repeat - The capability of repeating characters or symbols continuously shall be provided. Keys shall be provided that automatically repeat when continually depressed for more than 0.5 seconds.

o. Key spacing - The spacing of keys shall be as indicated in Figure 9.3.3.4.1.2-1.

p. Noise Level - The "click" feedback of a keystroke shall be able to be turned off by the user on all keyboards, and preferably, also be adjustable to different volumes.

9.3.3.4.2 Joysticks Design Requirements

a. Isotonic Joystick:

1. Movement shall be smooth in all directions, and rapid positioning of a follower on a display shall be attainable without noticeable backlash, cross-coupling, or the need for multiple corrective movements.

2. Control ratios, frictions, and inertia shall meet the dual requirements of rapid gross positioning and precise fine positioning.

3. When used to create free-drawn graphics, the refresh rate for the follower on the VDT shall be sufficiently high to ensure the appearance of a continuous track.

4. The delay between control movement and the confirming display response shall not exceed 0.1 second.

5. Dimensions, resistance, and clearance shall conform to criteria in Figure 9.3.3.4.2-1.

6. The joystick shall be placed so as not to interfere with other controls.

7. Joystick placement shall allow effective operation when the operator is using the restraint system provided and maintaining an optimum viewing position with respect to the VDT.

b. Isometric Joystick

1. The output shall be proportional to the magnitude of the applied force as perceived by the operator.

2. The isometric joystick shall deflect minimally in response to applied force, but may deflect perceptibly against a stop at full applied force.

3. Isometric joysticks shall be used only when the primary feedback is not kinesthetic, but of some other form (e.g., visual).

9.3.3.4.3 Light Pen Design Requirements

a. Activating Device:

1. Light pens shall be equipped with an activating device. If the activating device is a pushbutton switch located at the tip, the force required shall be from 0.6 N to 1.4 N (2 to 5 oz).

2. Feedback shall be provided when the activating device is operated.

b. Position Indication - The computer software for light pens shall display a cursor under the light pen position. The cursor shall be large enough to be seen under the point of the light pen and shall move with the light pen.

c. Feedback - Light pens shall provide some indication that input has been received by the system.

d. Dimensions - Light pens shall be between 11.9 and 18.0 cm (4.7 and 7.1 in.) long and 0.8 and 2.0 cm (0.3 and 0.8 in.) in diameter.

	Dimensions	Resistance		
	Key width Bare-handed	Numeric	Alpha-numeric	Dual function
Minimum	10 mm (0.385 in.)	1 N (3.5 oz)	250 mN (0.9 oz)	250 mN (0.9 oz)
Maximum	19 mm (0.75 in.)	4 N (14.0 oz)	1.5 N (5.3 oz)	1.5 N (5.3 oz)
Preferred	13 mm (0.5 in.)			

	Displacement			Seperation
	Numeric	Alpha-numeric	Dual function	(between adjacent key tops)
Minimum	0.8 mm (0.03 in.)	1.3 mm (0.05 in.)	0.8 mm (0.03 in.)	6.4 mm (0.25 in.)
Maximum	4.8 mm (0.19 in.)	6.3 mm (0.25 in.)	4.8 mm (0.19 in.)	
Preferred				6.4 mm (0.25 in.)

Figure 9.3.3.4.1.2-1 Keyboard Dimensions

MSIS 250

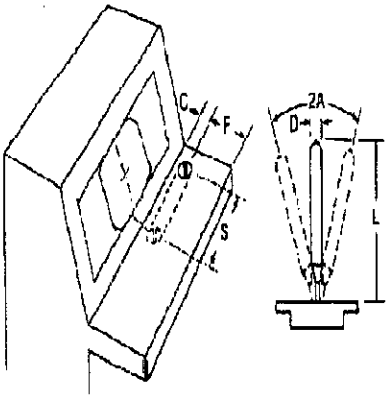

	Dimensions		Resistance	Displacement	Clearance		
	Dia, D	Length, L		A	Display C_L to stick C_LS	Around stick, C	Stick to shelf front, F
Minimum	6.5 mm (0.25 in)	75 mm (3 in)	3.3N (12 oz)		0		120 mm (4.75 in)
Maximum	16 mm (0.62 in)	150 mm (6 in)	8.9 N (32 oz)	45 deg	400 mm (15.75 in)	*	250 mm (9.88 in)

*** Maximum stick excursion plus 100 mm (4 in)**

Figure 9.3.3.4.2-1 Isotonic Joystick

MSIS 251

e. Storage - Light pen storage shall be passive on the part of the user: once released, the cable shall retract automatically to its storage position. During use of the light pen, the tension on the cable shall produce the equivalent of a 1g weight (+/- 20%) of the light pen.

f. Follower Movement - Light pens shall provide a smooth movement of the follower when used as a two-axis controller. The refresh rate for the follower shall be high enough to ensure the appearance of a continuous track whenever it is used to create graphics input.

9.3.3.4.4 Mouse Design Requirements

Design requirements for a mouse control device are provided below.

a. Use - A mouse is best used to select screen position rapidly through movement of the follower and shall be used for zero-order control only (i.e., generation of x and y-outputs by the controller results in proportional displacement of the follower) or rate control (i.e., cursor movement is proportional to rate of mouse movement), selectable by the user.

b. Operator Accuracy - The mouse shall be designed and placed on the maneuvering surface to allow the operator to orient it consistently to within +/- 10° of the correct orientation without visual observation. For example, when the operator grasps the mouse in what seems to be the correct orientation and moves it in a straight line along what is assumed to be the y-axis, then the direction of movement of the follower on the VDT shall be between 350° and 10°.

c. Mouse Accuracy - The mouse shall be easily movable in any direction without a change of grip and shall result in smooth movement of the follower in the same direction (+/- 10°).

d. Handedness - The mouse shall be operable with either hand.

e. Lost Cursor Control - The controller shall not drive the follower off the edge of the display.

f. Dimensions and Shape - The mouse shall have no sharp edges with limiting dimensions as indicated in Figure 9.3.3.4.4-1.

	Minimum	Maximum
Width (spanned by thumb to finger grasp)	40 mm (1.6 in)	70 mm (2.8 in)
Length	70 mm (2.8 in)	120 mm (4.7 in)
Thickness	25 mm (1.0 in)	40 mm (1.6 in)

Figure 9.3.3.4.4-1 Mouse Dimensions

MSIS 252

g. Discrete Activation - Where activation switches are required on the mouse they shall be limited to no more than three and the buttons shall be operable with normal grip.

h. Activation Surface - A surface which has a texture suited to mouse use and that is conveniently located shall be provided when a mouse is to be used.

i. Stowage - The mouse shall be removable and/or stowable.

j. Mouse/Keyboard Integration - The system shall be designed so that the user does not have to alternate frequently between the mouse and the keyboard.

9.3.3.4.5 Track Ball (Rolling Ball) Design Requirements

a. Zero-Order Control - A track ball shall be used for zero order control (i.e., a given movement of the ball produces a proportional movement of the follower on the display) or rate control (i.e., cursor movement is proportional to rate of ball movement), selectable by the user.

b. Follower Recapture - The controller shall not drive the follower off the edge of the display.

c. Location - Track ball placement shall allow efficient use of the device by crewmembers using workstation restraints and maintaining optimum view of associated VDT. The track ball shall be operable with either hand.

d. Dimensions, Resistance, and Clearance - Track ball dimensions, resistance, and clearance shall conform to the criteria in Figure 9.3.3.4.5-1.

e. Ball Diameter - The smaller diameter ball controls (Figure 9.3.3.4.5-1) shall be used only where space availability is very limited and when there is no need for precision.

f. Track Ball/Keyboard Integration - The system shall be designed so that the user does not have to alternate frequently between the track ball and the keyboard.

9.3.3.4.6 Stylus and Grid DesignRequirements

a. Input - Movement of the stylus on the grid surface shall result in a smooth movement of the follower in the same direction.

b. Stylus/Grid Correspondence - Discrete placement of the stylus at any point on the grid shall cause the follower to appear at the corresponding coordinates and to remain steady in position provided the stylus is not moved.

c. Refresh Rate - The refresh rate for the follower shall be sufficiently high to ensure the appearance of a continuous track whenever the stylus is used for generation of free-drawn graphics.

d. Remote Grid Size - Remote grids shall approximate the display size whenever possible.

e. Remote Grid Placement - Remote grids shall be at an orientation that maximally preserves the directional relationships between them and the display without violating any anthropometric considerations (e.g., a vertical plane passing through the north/south axis on the grid shall be parallel to the north/south axis on the display).

f. The stylus shall be storable in a retracted position. Retraction shall be activated automatically when the user releases the stylus. During use, tension on the cable shall be equivalent to the 1g weight (+/- 20%) of the stylus.

9.3.3.4.7 Touch-Sensitive Display Design Requirements

a. Touch Area Indication - The touch-sensitive areas of a display shall be indicated..

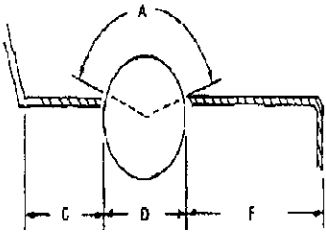

	Dimensions		Resistance		Clearance		
	Diameter, D	Surface Exposure, A	Precision Required	Vibration or Accel Conditions	*	Around Ball, C	Ball to Shelf Front, F
Minimum	50 mm (2 in)	100 deg			0	50 mm (2 in)	120 mm (4.75 in)
Maximum	150 mm (6 in)	140 deg	1.0 N (3.8 oz)	1.7 N (6 oz)	320 mm (12.62 in)		250 mm (9.75 in)
Preferred	100 mm (4 in)	120 deg	0.3 N (1.1 oz)				

*** Lateral distance from display centerline to ball centerline**

Figure 9.3.3.4.5-1 Trackball Design

MSIS 253

b. Touch Area Size - The touch area shall be large enough so that adjacent touch areas are not accidentally activated.

c. Touch-Sensitive-Display/Keyboard Integration - The system shall be designed so that the user does not have to alternate frequently between the touch display and other computer input devices.

d. Feedback - Positive feedback indicating that a touch has been registered shall be provided.

e. Inadvertent Activation - Inadvertent activation of the touch-sensitive device shall be precluded.

9.3.3.4.8 Bar Code Reader Design Requirement

a. Use - Bar code readers (or other computer access devices) shall be used as an interface between (Refer to Section 9.4.3.3 Audio Displays - Design Requirements, for further information.)equipment and associated data base information whenever appropriate (e.g., inventory control, maintenance procedures, etc.).

b. Ease of Use - Bar code readers shall be easy and fast to operate.

c. Orientation Flexibility - Bar code readers shall allow flexibility in the orientation match between the reader and the label to be read that is necessary for successful recognition.

d. Success Rate - Bar code readers shall successfully read the intended labels on a high percentage of passes.

9.3.3.5 Speech Transmission Equipment Design Requirements

a. Frequency - Microphones and associated system-input devices shall be designed to respond optimally to that part of the speech spectrum most essential to intelligibility (i.e., 200 to 6,100 Hz). Where system engineering necessitates speech-transmission bandwidths narrower than 200 to 6,100 Hz, the minimum acceptable frequency range shall be 250 to 4,000 Hz.

b. Dynamic Range - The dynamic range of a microphone used with a selected amplifier shall be great enough to admit variations in signal input of at least 50 dB.

c. Noise-Cancelling Microphones - In very loud, low-frequency noise environments (100 dB overall), noise-cancelling microphones shall be used and shall be capable of effecting an improvement of not less than 10 dB peak speech to root-mean-square-noise ratio as compared with non-noise-cancelling microphones of equivalent transmission characteristics.

d. Pre-emphasis - If necessary, speech system input devices shall employ frequency pre-emphasis with a positive slope frequency characteristic no greater than 18 dB per octave from 140 to 1,500 Hz and no greater than 9 dB per octave over the frequency range 1,500 to 4,800 Hz when no clipping is used.

e. Peak-Clipping of Speech Signals - Where speech signals are to be transmitted over channels showing less than 15 dB peak speech to root-mean-square-noise ratios, peak-clipping of 12 to 20 dB may be employed at system input and may be preceded by frequency pre-emphasis as specified in "d" above.

f. Noise Shields - When the talker is in an intense noise field, the microphone shall be put in a noise shield. Noise shields shall be designed to meet the following requirements.

   1. A volume of at least 250 cm^3 (15.25 in^3) to permit a pressure gradient microphone to function normally.

   2. A good seal against the face with the pressure of the hand or the tension of straps.

3. A hole or combination of holes covering a total area of 65 mm^2 (0.1 in^2) in the shield to prevent pressure buildup.

4. Prevention of a standing wave pattern by shape, or by use of sound-absorbing material.

5. No impediment to voice effort, mouth or jaw movement, or breathing.

g. Speaker/Side Tone - The speaker's verbal input shall be in phase with its reproduction as heard on the headset. This side tone shall not be filtered or modified before it is received in the headset.

9.3.3.6 Operating Controls for Voice Communication Equipment Design Requirements

a. Volume Controls:

1. Accessible volume or gain controls shall be provided for each communication receiving channel (e.g., loudspeakers or headphones) with sufficient electrical power to drive sound pressure level to at least 110 dB overall when using two earphones.

2. The sound pressure level (SPL) shall be maintained within + or - 3 dB when atmospheric pressure changes are encountered within the module.

3. The minimum setting of the volume control shall be limited to an audible level, i.e., it shall not be possible to inadvertently disable the system with the volume control.

(Refer to Paragraph 5.4.3.2.2, Voice Communications Noise Exposure Requirements, for additional information.)

4. Separation of power (on-off) and volume control adjustment functions into separate controls is preferred. However, should conditions justify their combination, a noticeable detent position shall be provided between the OFF position and the lower end of the continuous range of volume adjustment. When combined power and volume controls are used, the OFF position shall be labeled.

b. Squelch Control - Where communication channels are to be continuously monitored, each channel shall be provided with a signal-activated switching device (squelch control) to suppress channel noise during no-signal periods. A manually operated, on-off switch, to deactivate the squelch when receiving weak signals, shall be provided.

9.4.2.3 Visual Display Design Requirements

9.4.2.3.1 Display Readability Design Requirements

9.4.2.3.1.1 Illumination Design Requirements

a. Luminance Control:

1. When a display will be used under varied ambient illumination, a dimming control shall be provided. The range of the control shall permit the displays to be legible under all expected ambient illumination levels.

2. Dimming to full OFF shall require a positive indication.

b. Dark Adaptation :

1. Partial Dark Adaptation - When the degree of dark adaptation required is not maximum, low brightness white light (preferably integral), that is adjustable as appropriate, shall be used.

2. *Complete Dark Adaptation - When complete dark adaptation is required,* low luminance (0.07-0.34 cd/m^2) red light (greater than 620 nm) shall be provided for better visibility.

c. Light Distribution:

1. Where multiple displays are grouped together, lighting shall be balanced across the instrument panel such that the mean indicator luminances of any two instruments shall not differ by more than 33% across the range of full ON to full OFF.

2. Light distribution shall be sufficiently uniform within an integrally illuminated instrument such that the ratio of standard deviation of indicator element luminances to mean indicator luminance shall not be more than 0.25, using eight or more equally spaced test measurements.

d. False Indication or Obscuration - Provision shall be made to prevent direct or reflected light from making indicators appear illuminated when they are not, or to appear extinguished when they are illuminated.

9.4.2.3.1.2 Display Indicator Contrast Design Requirements

Requirements for contrast within an indicator are provided below.

(Refer to Paragraph 9.4.2.3.3.9c, Contrast, for information on VDT contrast requirements.)

a. Indicator Contrast - The luminance contrast within the indicator shall be at least 50%. However, this 50% contrast requirement does not apply to special displays specifically designed for legibility in sunlight.

b. Low Ambient Illumination - For low ambient illumination applications, contrast shall be at least 90%, with the background luminance less than the figure luminance.

9.4.2.3.1.3 Reflections Design Requirements

a. Displays shall be constructed, arranged, and mounted to prevent reduction of information transfer due to the reflection of ambient illumination from the display cover.

b. Reflections in viewing surfaces (e.g., view ports, windshields, etc.) shall be avoided.

c. Anti-reflection techniques (such as shields and filters) shall not be used if they noticeably degrade display quality.

(Refer to Paragraph 8.11, Windows Integration, for related information.)

9.4.2.3.1.4 Vibration Design Requirements

Display design shall be such that vibration of the display and/or the observer shall not degrade display readability below the level required for mission accomplishment.

(Refer to Paragraph 5.5, Vibration Design Requirements, for specific requirements.)

9.4.2.3.1.5 Display Size Design Requirements

As a minimum, displays shall be of sufficient size to provide readily usable data to the user. This requirement shall hold for all reasonably anticipated locations of the user's relative to the display.

9.4.2.3.2 Information Presentation Design Requirements

a. Content - The information displayed to an operator shall be prioritized such that the information which is necessary to perform specific actions or to make decisions is easiest to acquire.

b. Equipment Response - Signal devices, including pushbutton signal lights, shall display equipment response and not merely control position.

c. Signal Absence:

1. The absence or extinguishment of a signal or visual indication shall not be used to indicate a "ready" or "in tolerance condition, unless the status of the caution light filament and its associated circuitry can be easily tested by the operator and operator perception of such events is not time critical. Display devices shall have a positive indication of on or ready.

2. The absence or extinguishment of a signal or visual indicator shall not be used to denote a condition; however, the absence of a signal or visual indication shall be acceptable to indicate a "power off" condition for operational displays only - not for maintenance displays.

d. Range and Accuracy - Display range and readout accuracy shall be consistent with the needs of the crewmembers to manage the spacecraft or equipment, but shall not exceed the accuracy of the input signal.

e. Duration - Non-dynamic signals and display information shall remain displayed until a direct user input cancels them. Dynamic signals and display information shall have durations of sufficient length to be reliably recognized under the highest expected operator workload and all anticipated operational environments.

f. Timeliness Displays (such as CRTs, head-up displays, etc.) requiring refreshed information shall be updated in a synchronous manner, where possible, and be refreshed to the degree of timeliness required by personnel in the normal operating or servicing mode.

g. Display Failure Clarity:

1. Displays shall be designed so that failure of the display or display circuitry shall be immediately apparent to the crew.

2. Where "automatic switch-over" to redundant power or signal sources (due to failure) is implemented, the automatic switch-over shall be made immediately obvious to the crew.

9.4.2.3.3 Display Types

a. System/Equipment Status - shall be inferred by the illumination of the indicator, not by the absence of illumination.

b. Indicator Labeling - shall be provided, close to the indicator, imparting the message intended by the light's illumination.

c. Indicator Color - The color of the light shall be clearly identifiable and meets with established color standards.

9.4.2.3.3.1 Maintenance Display Design Requirements

Maintenance displays shall be located so they do not interfere with normal flight displays. When possible, they shall not be visible when not in use.

9.4.2.3.3.3 Legend Light Design Requirements

a. Use - Legend lights shall be used in preference to simple indicator lights except where design constraints demand that simple indicators be used.

b. ON/OFF Legibility - When not energized, legends shall be legible but shall not appear to be energized (e.g., due to direct sunlight).

c. Information Presentation - A maximum of three lines of information shall be presented on the display face of a legend light.

d. Light/Switch Determination - It shall be easy to distinguish between legend lights and legend switches throughout the space module.

e. Status Indication - System/equipment status shall be inferred by the illumination of the indicator, not by the absence of illumination.

9.4.2.3.3.4 Scales and Pointers Design Requirements

Requirements for the design of scales and pointers are provided below.

a. Moving Pointer Circular Scales - Clockwise movement of a rotary control or movement of a linear control forward, up, or to the right shall produce a clockwise movement of circular scale pointers and an increase in the magnitude of the setting.

b. Moving Pointer Linear Scales - Clockwise movement of a rotary control or movement of a linear control forward, up, or to the right shall produce a movement up or to the right of the pointer of vertical and horizontal scales and an increase in the magnitude of the reading.

c. Fixed Pointer Moving Scale - Displays with moving scales and fixed pointers or cursors shall be avoided. When circular fixed-pointer, moving-scale indicators are necessary, clockwise movement of a rotary control or movement of a linear control forward, up, or to the right shall normally produce a counterclockwise movement of the scale and an increase in the magnitude of the reading.

d. Fixed Pointer Linear Scale - When use of vertical or horizontal fixed pointer, moving-scale indicators is necessary, clockwise movement of an associated rotary control or movement of a linear control forward, up, or to the right shall normally produce a movement of the scale down or to the left and an increase in the magnitude of the reading.

e. Pointers:

   1. Length - The control or display pointer shall extend to, but not overlap, the shortest scale graduation marks.

   2. Tip configuration - The pointer tip shall be tapered at a 20° angle (40° included angle), terminating in a flat tip equal in width to the minor scale graduations.

   3. Mounting - The pointer shall be mounted as close as possible to the face of the dial to minimize parallax (see Figure 9.4.2.3.3.4-1).

   4. Color - Pointer color from the tip to the center of the dial shall be the same as the color of the marks. The tail of the pointer shall be the same color as the dial face unless the tail is used as an indicator itself or unless the pointer is used for horizontal alignment.

f. Pattern/Color Coding - When certain operating conditions always fall within a given range on the scale, these areas shall be made readily identifiable by means of pattern or color coding applied to the face of the instrument.

g. Orientation - Alphanumerics on stationary scales shall be oriented in the local vertical position.

h. Zero Position and Direction of Movement - When positive and negative values are displayed around a zero or a null position, the zero or null point shall be located at either the 12 or 9 o'clock position. The magnitude of positive values shall increase with clockwise movement of the pointer, and the magnitude of negative values shall increase with counterclockwise movement. When pointer movement is more than 360°, the zero or reference point shall be located at the 12 *o'clock position.*

i. Scale Break - There shall be an obvious break of at least 10 degrees of arc between the two ends of the scale, except on multi-revolution instruments such as clocks.

j. Number of Pointers - Whenever precise readings are required, not more than two coaxial pointers shall be mounted on one indicator face.

k. Pointer Alignment - When a stable value exists for given operating conditions in a group of circular-scale indicators, the indicators shall be arranged either in rows so that all pointers line up horizontally on the 9 o'clock position under normal operating conditions or in columns so that all pointers line up vertically in the 12 o'clock position under normal operating conditions. If a matrix of indicators is needed, preference shall be given to the 9 o'clock position.

l. Relative Position of Scale Marks and Number - When reading time and accuracy are critical, circular scale markings and the location of associated numbers shall be arranged to prevent pointers from covering any portion of the scale marks or numerals. The pointer shall come to within 0.8-1.6 mm (0.03-0.06 in.) of all scale markings (See Figure 9.4.2.3.3.4-2).

m. Placement of Pointers - Pointers shall be located to the right of vertical scales and at the bottom of horizontal scales.

n. Placement of Numerals - Numerals shall be placed on the side of the graduation marks away from the pointer to avoid having numbers covered by the pointer. If space is limited (for curved or arc scales) numerals may be placed inside of graduation marks to avoid undue constriction of the scale.

o. Setting - If the display will be used for setting a value (e.g., tuning in a desired frequency), the unused portion of the dial face shall be covered, and the open window shall be large enough to permit at least one numbered graduation to appear at each side of any setting.

9.4.2.3.3.5 Clock and Timer Design Requirements

a. Digital Clocks and Timers - Time measurement indicators shall be of the digital readout type. Where applications require the display of qualitative information (e.g., relative approximate time) other types of indicators (e.g., analog clocks and/or clocks of lesser accuracies) may be used, subject to the approval of the procuring activity.

b. Format - Time measurement indicators shall indicate time or time intervals in seconds (00 to 59), minutes (00 to 59), and hours (00 to 23). Values extending beyond 24 hours shall be displayed in terms of days unless otherwise specified. Greater or lesser resolution will be provided as required.

c. Accuracy - Accuracy shall meet the requirements of the task.

d. Control Modes - Unless otherwise specified, the manual control modes listed below shall be provided for each time measurement indicator.

1. Start - Upon activation of the start control line, the indicator shall begin to count within 100 milliseconds.

2. Stop - Upon activation of the stop control line, the indicator shall stop within 100 milliseconds.

3. Reset - Upon activation of the reset control line, the indicator shall reset to zero within 500 milliseconds.

4. Slew/Set:

a) Individual digit slew control shall be provided.

b) A manually set indicator shall slew in an upward direction (from the lowest reading to the highest reading) at the rate of 2 digits per second. A downward slewing mode is not required.

c) For applications where a "direct set" mode is provided in lieu of a timer shall display the commanded reading within 500 milliseconds after the activation of the "enter" or "proceed" command.

d) Upon activation of the count up command and start command, the indicator will count up and continue counting up through zero upon reaching maximum count (e.g., 59:58, 59:59, 00:00, 00:01, 00:02).

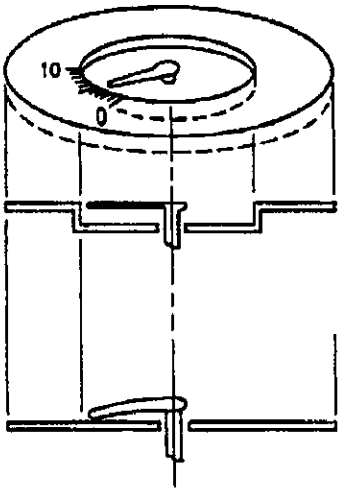

Figure 9.4.2.3.3.4-1 Scale and Dial Positioning to Minimize Parallax

MSIS 109

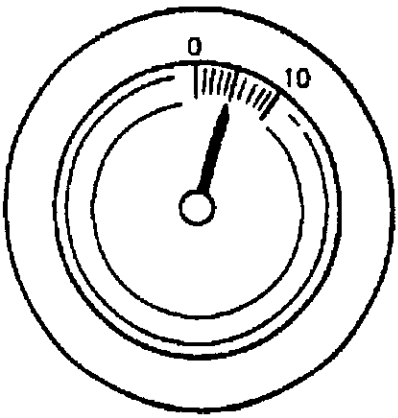

Figure 9.4.2.3.3.4-2 Relationship Between Pointer and Scale Marks to Maximize Reading Accuracy

MSIS 110

e) Upon activation of the countdown command and start command, timers shall countdown to zero and upon reaching zero shall begin to count up (e.g., 00:02, 00:01, 00:00, 00:01, 00:02). This control mode shall be implemented for event timers. The mode shall not be provided for clocks unless specifically requested.

f) There shall be no possibility of ambiguity as to whether a timer is counting toward its target time, or has passed the target time and is counting away from it, if this ambiguity could negatively affect system performance. For example, an overtime light can be used.

9.4.2.3.3.6 Flag Display Design Requirements

a. Use - Flags shall be used to display qualitative, non-emergency conditions.

b. Location and Mounting - Flag indicators shall be located above the associated control switch, within meter windows, or with associated items as applicable. Panel flags shall be mounted as close to the surface of the panel as possible without obscuring necessary information.

c. Snap Action - Flags shall operate by snap action.

d. Contrast - A minimum of 75% luminance contrast shall be provided between flags and their backgrounds under all expected lighting conditions.

e. Malfunction Indication - When flags are used to indicate the malfunction of a visual display, the malfunction position of the flag shall obscure part of the operator's view of the malfunctioning display and shall be readily apparent to the operator under all expected levels of illumination.

f. Positions - Flag indicators shall be restricted to three positions, with preference being given to the two-position type.

g. Information Content - Each flag indicator shall indicate a single, immediately identifiable event (e.g., the completed opening of a valve).

h. Legend - Alphanumeric legends shall be used in lieu of, or in addition to, color coding whenever possible. When a legend is provided on the flag, the lettering shall appear upright when the flag assumes the active or no-go position.

i. Gray Flag - A gray colored (blank position) mechanical "talk back" flag shall mean that a particular system element is in an operational mode or is not inhibited from operation.

j. Barber Pole Flags - A barber pole (striped) flag shall mean that a particular system element is indeterminant, inactive, or inhibited from operation.

k. Red Flag - a red flag shall mean that a particular system element has failed.

l. Test Provision - A convenient means shall be provided for testing the operation of flags.

9.4.2.3.3.7 Digital Display Design Requirements

a. Mounting - Counters shall be mounted as close as possible to the panel surface so as to minimize parallax and shadows and maximize the viewing angle.

b. Spacing Between Numerals - The horizontal separation between numerals shall be between one quarter and one half the numeral width. Numbers having more than five digits shall have groups of three digits separated by either blank space equivalent to one-half the width of one character or by commas. Grouping shall start from the right.

c. Movement:

1. Snap action - Numbers shall change by snap action in preference to continuous movement.

2. Update rate - The update rate shall not be faster than two per second.

3. Reset - The rotation of a counter reset knob shall be clockwise to increase the counter indication or to reset the counter.

4. Slew rate - Manual slewing modes, when provided, shall be capable of slewing individual digits at a normal rate of two characters per second. A separate control shall be provided for each individual digit (e.g., "units" digit, "tens" digit, etc.), unless otherwise specified.

d. Illumination - Digital displays shall be self-illuminated when used in areas in which ambient illumination will provide display luminance below 3.5 cd/m^2 (1 ft-L).

e. Individual characters shall normally be limited to the numbers 0 through 9, the capital letters of the English alphabet (A through Z), the plus (+) and minus (-) signs, and the decimal point.

f. Accuracy - Digital indicators shall possess an internal accuracy equal to or better than the least significant digit displayed by the indicator.

g. Analog Inputs - When analog-to-digital conversion is required to display an analog signal in digital form, the displayed digit(s) shall reflect the analog signal rounded off to the nearest whole number of the least significant digit displayed (Note: 0.5 shall be rounded up).

9.4.2.3.3.8 Light Emitting Diode (LED) Design Requirements

a. In general, the standards for LEDs will be the same as the requirement for transilluminated displays, paragraph 9.4.2.3.3.11 of this standard.

b. Intensity Control - LEDs shall be capable of being dimmed.

c. Color Coding - Use of LED color coding shall conform to Paragraph 9.5.3.2i, herein.

d. Lamp Testing - LED indicator lights with less than 100,000 hours mean time between failure (MTBF) shall require a lamp testing capability.

9.4.2.3.3.9 Visual Display Terminal (VDT) Design Requirements

a. Resolution - All displays shall have a minimum resolution of 67 lines per inch.

b. Luminance - The minimum level of luminance recommended for characters on a VDT, regardless of wavelength, shall be 70 cd/m^2 (20 fL) with a level of 170 cd/m^2 (50 fL) preferred.

c. Contrast:

1. Controls - VDTs shall be equipped with controls that permit the crew to optimize VDT discriminability under all anticipated environmental and systems operating conditions. Adjustment of brightness, contrast, and other electronic parameters shall permit the detection of the weakest target that is simulated.

2. Tolerance - Operating tolerance for contrast shall be 2 %.

3. Manual control - Under normal operating conditions, a manual VDT brightness control shall be provided allowing selection of contrast between *the lowest intensity symbology and its background of from 1:1 to at least* 16:1.

4. High ambient - As the highest ambient light level is reached, the contrast ratio between the lowest intensity symbology and the background shall degrade to not less than 2:1 (unless a lower contrast has been manually selected).

5. Automatic control - Where critical images (those necessary for crew safety and mission success) are exposed to rapid or frequent changes in ambient light levels, the contrast ratio shall be automatically maintained at a level selected by the operator.

6. Recommended contrast - The maximum contrast shall be 90%, the minimum shall be 88%. This narrow range applies specifically to alphanumeric displays with contrast defined as: $\%C = (Lc+Lr)-(Ld+Lr) \times 100$, C = contrast, Lc = character luminance, Ld = background luminance, Lr = reflected luminance.

d. Glare - Glare from a VDT screen shall be controlled for viewing from any angle within 30° of the axis normal to the screen.

(Refer to Paragraph 9.4.2.2c, VDT Enhancement, for recommendations on glare control.)

e. Surround:

1. The luminance range of surfaces immediately adjacent to the display shall be between 10% and 100% of screen background luminance.

2. Surfaces adjacent to the display shall have a dull matte finish.

f. Flicker - the refresh rate for VDTs shall not be less than 55 Hz. For alphanumerics presented in negative contrast (dark characters on light background) the refresh rate shall be at least 100 Hz.

g. Viewing Distance and Angle:

1. A nominal viewing distance of 510 mm (20 in.) for VDT use shall be provided.

(Refer to Paragraph 9.4.2.2c, VDT Enhancement, for additional information on recommended viewing distances for VDT displays.)

2. Viewing Angle - All areas of the display surface shall be legible from within at least 30 degrees of the axis centered on, and normal to, the screen.

h. Installation - The face of VDT displays shall be flush with the surface of the panel in which it is installed.

i. VDT Alphanumerics:

(Refer to Paragraph 9.5.3.1.14, Alphanumeric Design, for Labeling and Coding Requirements.)

1. Character definition - The smallest definition for a dot matrix shall be 5 by 7 dots, with 7 by 9 preferred. If system requirements call for symbol rotation, a minimum of 8 by 11 is required, with 15 by 21 preferred.

2. Character font:

a) Unless precluded by other requirements, a standard font shall be used across an entire system.

b) The font shall include lower case characters and allow for descenders.

c) Superscripts and subscripts shall be provided.

3. Character size:

a) Character height:

1) For extended text, character height shall subtend a minimum of 15 minutes of arc for low definition characters (5x7). The maximum height shall be 22 minutes of arc unless a task analysis indicates need for a greater height in any specific application.

2) Flight display characters (not extended text) shall not subtend less than 24 minutes of visual angle to ensure adequate legibility under launch/entry conditions.

b) Character width - Character width shall be approximately 75% of character height.

c) Stroke width - Stroke width shall be 1/6 to 1/8 of character height.

4. Alphanumeric spacing:

a) Vertical spacing (line spacing) - Vertical spacing between lines shall be great enough so that immediately adjacent ascenders and descenders are separated by at least one blank pixel.

b) Horizontal spacing:

1) Between words - In printed text, normal spacing between words on a line shall be one character width.

2) Between characters - Minimum spacing between successive characters on a line shall be one pixel or 20% of character width (whichever is greater).

c. Descender Length - Descenders shall descend below the line by a distance of 10% to 15% of the upper case letter size.

5. Case - Extended text shall be in uppercase and lowercase letters. Words consisting of uppercase letters shall be used only to attract the operator's attention (e.g., for a label or title).

j. Target Size - When rapid identification is required (e.g., a target of complex shape is to be distinguished from a non-target shape that is also complex), the target signal shall subtend no less than 20 minutes of visual angle at the intended viewing distance. (The term "target" is used to mean any object, symbol, pattern, or marking that an operator must see.)

k. Display Face Facsimiles - Images of scale indicators, digital indicators, signal devices, and other display faces synthesized on VDT screens shall conform to the general requirements previously listed for specific types of displays.

l. Color - When color VDTs are used, they shall possess the capability to display at least four colors (in addition to black and white) for alphanumeric and two-dimensional displays. For three-dimensional graphics displays the VDT shall possess the capability to display at least nine colors.

m. Display Overlays - The VDT shall provide the capability to display video with text and graphic overlays.

n. Highlighting - VDT, as a minimum, shall provide the following highlighting techniques: bold (high intensity) characters, reverse polarity, blinking.

o. Windowing - The VDT shall provide windowing capability. The user shall have the capability to create windows, delete windows, overlay windows, activate windows, move windows, and size windows. Images within windows shall be scrollable, if they are larger than the window itself.

9.4.2.3.3.10 Hardcopy Display Design Requirements

a. Printers:

1. The printer shall print copy at a rate of at least 400 words per minute if the user is interacting with the computer through the printer.

2. Printer delay shall be no more than 1 to 2 seconds to acknowledge a command if the user is interfacing with the computer through the printer.

3. Printer noise level shall not exceed the NC 50 contour. If it does, the printer shall be in an enclosed area away from other personnel.

   (Refer to Paragraph 5.4.3.2.3.1, Wide-Band, Long-Term Annoyance Noise Exposure Requirements, for specific requirements.)

4. Paper advance control or print head advance shall be provided to permit the operator to read the most recently printed line.

5. A provision shall be made for taking up paper.

6. The capability to remove printed material rapidly and neatly shall be provided.

7. There shall be an indicator of the remaining paper supply.

8. Reloading paper or replacing ribbon shall be accomplished without disassembly or using special tools.

9. Paper retainers shall be provided to reduce paper vibration.

10. Guides shall be provided to facilitate accurate positioning of the paper.

11. Where applicable, printers shall be designed to accept a variety of paper sizes.

12. The printer shall have graphics capability unless otherwise specified.

13. Where applicable, printers shall have draft mode (high speed) and high print quality mode (lower speed).

14. A print malfunction alarm shall be provided to alert the user when requested printing is not being done due to some malfunction.

15. Matte finish paper shall be used to avoid smudged copy and glare.

16. Hard copy print shall be black characters on a white background unless otherwise specified.

b. Plotters and Recorders:

1. Use - Plotters and recorders shall be used when a visual record of continuous graphic data is necessary or desirable.

2. Visibility - Critical graphics (those points, curves, and grids that must be observed when the recording is being made) shall not be obscured by pen assembly, arm, or other hardware elements.

3. Contrast - A minimum of 50% luminance contrast shall be provided between the plotted function and the background on which it is drawn.

4. Take-up device - A take-up device for extruded plotting materials shall be provided.

5. Job aids - Graphic overlays shall be provided where these may be critical to proper interpretation of graphic data as it is being generated. Such aids shall not obscure or distort the data.

6. Smudging/smearing - The plot shall be resistant to smudging or smearing under operational use.

9.4.2.3.4 Display Maintenance Design Requirements

a. Lamp Redundancy - Incandescent display lighting shall incorporate filament redundancy or dual lamps. When one filament or bulb fails, the intensity of the light shall decrease sufficiently to indicate the need for lamp replacement, but not so much as to degrade operator performance.

b. Lamp Testing - When indicator lights using incandescent bulbs are installed on a control panel, it shall be possible to test all control panel lights at one time. When applicable, design shall allow testing of all control panels at one time. Panels containing three or fewer lights may be designed for individual press-to-test bulb testing.

c. Lamp Replacement - Where possible, lamps shall be removable and replaceable from the front of the display panel. The procedure for lamp removal and replacement shall not require the use of tools and shall be easily and rapidly accomplished.

d. Lamp Removal Safety - Display circuit design shall permit lamp removal and replacement while power is applied without causing failure of indicator circuit components or imposing personnel safety hazards.

9.4.3.3 Audio Displays Design Requirements

9.4.3.3.1 General Design Requirements

General requirements for the design of audio displays are provided below.

a. False Alarms - The design of audio display devices and circuits shall preclude false alarms.

b. Failure - The audio display devices and circuits shall be designed to preclude warning signal failure related to system or equipment failure and vice versa. Positive and attention demanding indication shall be provided if failure occurs.

c. Circuit Test - All audio displays shall be equipped with circuit test devices or other means of operability testing.

d. Disable - An interlocked, manual disable shall be provided if there is any failure mode which can result in a sustained activation of an audio display.

9.4.3.3.2 Audio Input/Output Equipment Design Requirements

a. Frequency Response - Microphones/input devices, loudspeakers/output devices, and associated audio system devices shall be designed to respond optimally to that part of the speech/audio spectrum most essential to intelligibility (i.e. 200 to 6,100 Hz). Where system engineering necessitates speech transmission bandwidths narrower than 200 to 6,100 Hz, the minimum acceptable frequency range shall be 250 to 4,000 Hz. Amplitude variation across the frequency response bandwidth (flatness) shall be not vary more than +/- 3dB.

b. Microphones/input devices:

1. Dynamic Range - The dynamic range of a microphone/input devices shall be great enough to admit variations in signal input of at least 50 dB.

2. Noise Canceling - Noise canceling microphone/input devices are required for high noise environments (85 dB (A) or above) and are preferred in all areas.

c. Loudspeaker/output devices :

1. Sidetone - The speaker's verbal input shall be in phase (not have a perceivable delay) with its reproduction as heard on the output device.

2. Audio equipment used to feed multiple channels into output devices shall maintain the frequency response uniformly (+/- 5dB) over the bandwidth.

3. Headsets - If listeners will be working in high ambient noise (85 dB(A) or above), binaural rather than monaural headsets shall be provided. Unless operational requirements dictate otherwise, binaural headsets shall be wired so that the sound reaches the two ears in opposing phases. Their attenuation qualities shall be capable of reducing the ambient noise level to less than 85 dB(A). Provisions shall be incorporated to furnish the same protection to those who wear glasses.

d. Use of Deemphasis - When transmission equipment employs pre-emphasis and peak-clipping is not used, reception equipment shall employ frequency Deemphasis of characteristics complementary to those of pre-emphasis only if it improves intelligibility (i.e., Deemphasis shall be a negative-slope frequency response not greater than 9 dB per octave over the frequency range 140 to 4,800 Hz).

e. Feed Back Noise - Positive feedback noise shall be controlled to the extent that normal voice communication is not adversely affected.

f. Earphone/Speaker To Microphone Feedback Isolation:

1. Sufficient electrical, mechanical, and acoustical isolation shall be provided to preclude feedback oscillations (squeal problems) or echo effects (no discernable unwanted voice echo to speaker).

2. Earphone/Speaker to microphone system loop gain shall be limited to less than 1.

9.4.3.3.3 Operator Comfort and Convenience Design Requirements

a. Comfort - Communication equipment to be worn by a crewmember (e.g., headphones) shall be designed to preclude operator discomfort. Metal parts of the headset shall not come in contact with the user's skin.

b. Hands-Free Operation - Operator microphones and headphones shall be designed to permit hands-free operation under normal working conditions.

9.4.4.3 Caution and Warning System Design Requirements

9.4.4.3.1 Alarm Classification Design Requirements

9.4.4.3.1.1 Emergency Display Design Requirements

a. Definition of Class 1 Alarm - A life threatening condition requiring immediate attention. Predefined crew responses may be required prior to taking corrective action. Safe haven concept activation may be necessary. Examples: cabin pressure decrease, fire/smoke, toxic atmosphere, impending collision.

b. Annunciation Requirements:

1. Each condition shall trigger a unique aural tone, (e.g., fire-siren, cabin pressure-klaxon).

2. Tones and visual annunciation shall be heard and seen in any habitable area.

3. Tones shall wake sleeping crewmembers.

4. Illuminated visual annunciation shall indicate presence of specific emergency condition.

5. Tone shall be resettable at all major control consoles/areas.

6. Corrective action information shall be available.

9.4.4.3.1.2 Warning Signal Design Requirements

a. Definition of Class 2 Alarm - Conditions that require immediate correction to avoid loss of major impact to mission or potential loss of crew. Examples: electrical bus loss, cooling loop failure, rapid loss of consumables.

b. Annunciation Requirements:

1. A warning signal shall trigger an identifiable warning tone and master warning light at all major control consoles/areas.

2. Tone and light shall be reset only by crew action.

3. Tone shall be adjustable in sleeping quarters to wake or not to wake sleeping crewmembers as desired (but, see "4" below).

4. At least one crewmember shall always be available to receive a warning signal.

5. Message or light shall be provided to specify condition.

6. Method shall be provided to determine if condition returns within limits.

7. Corrective action information shall be available upon crew request.

9.4.4.3.1.3 Caution Display Design Requirements

Requirements for the design of caution displays are provided below.

a. Definition of Class 3 Alarm:

1. Conditions of a less time critical nature, but with the potential for further degradation if crew attention is not given. Example: heavier than normal consumable usage.

2. Messages that flag loss of redundant equipment such that a subsequent failure could result in a warning condition. Action is not necessarily required except that the effect of the loss in future activity planning must be considered. Example: loss of backup communication equipment.

b. Annunciation Requirements:

1. Caution displays shall trigger a general tone and light (different than class 2 tone/light) for a set time duration. This duration may be set differently for each caution condition .

2. Tone and light shall be extinguishable by crew action.

3. Data system message shall specify condition and corrective action at the discretion of the crew.

4. Tone shall be adjustable in sleeping quarters to wake or not to wake sleeping crewmembers as desired (but, see "4" below.)

5. At least one crewmember shall always be available to receive a caution signal.

6. A method shall be provided to determine if condition returns within limits.

7. A method shall be provided to identify momentary out of limits condition.

9.4.4.3.2 General Caution and Warning System Design Requirements

General requirements for caution and warning systems (CWS) are provided below.

a. CWS Recovery - The CWS shall be rapidly recoverable from a software system crash.

b. CWS Test Limits - Permanent limit or test conditions shall be stored redundantly in such a way that they are protected from system crashes and single operator errors involved with temporary limit changes.

c. System Failure - The system shall remain operable during and after major system failures (power, data, etc.).

d. Safe Haven CWS - The CWS shall be able to supply life support and rescue systems status to crewmembers using a "safe haven".

e. Flexibility - The CWS design shall provide for any anticipated expansion or reconfiguration of the space module or the addition of new modules, payloads, or experiments.

f. Sensor Changeout - Critical CWS sensors shall be accessible for changeout when feasible.

g. System Status During Alarm - After an alarm is triggered, it shall be quickly determinable if the out-of-limit condition still exists and/or if a new out-of-limit condition occurs.

h. CWS Suppression - The CWS shall allow alarms, due to predefined activities or conditions, to be screened or suppressed.

i. Alarm Source - The source of an alarm due to any limit violation shall be easily determined (even if alarm condition is no longer present).

j. Time History - The history of all alarms shall be maintained and shall be easily retrievable, with the time of occurrence noted.

k. Alarm Classification - The approximate level of classification of an alarm shall be instantly apparent.

l. CWS Status - After real-time modifications are made to CWS software, exact status shall be easily determined.

m. CWS Baseline Limits - A return to the baseline (default) configuration of the CWS shall be easily enabled after a temporary modification or software "crash".

n. Multiple Alarms - A single failure condition shall not cause a "waterfall" of related alarms. However, all out-of-limit conditions shall be retrievable by crewmembers.

o. *Existing Signals - Established and recognized audio alarm signals shall be* used, provided they are compatible with the acoustic environment and the requirements specified herein. Standard signals shall not be used to convey new meanings.

p. Priority - The CWS shall recognize the highest category of unacknowledged signal.

q. Disruptive Alarms:

1. All Class 1 through 3 alarms that would disrupt crew performance shall be capable of being easily downgraded to a redundant but non-disruptive alarm after its initial alerting function has been acknowledged. For example, an audio alarm might be downgraded to a non-disruptive visual signal that would be presented continuously until the alert condition no longer existed.

2. A disruptive alarm that requires manual shut-off shall not be used if the act of shutting it off would interfere with the corrective action required.

r. Alerting Function - CWS alarm signals shall have positive alerting characteristics under all operating conditions.

9.4.4.3.3 Visual Caution and Warning Display Design Requirements

a. Master Alarm Light:

1. A master alarm light shall be provided in cases where caution, warning, or emergency lights have been located outside of the operator's 30 degree cone of vision.

2. Illumination of the master alarm light shall indicate that at least one or more caution, warning, or emergency lights have been energized.

3. The master alarm light and any applicable caution, warning, or emergency light(s) shall be energized simultaneously.

4. Master alarm status lights shall be visible from any location in a space module.

b. Advisory and Alerting - Displays such as multifunction displays, cathode ray tube displays, head-up displays, collimated displays and other visual display devices displaying simultaneous and integrated information shall advise or alert operating personnel to information that becomes critical within the display.

c. Extinguishing Signal Lights - Signal lights shall be extinguished by one or more of the following methods:

1. Restoration of a within-tolerance condition without remedial action or as a result of automatic switch-over.

2. Correction of the situation as a result of remedial action by the crew.

3. Performance of some action by the crew which is directly related to the controls of the affected system or component. This action indicates one or more of the following:

a) An acknowledgement of the occurrence of the malfunction.

b) The completion of indirect remedial action.

c) The shutting down of the malfunctioning system or component.

d. Unambiguous Signals - CWS information shall be presented unambiguously, identifying the actual problem.

e. Color - The color of CWS indicator lights shall conform to the designation given in JSL-002.

f. Brightness - Indicator lights shall be at least three times brighter than the other indicators on the same panel.

9.4.4.3.4 Audio Caution and Warning System Display Design Requirements

9.4.4.3.4.1 Audio Alarm Characteristics Design Requirements

a. Frequency:

1. Range - The frequency range shall be between 200 and 5,000 Hz and, if possible, between 500 and 3,000 Hz. Frequencies below 500 Hz shall be used when signals must bend around obstacles or pass through partitions. The selected frequency band shall differ from the most intense background frequencies.

2. Spurious signals - The frequency of an alarm tone shall be different from that of the electric power employed in the system to preclude the possibility that a minor equipment failure may generate a spurious signal.

b. Intensity

1. Compatibility with acoustical environment - The intensity, duration, and source location of audio alarms and signals shall be compatible with the acoustical environment of the intended receiver as well as the requirements of other personnel in the signal areas.

2. Compatibility with clothing and equipment - As applicable, audio signals shall be loud enough to be heard and understood through equipment or garments.

3. Discomfort - Audio alarm signals shall not be of such intensity as to cause discomfort. The limits established in paragraph 5.4.3 Acoustics Design Requirements shall not be exceeded.

4. Audibility - A signal-to-noise ratio of at least 20 dB shall be provided in at least one octave band between 200 and 5,000 Hz at the operating position of the intended receiver.

5. Pressure operated gain control switches to compensate for volume attenuation in underpressurized areas shall be provided.

c. Alerting Capability:

1. Attention - Signals with high alerting capacity shall be provided when the system or equipment imposes a requirement on the operator for concentration of attention. Such signals shall not, however, be so startling as to preclude appropriate responses or interfere with other functions by holding attention away from other critical signals.

2. Onset and sound pressure level - The onset of critical alerting signals shall be sudden, and at a sound pressure level as specified in b.4. above.

3. Headset - When the operator is wearing earphones covering both ears during normal equipment operation, the audio alarm signal shall be directed to the operator's headset as well as to the work area.

d. Discriminability:

1. Use of different characteristics - When several different audio signals are to be used to alert an operator to different types of conditions, discriminable difference in intensity, pitch, or use of BEATS and HARMONICS shall be provided. If absolute discrimination is required, the number of signals to be identified shall not exceed four.

2. Action segment - The identifying or action segment of an audio emergency signal shall specify the precise emergency or condition requiring action.

3. Critical signals - The first 0.5 second of an audio signal requiring fast reaction shall be discriminable from the first 0.5 second of any other signal that may occur.

4. Differentiation from routine signals - Audio alarms intended to bring the operator's attention to a malfunction or failure shall be differentiated from routine signals, such as normal operation noises.

5. Prohibited types of signals - The following types of signals shall not be used as alarms where possible confusion might exist because of the operational environment:

a) Modulated or interrupted tones that resemble navigation signals or coded radio transmissions.

b) Steady signals that resemble hisses, static, or sporadic radio signals.

c) Trains of impulses that resemble electrical interference whether regularly or irregularly spaced in time.

d) Simple warbles that may be confused with the type made by two carriers when one is being shifted in frequency (beat-fequency-oscillator effect).

e) Scrambled speech effects that may be confused with cross modulation signals from adjacent channels.

f) Signals that resemble random noise, periodic pulses, steady or frequency modulated simple tones, or any other signals generated by standard countermeasure devices (e.g., "bagpipes").

g) Masking Other Critical Channels - Audio alarm signals shall not interfere with any other critical functions or mask other critical audio signals.

9.4.4.3.4.2 Audio Alarm Control Design Requirements

a. Automatic or Manual Shut-Off - When an audio signal is designed to persist as long as it contributes useful information, a shut-off switch controllable by the operator, the sensing mechanism, or both, shall be provided, depending on the operational situation and personnel safety factors.

b. Automatic Reset - Whether audio alarm signals are designed to be terminated automatically, by manual control, or both, an automatic reset function shall be provided. The automatic reset function shall be controlled by the sensing mechanism which shall recycle the signal system to a specified condition as a function of time or the state of the signaling system.

c. Volume Control:

1. Automatic or manual - The volume (loudness) of an audio alarm signal shall be designed to be controlled by the operator, the sensing mechanism, or both, depending on the operational situation and personnel safety factors. Control movements shall be restricted to prevent reducing the volume to an inaudible level.

2. Ganging to mode switches - Volume controls may be ganged to mode switches to provide maximum output during mission phases in which intense noise may occur and to provide reduced volume at other times. Ganging shall not be accomplished if there is a possibility that intense noise may occur in an emergency situation during a mission phase in which the volume would be decreased below an audible level.

9.4.4.3.4.3 Verbal Alarm Signal Design Requirements

a. Nature of Signals - Verbal alarm signals shall consist of:

   1. An initial alerting signal (non-speech) to attract attention and to designate the general problem.

   2. A brief standardized speech signal (verbal message) which identifies the specific condition and optionally suggests appropriate action.

b. Intensity - Verbal alarms for critical functions shall be at least 20 dB above the speech interference level at the operating position of the intended receiver.

c. Vocal Criteria:

   1. Type of Voice - The voice used in recording verbal alarm signals shall be distinctive and mature.

   2. Delivery style - Verbal alarm signals shall be presented in a formal, impersonal manner.

d. Speech Processing - Verbal alarm signals shall be processed only when necessary to increase or preserve intelligibility, such as by increasing the strength of consonant sounds relative to vowel strength. Where a signal must be relatively intense because of high ambient noise, peak-clipping may be used to protect the listener against auditory overload.

e. Message Content - In selecting words to be used in audio alarm signals, priority shall be given to intelligibility, ability to convey desired message, and conciseness in that order.

f. Critical Verbal Alarms - Critical verbal alarm signals shall be repeated with not more than a 3 second pause between messages until the condition is corrected or overridden by the crew.

9.4.5 Advisory and Tutorial Displays

9.4.5.1 Advisory and Tutorial Design Requirements

9.4.5.1.1 Advisory Display and Annunciation Requirements

a. Definition of an Advisory Display - System initiated messages advising of a processs status or other discrete event. Examples: Rendezvous solution complete, mass memory search for format in progress. Crew programmed reminder alerts keyed to time, orbit phase, bi-level state, parameter limit.

b. Annunciation Requirements:

   1. No tones or lights shall be provided.

   2. Message shall accompany all alerts.

   3. A history of all messages shall be main- tained and available for crew recall.

   4. If advisory display is crew programmed the option shall be provided to direct it to all workstations or to a single designated workstation.

   5. If advisory display is not crew programmed it shall be limited by the specific workstation.

   6. If advisory displays are crew programmed aural annunciation, the options shall be provided to direct them to one or more work locations.

9.4.5.1.2 Tutorial Display and Annunciation Requirements

a. Definition of a Tutorial Display - Messages denoting illegal keyboard syntax, or for assisting in proper completion of required inputs. These are limited to software configuration requirements.

b. Annunciation Requirements:

   1. No tones/lights shall be used.

   2. Messages shall be limited to the workstation in use.

9.5.3 Labeling and Coding Design Requirements

9.5.3.1 Labeling Design Requirements

9.5.3.1.1 Labeling Standardization Design Requirements

a. Standardization - To the extent practical, labeling shall be standardized between and within systems.

b. Categories - Different labeling categories shall be distinct from one another (e.g., it shall be obvious with a quick glance that a label with operating instructions is not an emergency procedure or a stowage label).

9.5.3.1.2 Readability Design Requirements

a. Vibration, Motion, and Illumination - Labels and markings shall allow easy and accurate reading in the operational environment, which includes vibration, motion, and illumination considerations.

b. Concise and Unambiguous - Labels shall be as concise and unambiguous as possible while still conveying the intended information.

c. Language - Labels shall be written in the English language.

d. Redundancy - Redundancy shall be minimized.

e. Accuracy - Labels and markings shall provide the required accuracy of identification.

f. Size - The size of labels and markings shall be appropriate for all distances from which they must be read.

   (Refer to Paragraph 9.5.3.1.14.6, Character Height Design Requirements, for additional requirements.)

g. Illumination - Labels and markings shall be designed to be read at all expected illumination levels and color characteristics of the illuminant.

h. Critical Function - The design of labels and markings shall take into account the criticality of the function to be labeled.

i. Specular Reflection - The design of labels and markings shall minimize the effects of specular reflection on their readability. A matte or lusterless finish shall be used.

j. Sharpness, Contrast, and Wear - Labels and markings shall be sharp, have high contrast, and not lose readability as a result of wear.

k. Clutter - Labeling and markings shall be designed and placed so as to minimize visual clutter that could result in information overload.

l. Iconic/Symbolic Labels - Iconic or symbolic labels shall be permitted.

9.5.3.1.3 Display Label Placement Design Requirements

a. Orientation - All markings and labels shall be oriented horizontally to the common plane so that they may read quickly and easily from left to right (vertical orientation shall be avoided whenever possible).

b. Display Labels - Labels identifying display functions shall be placed on the panel above the display.

c. Curved Surfaces - Placement of labels on curved surfaces shall be avoided when possible.

d. Visibility - Markings shall be located so that they are visible to crewmembers in the normal position of access or operation.

e. Overhead Panels - On overhead panels, markings and labeling shall be oriented such that they appear upright when observed from the operational viewing angle.

f. Clutter - Markings shall be spaced to avoid a cluttered appearance.

g. Association Errors - The arrangement of markings on panels shall be such that errors of association of one marking or set of markings with adjacent ones shall not be possible.

9.5.3.1.4 Scale Marking Design Requirements

a. Accuracy:

1. Display range and readout accuracy shall not exceed the needs of the crew to manage the equipment for which the displays are provided.

2. Scale markings shall not permit readout accuracies that are more precise than the accuracy of the input signal.

3. In general, scales that are to be read quantitatively to the nearest graduation mark shall be designed so that interpolation between graduation marks is not necessary. Interpolation, if required, shall be limited to one half the distance between minor graduation marks.

b. Interval Values:

1. The graduation intervals shall progress by 1, 5, or 2 units or decimal multiples thereof, in that order of preference.

2. The number of graduation marks between numbered graduation marks shall not exceed 9.

c. Scale Markings (High Luminance - above 1 ft-L):

1. The minimum width of major, intermediate, and minor marks shall be 0.32 mm (0.0125 in.).

2. The length of major, intermediate, and minor graduation marks shall be at least 5.6 mm, 4.1 mm, and 2.5 mm (0.22, 0.16, and 0.09 in.), respectively.

3. The minimum distance between major graduation marks shall be 13 mm (0.5 in.).

4. Minor graduation marks may be spaced as close as 0.89 mm (0.035 in.), but the distance shall be at least twice the stroke width for white marks on black dial faces and at least one stroke width for black marks on white dial faces.

d. Scale Markings (Low Luminance - below 1 ft-L):

1. The minimum width of a major graduation shall be 0.89 mm (0.035 in.); the minimum width of an intermediate graduation shall be 0.76 mm (0.030 in.); and the minimum width of a minor graduation shall be 0.64 mm (0.025 in.).

2. The length of major, intermediate, and minor graduation marks shall be at least 5.6 mm, 4.1 mm, and 2.5 mm (0.22, 0.16, and 0.10 in.), respectively.

3. The minimum distance between major graduation marks shall be 16.5 mm (0.65 in.).

4. Graduation marks shall be spaced a minimum of 1.5 mm (0.06 in.) between centerlines.

9.5.3.1.5 Alignment Marks/Interface Identification Design Requirements

a. Hardware Connectors

(Refer to Paragraph 11.10.3.5, Connector Identification/Alignment Design Requirements, for additional information.)

(Refer to Paragraph 11.5.3.2, Alignment Devices Design Requirements, for specific requirements.)

b. Orientation - When a piece of hardware requires a specific orientation that cannot be identified by alignment marks, arrows and/or labels shall be used to indicate the proper orientation.

c. Color - Unless color coding is to be employed, alignment marks shall be lusterless white on dark colored hardware and lusterless black on light colored hardware.

d. Identification - Interface identification shall be used to indicate the relationship between unattached items that are used together, except when this relationship is obvious.

e. Tethered Equipment - Interface identification shall not be used for movable items tethered to a mating part (e.g., dust cap for an electrical connector, hinged lid for a stowage container, etc.)

9.5.3.1.6 Equipment Identification Design Requirements

a. Equipment Marking - Equipment that must be located, identified, observed, or operated by a crewmember shall be marked with nomenclature that describes the function of the item and its pertinent interfaces. However, items whose use is obvious to the crew (e.g., food table, windows, etc.) are exempt from this requirement.

b. Numbered Items - Multi-quantity items that require individual distinction but are not serialized shall be individually numbered.

c. Serial Numbers - Multi-quantity items that are serialized shall display the serial number as part of the identification.

d. Name Plates - Name plates depicting manufacturer's name, serial numbers, etc., shall not be mounted on the control or display surface area of any equipment.

9.5.3.1.7 Location and Orientation Coding Design Requirements

a. Location and Orientation Designation - A system of location and orientation coding shall be established for the purpose of designating and locating crew interface items. The system shall be so designed as to permit a unilateral logical assignment of codes to items added or relocated.

b. Location Maps - A map of location codes shall be provided at the entrances to a room or sub-volume where the coding scheme is not obvious to the crewmember.

c. Location Code:

1. All fixed crew interface items (e.g., equipment, control/display stations, stowage containers, connector panels, etc.) shall display a location code adjacent to the identification marking.

2. Movable items that require a crew interface but are not stowed in a containment shall display a location code on a fixed surface adjacent to the item.

d. Orientation Designation - When the orientation of the vehicle axes is significant to crew operations and is not obvious, axis designators shall be displayed on appropriate surfaces.

9.5.3.1.8 Operating Instruction Design Requirements

a. Location - Operating instructions shall be located on or near equipment whose operation is not obvious to a crewmember.

b. Completeness - Operating instructions shall be complete enough to allow accurate task performance.

c. Equipment Name - The instructions shall have the title of the equipment to be operated centered above the text (see Figure 9.5.3.1.8-1).

d. Grouping - Instructions shall be grouped and titled by category (e.g., installation, removal, activation, calibration, etc.) if appropriate. (See example in Figure 9.5.3.1.8-1).

e. Case - Instructional text shall use upper and lower case letters (See Figure 9.5.3.1.8-1).

f. Title Selection - The titles of equipment, controls, displays, switch positions, and connectors shall be listed in upper case letters only. Care shall be taken to ensure that all title nomenclature is consistent with procedural handbooks and checklists.

g. Required Tools - Instructions for removal of stowage items shall list the tools required, if any, prior to the instructional text. Markings shall be used to locate the fasteners to be removed if clarification is required.

9.5.3.1.9 Stowage Container Labeling Design Requirements

a. Purpose - Stowage containers shall be labeled so that items are easy to find and return to place.

b. Transparent - Where practical, containers shall be transparent, thus allowing identification of contents at a glance.

c. Contents List - Each stowage container shall display a list of contents on its front surface visible to the crewmember. Items shall be listed one per line and launch quantities noted if greater than one.

d. Label Revision - Provisions shall be made to permit in-flight revisions to, or replacement of stowage labels on all stowable containers.

e. Individual Crew Items - Items allocated to a specific crewmember shall be identified on the listing with the user's title, name, or other coding technique.

SMMD

OPERATION

1. Obtain note pad
2. Place specimen on tray
3. MASS/ON/TEMP — MASS
4. RESET — press
5. Control lever — RELEASE (hold until counter stops)
6. Control lever — LOCK
7. Log reading on note pad
8. Repeat measurement for total of 3
9. MASS/OFF/TEMP — OFF
10. Control lever — LOCK (verify)
11. Remove specimen and log SMMD readouts on tag
12. Process specimen
13. If necessary clean tray and tie-down

CALIBRATION

1. Obtain SPI food log
2. Measure tray temp (M487 Digital Thermometer)
3. Log reading
4. MASS/OFF/TEMP — MASS
5. RESET — press
6. Control lever — RELEASE (hold until counter stops)
7. Control lever — LOCK
8. Log reading in Food Log
9. Repeat for a total of 5
10. Calib. points 0,50,100,150,250,350,500,750,900,0
11. MASS/OFF/TEMP — OFF
12. Voice record data at any convenient time

Figure 9.5.3.1.8-1 Operating Instructions

MSIS 104

f. Subdivided Containers:

1. If a storage container is subdivided internally into smaller closed containers, the sub-containers shall carry a list of contents.

2. If a sub-container is open to view and its contents are obvious, it is exempt from this requirement.

3. If the available marking space on a sub-container is insufficient to display the complete content titles, a contents list shall be displayed elsewhere and clearly identified as belonging to the sub-container.

4. The specific contents of each sub-container and its code shall be listed on the front surface of its container or near it.

g. Similar Item Labeling - Containers with designated locations for placement of several similar items (e.g., socket wrenches in a tool kit) shall have each location identified with the title of the item stowed.

9.5.3.1.10 Failed/Expendable Item Design Requirements

a. Failed Items - A method shall be provided for visually marking failed and expended items (e.g., equipment controls, displays, connectors, etc.) to indicate their unusable status. Color-coded labels with appropriate nomenclature (e.g., DO NOT USE) are preferred.

b. Discardable Items - Items to be discarded after use shall display a unique marking on the item. Color-coded labels with appropriate nomenclature (e.g., DISCARD) are preferred, and the method of disposal shall be included when applicable.

9.5.3.1.11 Contingency Labels and Marking Devices Design Requirements

a. Blank Labels - Blank labels shall be provided to allow contingency labeling.

b. Marking Devices - Marking devices shall be supplied for marking blank labels and revising quantities noted on stowage labels.

9.5.3.1.12 Grouped Controls and Displays Design Requirements

a. Group Identification - Functional groups of controls shall be clearly identified (e.g., by common color, by boundary lines.)

b. Labels of Functional Groups - Labels shall be used to identify functionally grouped controls and displays. Labels shall be located above the functional groups they identify.

c. Boundary Lines - When a line is used to enclose a functional group and define its boundaries, the labels shall be centered at the top of the group, in a break in the line. The width of the line shall not be greater than the stroke width of the letters.

d. Related Controls - When controls and displays must be used together in certain adjustments or activation tasks, appropriate labels shall indicate their functional relationships.

9.5.3.1.13 Caution and Warning Labels Design Requirements

(Refer to 9.5.3.2i, Color Coding, and 9.4.4, Caution and Warning Displays, for related information.)

a. Identification - Caution and warning labels shall identify the type of hazard and the action that would prevent its occurrence.

b. Location - The caution markings shall be located in a position that permits sufficient opportunity for the crew to avoid the hazard.

c. Immediate Action Controls - All controls, buttons, and small handles or levers requiring immediate access shall have their panel background colored in accordance with the applicable sub-section of Section 9.5.3.2; large handles or levers shall be similarly colored on the handle or lever itself.

d. Emergency-Use Items:

1. Emergency-use items (e.g., repair kits, emergency lighting, fire extinguisher, etc.) shall display a unique marking (EMERGENCY USE) surrounded by diagonal yellow and black stripes (see either on the item or adjacent to it.

2. For items located within a storage container, the diagonal striping shall be applied to the door of the container and the titles of the emergency items shall be included on the marking instead of the words EMERGENCY USE.

e. Warning Stripe Specification:

1. Warning stripes shall be alternate yellow 33538 and black 37038 per FED-STD-595a. The black stripes shall have a width not less than 1.6 mm (0.065 in.) and the yellow stripes shall be at least two times the width of the black stripes.

2. The striping shall be applied at a 45 degree angle rotated clockwise from the vertical.

3. The striping shall begin and end with a yellow strip.

4. The striping around a switch or button shall not be wider than 25 mm (1 in) or less than 3 mm (0.125 in).

5. If one side of a switch or button has less than 3 mm (0.125 in) space, no striping shall be applied to that side.

f. Label Specifications - Hazard identification labels shall use a letter size and spacing large enough to convey the warning (see Figure 9.5.3.1.13-1).

9.5.3.1.14 Alphanumeric Design Requirements

9.5.3.1.14.1 Font Style Design Requirements

a. Dark-Color Characters - Futura font shall be preferred. Commercial font styles for dark-color opaque alphanumerics on light-color opaque or transilluminated backgrounds and for hardware labels are indicated below in descending order of preference.

1. Fonts for engraved lettering: a) Futura Demibold, b) Gorton Normal,.and c) Gorton Condensed.

2. Fonts for engraved numerals: a) Futura Demibold, b) Gorton Modern.and c) Gorton Normal.

3. Fonts for printed lettering and numerals: a) Futura Demibold, b) Futura Medium.and c) Alternate Gothic No. 3.

b. Light-Color Characters - Futura Medium type shall be used for transilluminated or light-color opaque markings on dark opaque backgrounds.

c. Fit Problems - The use of condensed type (Future Condensed) or abbreviations shall be the preferred method for solving line length reduction in type size.

d. Stenciled Characters - Stencil-type characters shall not be used on display/control panels or other equipment.

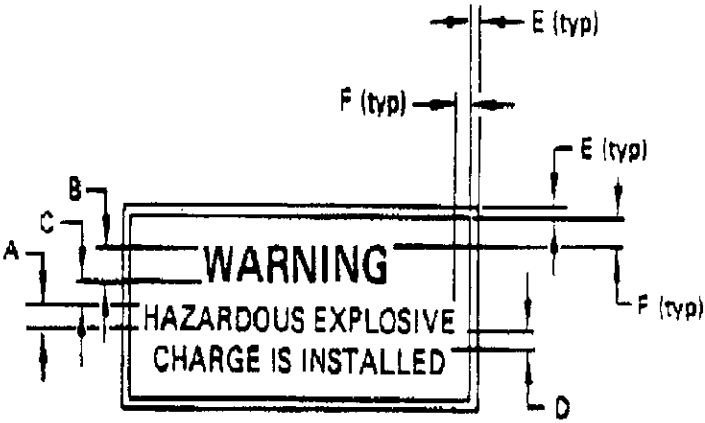

1/16 (typ) for labels
No radius for markings

A – Text or minor lines of lettering	= A
B – Heading or major line of lettering	= 1.25A to 2A
C – Spacing between heading and text	= 0.65A to A
D – Spacing between lines of text	= 0.50A
E – Border width	= 0.80A
F – Background border	= A

Figure 9.5.3.1.13-1 Letter Size and Spacing for Caution and Warning Labels

MSIS 105

9.5.3.1.14.2 Punctuation Design Requirements

a. Use - The use of punctuation marks shall be kept to a minimum.

b. Periods - Periods shall be omitted except when needed to preclude misinterpretation.

c. Hyphens - Hyphens shall be avoided whenever possible.

d. Parentheses and Ampersands - Parentheses and ampersands shall not be used on the display and control panel or other crew equipment.

e. Slashes - The slash (/) shall be used in place of the words to indicate multiple functions.

9.5.3.1.14.3 Upper/Lower Case Design Requirements

a. Abbreviations - Lower case letters shall be used in abbreviations or symbols in which their use is the commonly accepted practice (e.g., He, pH, Hg, etc.).

b. Operating Instructions - Equipment operating instructions shall use lower case for text and upper case for the first letter of a sentence, headings, titles of equipment, and references to control/display panel markings.

9.5.3.1.14.4 Titles Design Requirements

(Refer to Paragraph 9.6.2.8k, Abbreviations and Acronyms, for additional requirements on the use of abbreviations.)

9.5.3.1.14.5 Special Character Design Requirements

a. Subscript and Superscript Size - Subscripts and superscripts shall be 0.6 to 0.7 times the height of associated characters.

b. Subscripts - Numeric subscripts and upper case letter subscripts shall be centered on the baseline of associated characters.

c. Lower Case Letter Subscripts - The base of lower case letters and the ovals of g, p, q, etc., shall be at the same level as the base of adjacent capital letters.

d. Degree Symbol - The degree symbol shall be centered on an imaginary line extended from the top of the F or C symbols.

e. Pound or Number Symbol (#) - The pound or number symbol shall be centered on an imaginary line extended from the top of the associated numerals and placed approximately two stroke widths away from them.

9.5.3.1.14.6 Character Height Design Requirements

a. Character Height - Character height depends on viewing distance and luminance level. At a viewing distance of 710 mm (28 in) the height of letters and numerals shall be within the range of values given in Figure 9.5.3.1.14.6-1.

b. Variable Distance - For a distance (D) other than 710 mm (28 in), multiply the values in Figure 9.5.3.1.14.6-1 by D/710 mm (D/28 in.) to obtain the appropriate character height.

c. Size Categories - Where feasible and appropriate, characters used in labeling shall be graduated in size. To determine character height, all nomenclature on a label may be divided into three categories: titles, subtitles, and text. The nominal heights at a viewing distance of 710 mm (28 in) for each category shall be:

1. Titles, 5 mm (0.19 in).

2. Subtitles, 4 mm (0.16 in).

3. Text, 3 mm (0.12 in).

In general, when moving to the next larger character size, the character height shall in-crease by approximately 25 percent.

d. Space Limitations - The use of the same size letters and numerals for all categories on a label is acceptable for solving space limitation and clarity problems. In this case, the height of lettering and numerals shall be not less than 3 mm (0.12 in).

Markings	Character Height	
	3.5 cd/m² (1 ft-L)	Above 3.5 cd/m² (1 ft-L)
For critical markings, with position variable (e.g., numerals on counters and settable or moving scales):	5-8 mm (0.20-0.31 in)	3-5 mm (0.12-0.20 in)
For critical markings, with position fixed (e.g., numerals on fixed scales, controls, and switch markings, or emergency instructions):	4-8 mm (0.16-0.31 in)	2.5-5 mm (0.10-0.20 in)
For noncritical markings (e.g., identification labels, routine instructions, or markings required only for familiarization):	1.3-5 mm (0.05-0.20 in)	1.3-5 mm (0.05-0.20 in)

Figure 9.5.3.1.14.6-1 Character Height- 710 mm (28 in) Viewing Distance

MSIS 106

9.5.3.1.14.7 Character Width Design Requirements

a. Letters - The width of letters shall preferably be 0.6 of the height, except the letter "I" which shall be one stroke in width, the letters "J" and "L" which shall be 0.5 of the height, the letter "M", which shall be 0.7 of the height, and the letter "W", which shall be 0.8 of the height.

b. Numerals - The width of numerals shall preferably be 0.6 of the height, except for the numeral "4", which shall be one stroke width wider and the numeral "1", which shall be one stroke in width.

c. Wide Characters - Where conditions indicate the use of wider characters, as on a curved surface, the basic height-to-width ratio may be increased to 1:1.

9.5.3.1.14.8 Stroke Width Design Requirements

a. Height-to-Stroke Ratio - Marking letters and numerals shall have a height-to-stroke ratio of 5:1 to 8:1, depending on the application.

b. Transilluminated Background - Opaque markings on a transilluminated lighted background shall have a height-to-stroke ratio of 5:1 to 6:1.

c. Transilluminated Markings - Transilluminated markings on a dark background or markings used on integrally lighted instruments shall have a height-to-stroke ratio of 7:1 to 8:1.

d. General Purpose Illumination - Characters used on display panels and equipment when viewed under general purpose flood lighting or normal daylight conditions shall have a height-to-stroke ratio of 6:1 to 7:1.

9.5.3.1.14.9 Character Measurement Design Requirements

a. Measurement - All letters and numeral measurement shall be made from the outside edges of the stroke lines for other than machine engraving on opaque surfaces.

b. Engravings - For all mechanical engraving on opaque surfaces, the dimension controlling the size of letters and numerals shall be measured from centerline to centerline of the stroke.

9.5.3.1.14.10 Spacing Design Requirements

a. Character Spacing - The spacing between letters within words and between digits in a multi-digit number shall be the approximate visual equivalent of one stroke width between two straight-sided letters such as H and I. (This requirement is intended to accommodate the normal commercial typographical practice of spacing letters to achieve a consistent visual continuity. This permits close spacing of open letters such as C and T to avoid large apparent gaps).

b. Word Spacing - The spacing between words shall be the approximate visual equivalent of the letter W between two straight-sided letters such as N and F.

c. Line Spacing:

   1. The spacing between lines of related text shall be 0.5 of upper case letter height.

   2. Spacing between headings and text shall be 0.6 to 1.0 of upper case letter height.

9.5.3.2 Coding Design Requirements

a. General Coding Requirements:

1. Standardization - The application of coding techniques shall be consistent within and between systems.

2. Clutter - Coding shall only be used where useful, as excessive coding can have the negative effect of adding to visual clutter.

3. Decrements - Coding shall not reduce legibility or increase transmission time.

4. Common Usage - Codes shall conform to conventional population stereotypes and general user expectations when these exist.

5. When feasible, meaningful codes shall be used rather than arbitrary codes. For example, use M for male and F for female rather than 1 for male and 2 for female.

b. Brightness Coding:

1. Brightness coding shall be employed to differentiate between an item of information and adjacent information.

2. No more than three levels of brightness shall be used. Each level shall be separated from the nearest by at least a 2:1 ratio.

c. Size Coding:

1. Symbols - Where size difference between symbols is employed, the major dimensions of the larger shall be at least 150% of the major dimensions of the smaller with a maximum of three size levels permitted.

2. Controls - No more than three different sizes of controls shall be used in coding controls for discrimination by absolute size. Controls used for performing the same function on different items or equipment shall be the same size.

d. Pattern Coding - Pattern coding shall be used to differentiate areas of interest to the observer (e.g., the normal, warning, and danger operating zones of a scale), and reduce operator search time.

e. Location Coding - Controls associated with similar functions shall be in the same relative location from panel to panel.

f. Shape Coding - Shape coding of controls shall be used to improve their identifiability through both the visual and tactile senses. Requirements are listed below.

1. Ease of operation - The coded feature shall not interfere with ease of control manipulation.

2. Position and orientation independence - Shapes shall be identifiable and differentiable by the hand regardless of the position and orientation of the control knob or handle.

3. Gloved operation - Shapes shall be tactilely identifiable when IVA gloves are worn, where applicable.

4. Mounting - Shape coded knobs and handles shall be positively and non-reversibly attached to their shafts to preclude incorrect attachment when replacement is required.

g. Underlining, Bold Face, Italics - Coding techniques shall be used when it is necessary to direct a reader's attention to a particular element of alphanumeric text. These techniques shall include, but not be limited to, underline, bold face type, and italics.

h. Flash Coding:

1. Use - The use of flashing lights shall be minimized, and used only where immediate attention is required.

2. Flash rate:

a) No more than 2 flash rates shall be used.

b) Where one rate is used, the rate shall be between 3 and 5 flashes per second.

c) Where two rates are used, the second rate shall be less than 2 per second.

3. Duty cycle - Flashing lights shall have approximately equal amounts of ON and OFF time.

4. Simultaneous signals - Flashing lights which could be simultaneously active shall have synchronized flashes.

5. Failure indication - If the indicator is energized and the flasher device fails, the light shall illuminate and burn steadily.

i. Color Coding - Color identification numbers used below are per FED-STD-595.

1. Color difference - Only one hue within a color category (e.g., reds, greens) shall be used in a given coding scheme, and that color shall always be associated with a single meaning.

2. Number of colors - No more than 9 colors, including white and black, shall be used in a coding system.

3. Ambient light:

a) Color coding shall be compatible with anticipated ambient lighting throughout the mission.

b) Color-coding shall not be used as a primary identification medium if the spectral characteristics of ambient light during the mission, or the operator's adaptation to that light, varies as the result of such factors as solar glare, filtration of light, and variation from natural to artificial light.

4. Familiar color meaning - Colors which are consistent with common usage and existing standards with respect to application are listed below. All color coordinates for transilluminated lighting are per CIE (Commission International del' Eclarirage Coordinates Chart Chromaticity Diagram 1931).

a) Red #21105 - Emergency, warning, and master alarm lights; safety controls; critical controls requiring rapid identification; emergency shutdown; control panel outline of a functionally critical emergency nature. Transilluminated devices shall have coordinates of x=.633 (+/-.03) y=.255 (+/-.03).

(Note: Under ambient red lighting, use orange-yellow and black striping.)

b) Yellow #33538 - Caution; emergency exits; safety controls associated with emergencies of a less critical nature. Transilluminated devices shall have coordinates of x=.455 (+/-.03) y=.550 (+/.03).

c) Yellow #33538 with black #37038 stripe - Immediate access; exit releases.

d) Orange #32246 - Hazardous moving parts; machinery; start switches, etc.

e) Green #14187 - Important and frequently operated controls having no urgent or emergency implications. Transilluminated devices shall have coordinates of x=.155 (+/-.05) y=.750 (+/-.05). Alternatively, for transilluminated devices, a wave length of 520nm is acceptable.

f) Green (Sage) #14260 - First aid and survival.

g) Blue #25102 - Advisory (not recommended for general use).

h) Purple #37142 (magenta) - Radiation Hazard.

i) White - Advisory (for transilluminated devices only) - Transilluminated devices shall have coordinates of x=.360 (+/-.03 y=.360 (+/-.03).

5. Color deficiency - To avoid confusion by color-deficient observers, do not use the color green if the color scheme uses more than six colors. If six or fewer colors including green #14260 and yellow are used, yellow #23655 shall be substituted for #33538. Red #11302 and blue #15177 may also be used; however, do not use red and green within the same complement.

6. Placards - The preferred markings and background color for placards are listed below.

Markings	Backgound
White	Black
Black	Yellow
Black	White
Yellow	Blue
White	Red
Blue	Yellow

7. Zone markings - On indicators where zone markings are used to indicate various operating conditions, the following requirements shall apply.

a) Primary colors shall be limited to red, yellow, orange, and green consistent with color selection criteria given above.

b) Zone markings shall be applied and located in a manner that facilitates easy removal.

c) Zone markings shall not interfere with the reading of quantitative markings.

d) When color is used to zone mark, the color shall be applied so that its meaning is consistent across applications.

8. Color Contrast - An important factor to consider when selecting colors is the contrast between various colors. This is necessary to ensure that each color is easily discriminated from the others. Although contrast is an important consideration, it should not be used without regard to other important factors such as convention or standard, inherent meaning, and consistency across displays.

a) The following color list shall be used to select colors that contrast maximally with the color just preceding it and satisfactorily with the earlier colors in the list. Colors (1) through (9) yield satisfactory contrast for red-green deficient as well as color-normal crewmembers. The remaining 13 are useful only for color-normal crewmembers.

(1) White.

(2) Black.

(3) Yellow.

(4) Purple.

(5) Orange.

(6) Light blue.

(7) Red.

(8) Buff.

(9) Gray.

(10) Green.

(11) Purplish pink.

(12) Blue.

(13) Yellowish pink.

(14) Violet.

(15) Orange-yellow.

(16) Purplish red.

(17) Greenish yellow.

(18) Reddish brown.

(19) Yellow-green.

(20) Yellowish brown.

(21) Reddish orange.

(22) Olive green.

b) Color contrast shall be selected in conjunction with color conventions and standards, inherent meaning, and consistency across displays.

9.6.2.2 Design Requirements for Data Display

a. Stand Alone - In general, data displays shall convey enough information to allow the user to interpret the data without referring to additional sources.

b. Shared Displays - If a single display monitor is used to display different categories of information alternately, none of the categories shall require continuous or concurrent monitoring.

9.6.2.3.2 Design Requirements for Text

a. Upper &Lower Case - Text shall be presented using upper and lower case letters.

b. Justification - The default condition shall be to left justify all lines of text; however, options for right justification and fill-justification shall be available.

c. User Control - Users shall have control over various features of text display: justification, line length, space between lines, margins, font style and size.

9.6.2.4.2 Design Requirements for Tables

a. Titles - All tables shall have a concise, descriptive title. Titles shall have a consistent location on tables.

b. Labels - Each group of data in a table shall have a concise, descriptive, label that is separated from other characters and can easily be identified as the label.

c. Consistent Widths of Characters - The fonts and widths of numeric characters shall be consistent within a table. Highlighting of numeric characters by means of italics or bolding shall not change the width of numeric characters. Differences in fonts and/or widths of alphabetic characters within a table shall not affect column or row size or spacing.

d. Grouping - All displayed data necessary to support a user activity or sequence of activities shall be grouped together.

9.6.2.4.3.2 Design Requirements for Matrix Tables

a. Use - Matrix tables shall be used to present row-column data.

b. Arrangement - Data in matrix tables shall be displayed in a left-to-right, top-to-bottom array. Alphanumeric data shall be left justified; numeric data shall be arranged with decimal points aligned vertically. (If a number does not have a visible decimal point, the decimal point shall be assumed.)

c. Column Order - Material most relevant to the user or most frequently used shall be in the left column and shall progress to the least relevant in the far right column.

d. Labels - Labels for the row variables shall be located in the left-most column; labels for the column variables shall be located in the top row. When a column extends over more than one "page" vertically (i.e., the user has to scroll or page to continue reading the column), the same column labels shall be displayed from "page" to "page". Similarly, when a row extends over more than one "page" horizontally (i.e., the user has to scroll or page to continue reading the row), the same row labels shall be displayed from "page" to "page".

e. Readability - In tables with many rows or columns, a blank line, dots, or other distinctive feature shall be inserted after every fifth row or column as appropriate to help maintain one's place across columns or across rows.

f. Organization of Rows and Columns - When possible, rows and/or columns in a table shall be arranged in a systematic order (e.g., chronologically, alphabetically, sequentially, by magnitude, by importance, or according to function).

g. Discriminable rows and columns - Each column shall be discriminable from every other column by means of a physical cue, such as sufficient blank space or a line. Similarly, all rows shall be discriminable from one another by means of physical cues.

9.6.2.4.4.2 Design Requirements for Functional Area Tables

a. Use - A functional area table shall be used to display related data that has a less regular structure than a matrix. The data are organized into functional groups, similar to a completed data form.

b. Group size - Related data shall be displayed in groups which subtend five degrees of visual angle or less. The groups shall be visually distinct from one another.

c. Density - The ratio of filled display character spaces to the total number of character spaces shall not exceed 30% under nominal operating conditions.

9.6.2.5.2 Design Requirements for Graphics

a. Use - Types of graphical displays include icons, schematics, data graphs, maps, flow charts, and pictures. Graphical displays shall be used when they will convey information to the user more clearly, effectively, or quickly than other formats. For example, graphics may be used as follows:

   1. A statistical data graph is appropriate when users need to monitor changing data, to scan a data set or sets quickly, to compare multiple sets of data, or to see trends in data.

   2. A flowchart is appropriate when users need to follow a sequence of events that involves logical branching or to observe the temporal order of events.

   3. A schematic is appropriate when users need to identify both the elements of a system and the spatial/temporal organization of those elements.

   4. A map is appropriate when users need to determine spatial relations between objects.

b. User control - The user shall have the ability to change various physical features of a graphic to enhance his or her viewing capability, including enlarging and reducing the graphic or a subsection thereof, increasing the amount of detail (if additional detail is available, e.g., in a system schematic), and selecting different orientations or reference points (especially for maps and schematics).

c. Simplicity - Graphical displays shall maintain the visually simplest display consistent with their function.

d. Directing the User to the Important Data - A graphical display shall direct the user's attention to the critical data. For example, users will notice heavier lines before lighter ones; brighter colors are detected before dim ones; larger bars are detected before slender ones. Use of these rules of thumb, as well as the use of coding techniques, will make for graphic displays that direct the user's attention to the desired location.

e. Identification of Graphic Displays - All graphic displays shall have unique, meaningful titles by which users can identify and access the display.

f. Identification of Elements in Graphics - All elements in graphic displays (including objects in a schematic, geographical locations in a map, and axes in a data graph) shall be identifiable and discriminable by the user. The two most prominent techniques for providing cues for identification are labeling and symbols.

   1. Labels shall be in close proximity to the object that they identify, but shall not obscure the element.

   2. In addition to or in place of labels, symbolic coding (e.g., texture, color, or shape) shall be used when appropriate to aid users in identifying elements of graphical displays . Symbolic codes shall be accompanied by legends that provide the symbol and its referent.

9.6.2.6.2 Design Requirements for Coding

a. Highlighting - Highlighting (display coding which serves only to call the user's attention to a feature of a display) shall be used only for important information (e.g., out-of-limit conditions). When conditions change and an item that was highlighted is no longer important (e.g., after an out-of-limits condition has been corrected), that item shall no longer be highlighted. The specific highlighting technique used (e.g., reverse video, brightness contrast, boldness contrast, underlining, or blinking) shall not have a detrimental impact on the user's perception of the display.

b. Grouping - Coding shall be used to group functionally similar information and to indicate membership in a common group. Grouping allows users to perceive a large screen as consisting of smaller identifiable pieces. Spatial distance and shape coding are particularly powerful grouping techniques.

1. Grouping of information shall be accomplished by spatial distance, shape coding, lines, color coding or other means consistent with the application.

2. Displays with high information density shall have an intermediate number of groups. The preferred range for number of groups is 19-40.

c. Symbols - Coding by means of graphic symbols, shapes, or color shall be a key method used to communicate the specific meaning of an element of a display to a user. The choice of a symbol shall not contradict highly overlearned associations (e.g., the use of red as a symbol for stop or danger and the use of an octagonal shape for stop).

1. As a symbolic code, color shall be redundant with at least one other coding technique.

2. Users shall have access to the referent for every symbol.

9.6.2.7.2 Design Requirements for Windows

a. Perceptual Characteristics of Windows - Windows are subdivisions of displays in which one functionally-related set of information is displayed. Windows shall be perceptually distinct from the rest of the display.

b. Types of Windows - Users shall be able to distinguish among different types of windows based on the perceptual characteristics of the window. Window types can be organized in a hierarchy based on their function: Open vs. Closed windows, where the user has perceptual and functional access only to the open window; Open windows can be Active or Inactive, where the active window contains an on-going activity, either user-maintained (e.g., a command language dialogue) or system-maintained (e.g., control of a Space Station Freedom subsystem by an expert system); Active windows can be an Interactive window (also known as the "listener") or a Noninteractive window, where the Interactive window is the one in which user actions have their effect.

c. Window Titles - A brief, unique, and descriptive title shall be positioned in a consistent and highly visible location for each window. The user shall be able to use that title in accessing the window.

d. Multiple Windows - When multiple windows are open simultaneously, with the exception of caution & warning information, the system shall not overwrite the active window(s).

9.6.2.8 Design Requirements for Format

a. Consistency - Display formats shall be consistent within a system.

1. When appropriate for users, the same format shall be used for input and output.

2. Data entry formats shall match the source document formats when feasible and efficient for user performance.

3. Recurring data fields within a system shall have consistent names and shall have consistent relative positions within displays.

b. Standardization - The content of displays within a system shall be presented in a consistent, standardized manner.

c. Information Density:

1. Information density shall be held to a minimum in displays used for critical tasks.

2. A minimum of one character space shall be left blank vertically above and below critical information, with a minimum of two character spaces left blank horizontally before and after.

d. Selectable data display - Only data essential to the user's needs shall be displayed. The system shall permit the user to access any data at any time.

e. Readily Usable Form - Data presented to the user shall be in a readily usable and readable form such that the user does not have to transpose, compute, interpolate, or mentally translate into other units, number bases, or languages.

f. Order and Sequences - When data fields have a naturally-occurring order (e.g., chronological), such order shall be reflected in the format organization of the fields.

g. Extended Alphanumerics - When five or more alphanumeric characters without natural organization are displayed, the characters shall be grouped in blocks of three to five characters, separated by a minimum of one blank space or other separating character, such as a hyphen or slash.

h. Comparative Data Fields - Data fields to be compared on a character-by-character basis shall be adjacent. Relative position shall maximize ease of comparison.

i. Labels and Title:

1. Each individual data group, message, or window shall contain a descriptive title, phrase, word, or similar identifier to designate the content of the group or message.

2. Labels and titles shall be located in a consistent fashion adjacent to their referent; the relation between the label or title and referent shall be clearly visible.

3. Labels and titles shall be emphasized to facilitate user scanning and recognition. The technique used for emphasis (e.g., highlighting, see Section 9.6.3.1.4.a) shall be easily distinguishable from that used to highlight or code emergency or critical messages. Labels and titles shall not be confusable with data.

4. The physical features and wording of labels and titles shall be designed to avoid confusion as to whether the label is for a data entry field, a control option, a guidance message, or other displayed materials.

5. Labels and titles shall be unique to avoid confusions between labels.

6. When presenting a list of user options, the label shall be descriptive of the contents of the list and relevant to the task being performed by the user.

j. Identifying Location in Sequence of Displays - Cues shall be provided to the user to identify the currently displayed page and the total number of pages of a multiple page display (e.g., in a text file, the second page of a five page file might be labeled Page 2 of 5).

k. Abbreviations and Acronyms:

1. Information shall be displayed in plain concise text wherever possible.

2. Abbreviations and acronyms shall be standardized.

3. Abbreviations shall be distinctive to avoid confusion.

4. A single word shall have no more than one abbreviation.

5. No punctuation shall be used in abbreviations.

6. Where practical, definitions of all abbreviations, mnemonics, and codes shall be provided on-line at the user's request. If on-line capability is not provided, definitions shall be provided in hardcopy.

l. Number System - When numeric data are displayed or required, such data shall be in the decimal number system by default. Users shall have the ability to change the number system according to their task demands.

9.6.2.9.2 Design Requirements for Information Display Rate

a. Information Display Rate - The information display rate shall not exceed human perception, comprehension, or response capabilities.

b. Update Rate:

1. The rate of update of information within a display shall be a function of both task requirements and user capabilities.

2. The rate of update of information shall not exceed the user's ability to perceive changes in values of parameters.

3. For slowly changing data, the system shall aid the user in attending closely to the display and in eliminating the need for extended fixation of the display.

4. Items requiring dynamic visual acuity on a graphic display shall not move faster than 60 degrees of visual angle per second, with 20 degrees per second preferred.

c. Display Freeze:

1. A display freeze mode shall be provided to allow close scrutiny of any selected display that is updated or advanced automatically by the system.

2. An option shall be provided to allow the user to either resume the update of information from the point at which the display was frozen or at the current real-time point.

3. An appropriate label or iconic symbol shall be provided to indicate to the user that the display is in the freeze mode.

d. System Response Time - Whenever possible, the time for the system to respond to a user command or request shall not exceed 2 seconds.

e. Keystroke Echo Response Time - Whenever possible, keystroke echo response time shall not exceed 0.1 second.

9.6.3.1.2 Design Requirements for User-Computer Dialogues

a. Dialogue Type - The choice of the type of dialogue between the user and computer (e.g., command language, menus, data forms, direct manipulation) shall be compatible with user characteristics and task requirements. The human-computer dialogue for any task shall allow users to execute commands in terms of the functions to be performed without concern for internal computer data processing, storage, or retrieval mechanisms.

b. Multiple dialogues - To the greatest degree possible, users shall be able to input commands to the system using any of the available dialogue types and shall be able to switch between dialogue types within a task sequence.

c. User Viewpoint - User-computer dialogue techniques shall reflect the user's point of view such that the commands are logically-related to the user's conception of what is being done.

d. Feedback from commands:

1. When the completion of a command results in a consequence that is perceptible to the user, the completion of the commanded action shall be the only necessary feedback.

2. Rather than simply rejecting the entry, the system shall permit users to correct errors in commands, where feasible.

3. When the completion of a command results in a consequence that is not visible to the user, the system shall provide explicit feedback to the user that the command was completed. The feedback shall be in the form of a message that describes the actions that resulted from the command in simple, direct, positive language.

e. Arm-Fire Sequence for Critical Commands - Users shall have to confirm that they want to perform a critical, potentially hazardous, or potentially destructive command (including commands that would destroy stored data) before the system will execute it. The confirmation request from the system to the user shall be positive, simple, and direct.

9.6.3.1.3.2 Design Requirements for Command Language

a. Use - All users shall always have access to the command language. Additionally, the command language is especially well suited for

1. Tasks with an elaborate interaction between the user and system.

2. Highly trained, frequent system users.

b. Standardization - The functionality, design, and operation of the command language shall be standard. The standardization of the language shall include the lexicon, semantics, and syntax.

c. Command Language Terms - To the greatest degree possible, the meaning of terms in the command language shall correspond to English and be conveyed in a form such that additional resources are not required to interpret the message. The terms in the command language shall describe actions, objects, prepositions, and the attributes of actions or objects.

d. Command Language Syntax - The structure of the command language shall resemble the structure of English as closely as possible.

e. Distinctiveness - Command language terms shall be perceptually and semantically distinct from one another.

f. Punctuation - The command language shall contain a minimum of punctuation or other special characters.

g. Truncation - The user shall be able to enter the full command name or the system-specific truncated form. Truncated forms may consist of unique partial command terms, function keys, and command keystrokes.

h. Command Area - Commands shall be entered and displayed in a standard command area in a consistent location on all displays.

i. Command Prompts - The user shall be able to request prompts, as necessary, to determine required parameters in a command entry.

j. Command Editing - Editing of commands shall follow the same rules as text editing.

k. Alternative Constructions - If users input alternative syntax or synonymous command language terms, the system shall aid the user in completing the command correctly.

9.6.3.1.4 Design Requirements for Command Keystrokes

a. Uses - Command keystrokes (i.e., the use of a limited number of keystrokes combined with pressing a Command Key to access a command language term) shall be used primarily in cases where speed of command inputs is important. Other dialogue techniques shall be available, as appropriate.

b. Consistency across applications - The structure and meaning of keyboard commands shall be consistent across applications.

9.6.3.1.5 Design Requirements for Function Keys

a. Uses - Function keys shall command an action with a singular keypress and shall not require any other preceding or simultaneous keystroke (e.g., pressing a Command Key). Function keys shall be used for tasks with unique control entries or as an adjunct to other dialogue types for functions that occur frequently, that must be made quickly, and that must be made with minimal syntax errors.

b. Consistency across applications - The consequence of pressing a fixed function key shall be consistent across applications.

9.6.3.1.6.2 Design Requirements for Menus

a. Menu Item Selection:

1. The user shall be able to select a menu item with minimal activity.

2. When selection is to be accomplished by cursor placement on the to-be-selected item, the system shall aid the user in cursor placement. For example, for a permanent menu, the cursor would be placed on the most likely option, usually the first position.

3. Where design constraints do not permit cursor placement, a standard input area shall be provided for the user to key the selected option code.

b. Presentation of Menu Items - Menu items shall be presented in a list format. Each menu item, along with any associated information (e.g., selection codes and descriptors), shall be displayed on a single line.

c. Organization of Menu Items - Menu items shall be organized in a logical order (e.g., similarity of function, expected frequency of use, temporal ordering of the task). If no logical basis exists for ordering items, an alphabetical order shall be used.

d. Coding of Menu Items:

1. When users have the capability to select a menu item by means of a coded entry, the code associated with the menu item shall be indicated on the display in close spatial proximity to the menu item.

2. Codes used to select menu items shall be related to the menu item so that users do not have to learn arbitrary codes.

3. If menu items are selectable by means of function keys, the arrangement of the function keys and menu shall be compatible.

e. Selectable Items Discriminable From Nonselectable Items - Menu items that are available to be selected by the user shall be visually different from menu items that are not available in a given application or step in a task.

f. Format Consistency - Menu formats shall be consistent throughout the system.

g. Menu Availability - Menus shall be readily available to the user at all times.

h. Movement Through Menu Hierarchies:

1. The user shall have the capability to traverse menu hierarchies forward and backward.

2. If several levels of menu hierarchy are presented, the user shall be able to move from one level to any other level without having to step through multiple menu level.

3. The system shall provide visual cues that indicate the path that the user has travelled through a hierarchy of menus.

i. Feedback:

1. When a menu item is selected, an immediate indication that the intended item was selected shall be given. This indication shall not be confusable with other kinds of display coding.

2. When selection of a menu item results in a continuing condition (e.g., turning on a pump which stays on until commanded to be shut off), a visual indication, clearly associated with the specific menu item, shall be provided to the user during the time that the condition continues.

j. Types of Menus - Menus shall be available either as permanent menus or as user-requested menus ("user-requested menus" are menus which are present only when the user specifically asks for them, e.g., pop-up or pull-down menus). The type of menu shall be a function of the task requirements.

9.6.3.1.6.3.2 Design Requirements for Permanent Menus

Permanent menus shall be used when:

a. The user needs to see the menu items throughout a task.

b. The user needs to examine every option in detail.

c. The user does not have the ability to request that a menu be displayed (e.g., in the absence of a pointing device).

d. The use of a user-requested menu would obscure information needed for a task.

9.6.3.1.6.4.2 Design Requirements for User-Requested Menus

a. Use - User-requested menus shall be used when:

1. Display space is limited.

2. Users need to see the menu items only when selecting them.

3. Information required by the user would not be obscured by the menu.

b. Menu design:

1. The height of a menu bar (used to permit the user to request a menu) shall be sufficient to contain standard text characters which serve as the menu labels.

2. Menu labels on the menu bar shall be brief, descriptive of the contents of the menu, physically separated from other menu labels, and semantically distinctive from other menu labels.

3. Menu bars shall be placed in a consistent location in all displays.

4. The organization of categories across the menu bar shall be logical (e.g., according to function or frequency of use).

c. Activation - User-requested menus shall be displayed only after a single, specific action by the user. After the menu option has been selected, the menu shall revert to its hidden state.

9.6.3.1.7.2 Design Requirements for Direct Manipulation

a. Philosophy of Direct Manipulation - In the direct manipulation interface, the user shall be able to manipulate data structures or objects directly by physically interacting with their graphical representation

b. Features of Direct Manipulation - The direct manipulation interface shall have the following characteristics:

1. The objects of interest have continuous graphical representations (e.g., as icons and windows).

2. The users accomplish functions by means of physical actions with the objects instead of by language-based commands. Two primary physical actions are selecting an object and moving an object.

3. Operations are rapid, incremental, and reversible. The impact of an operation on the object of interest is immediately visible.

c. Use - Direct manipulation shall be among the dialogue techniques used for tasks where:

1. Users have different languages.

2. The task objects and actions lend themselves to iconic representation.

3. Users are not highly practiced with the task.

9.6.3.1.7.3.2 Design Requirements for Icons

a. Icon Design :

1. The icon shall pictorially represent the object or action. (An icon is a pictorial, pictographic, or other symbolic representation of a software object or an action by the system. A user's direct manipulation of the icon is equivalent to manipulating the software object or executing the system action.)

2. Icons shall be identifiable and discriminable.

3. Icons that the user can select shall be sufficiently large enough to minimize selection time and errors.

4. Icons shall be simple, closed figures.

5. Icons shall be accompanied by text labels which correspond to the term from the command language that describes the same object or action. The text label shall be clearly associated with the icon without obscuring the visual representation.

b. Consistency - Visual features, meanings, and specific uses of icons shall be consistent within and among applications.

c. Feedback - Selecting an icon shall be acknowledged by highlighting the icon in such a way that the icon is not visually obscured. The icon shall remain highlighted during the time that it is selected.

9.6.3.1.7.4 Design Requirements for Actions in the Direct Manipulation Interface

a. Movement and Selection - Users shall be able to move the pointing cursor to and select icons by the use of any available cursor control device (e.g., X-Y controllers and arrow keys).

b. Opening - A user shall be able to "open" a selected icon by a single unique action.

c. Initiating a Process - Users shall be able to initiate the process related to an icon (e.g., opening a file or launching an application) in multiple ways: Opening the selected icon; connecting an object icon to an action icon; or selecting an icon and entering a command, e.g., via the command language, command keystrokes, or menu.

9.6.3.1.7.5.2 Design Requirements for Interactions with Windows

a. Control Over Window Dimensions- Users shall be able to change the horizontal and vertical dimension of windows independently by direct physical action on the window.

b. Control Over Window Location - Users shall be able to move windows to different locations on a display by direct physical action on the window. However, users shall not be able to move a window where it interferes with the user's ability to interact with the system or with caution and warning information.

c. Opening and Closing a Window - Users shall be able to open or close a window by direct physical action on the window.

d. "Popping" Windows - In a layered windowing environment, users shall be able to move a window in a stack to the prominent position in the stack so that its contents are visible (known as "popping" the window to the front).

9.6.3.1.8.2 Design Requirements for Data Forms/Form Filling

a. Use - The primary uses of data forms shall be for data entry and computer command tasks in which information needed by the user is displayed and the user has to complete a form.

b. Grouping - Displayed forms shall be arranged such that related items are grouped together.

c. Format and Content Consistency - If paper forms and computer-displayed forms are used in concert in a data entry task, the format and content of the two types of forms shall be compatible, within the constraints of the task and the differences in information format.

d. Distinctiveness of Fields - Fields or groups of fields shall be separated by lines or other delineation cues. Required fields shall be distinguished from optional fields.

e. Field Labels - Field labels shall be distinctively presented such that they can be distinguished from both data entry fields and data entered by the user. Labels for data entry fields shall incorporate additional cueing of data format where the entry is made up of multiple inputs [e.g., TIME (HH/MM/SS):(__/__/__)].

f. Cursor Placement - When the form is displayed, a displayed cursor shall be positioned by the system at the first data entry field to which the user has to provide input. The system shall advance the cursor to the next data field when the user has completed entry of the current field. The user shall also have the ability to move the cursor to the next field, to the previous field, or, independently, to any field on the form.

g. Actions for Movement and Completion - Distinctly different actions shall be used for:

   1. Movement of the cursor forward to the next field.

   2. Movement backward to a previous field.

   3. Placing the cursor in a noncontiguous field.

   4. Indicating that the input to the form is completed.

h. Entry Length Indication - The maximum acceptable length for variable length fields shall be indicated on that field. However, when the item length is variable, the user shall not have to remove unused underscores.

i. Overwriting - When data entry by overwriting a set of characters in a field is used, clear designation of overwritten characters (e.g., by reverse video) shall be provided.

j. Dimensional Units - When a consistent dimensional unit is used in a given entry field, the dimensional unit shall be provided and displayed by the system.

k. User Omissions - When required data entries have not been input, the omission shall be indicated to the user, and either immediate or delayed input of the missing items shall be allowed. For delayed entry, the user shall be required to indicate to the system (e.g., by entering a special symbol in the field) that the missing item is delayed, not overlooked.

l. Non-Entry Areas - Non-entry (protected) areas of the display shall be designated. In the absence of authorization of the user, those areas shall be made inaccessible.

m. Prevent Entry of Inappropriate Characters - An attempt to enter an inappropriate character into a field (e.g., entering an alphabetic character into a field reserved for entry of numeric characters) shall result in feedback from the system (e.g., an auditory signal and/or an error message).

9.6.3.1.8.3 Design Requirements for Default Values for Data Forms

a. Default Values - Default values shall be used to reduce user workload. Currently defined default values shall be displayed automatically in their appropriate data fields with the display of a form.

b. Default Modification - The user shall have the capability of changing default values and having those modifications retained by the system beyond that user interaction or session (i.e., until changed by another specific user action).

c. Default Substitution - The user shall be able to replace any default value during a given transaction without changing the default definition.

d. User Confirmation - If required, user acceptance of stored data or defaults shall be possible by a single confirming keystroke.

9.6.3.1.9.2 Design Requirements for Question and Answer

a. Use - The uses for question and answer dialogues shall include:

   1. Highly constrained tasks in which each step of the task sequence has few choices available.

   2. Routine data or command entry tasks in which the user needs explicit prompting.

b. Structure:

1. The system shall provide the user with a specific request for information. A question mark shall be the delimiter of the question from the system.

2. The system shall provide the user with contextual information (e.g., units of measurement used in the answer) required for answering the question.

3. The area in which the user can enter the answer shall be provided following the question as closely as possible.

4. The system shall accept as much information as is provided by the user. If the input by the user is to be severely limited, a data form shall be used.

5. The system shall display related questions (and their associated answers) simultaneously. Unrelated questions (and their associated answers) shall be displayed separately.

9.6.3.1.10.2 Design Requirements for User-definable Macros

a. The system shall allow the user to group related or sequential control or command entries into one operation known as a user-definable macro.

b. The system shall not allow users to define system-level macros (i.e., macros that can be used across two or more applications). System level macros shall be defined only by software developers.

c. The system shall provide to the user a macro-defining option which would impose a common syntax on all command strings within macros.

d. The system shall prohibit a user from modifying a macro that was defined by a different originating user.

e. When a user creates a macro, the system shall not allow a user to duplicate macro names.

f. The system shall provide users with access to an index of macros and each macro's command listing.

9.6.3.2 Design Requirements for Movement Within User Interfaces

a. Users shall be able to move the locus of their input or attention within a display by means of a pointing cursor. A placeholding cursor shall be available for location of placement in a display used for input of alphanumeric characters.

b. Users shall be able to move displayed information from the same data file by scrolling (i.e., the continuous vertical or horizontal movement of displayed information) and paging (the discrete movement from one "page" to another in an information display).

c. Users shall be able to locate and move to specific information in a data file.

9.6.3.2.1 Design Requirements for Position Designation (Cursor)

a. Control - Systems employing cursors shall provide cursor control capability consistent with user speed and accuracy requirements.

b. Locating - All cursors shall be distinctive against all backgrounds and shall be easy to locate at any position on a display.

c. Tracking - The cursor shall be easy for the user to track as it is moved through the display.

d. Distraction - The cursor shall not distract or impair the user during the search of the display for information unrelated to the cursor.

e. Data Entry - An "enter" action for data items shall result in the entry of all appropriate items (e.g., all data input to a data form or all text written in a text file) regardless of the placement of the cursor. The user shall not be required to move the cursor to any arbitrary position on the display (e.g., the top left or bottom right of the display).

f. Home Position - The home position for the cursor shall be consistent across similar types of displays.

g. Unique Shape - The shapes used for cursors shall be unique with respect to all other display structures. Cursors of different shapes shall be used for different purposes; the relation between a cursor shape and function shall be consistent across applications.

h. Types of Cursors - Users shall have access to two functionally different types of cursors -- a pointing cursor and a placeholding cursor.

9.6.3.2.1.1 Design Requirements for Pointing Cursor

a. Display Priority - The pointing cursor shall be available to the user at all times. The pointing cursor shall obscure other characters unless this would interfere with user performance.

b. Visual Characteristics:

1. The pointing cursor shall not blink.

2. The pointing cursor shall maintain its size and image quality across all screen and display locations.

3. To the greatest degree possible, the pointing cursor shall be completely graphic and shall not contain a label.

c. Gross Movement:

1. The movement of the pointing cursor shall be systematically related to the movement of the cursor control device (e.g., a trackball, a joystick, a mouse, or cursor control keys).

2. The pointing cursor shall not move in the absence of input from the user.

3. The movement of the pointing cursor shall appear to be smooth and continuous with smooth and continuous movement of the cursor control device.

d. Fine Positioning - When fine positioning accuracy is required, the displayed cursor shall include an appropriate point designation feature (e.g., crosshairs).

9.6.3.2.1.2 Design Requirements for Placeholding Cursor

a. Non-Interference - The placeholding cursor shall not interfere with the reading of the character that it marks.

b. Number of Placeholding Cursors - There shall be one and only one placeholding cursor in each window in which a user is entering alphanumeric characters.

c. Visual Characteristics:

1. The placeholding cursor shall assume the height or width of the alphanumeric characters adjacent to it.

2. If the placeholder cursor blinks, the default blink rate shall be 3 Hz. A user-selectable blink rate shall be within the range of 3 to 5 Hz.

9.6.3.2.2 Design Requirements for Scrolling

a. Method of Scrolling - Users shall be able to scroll by only one method within an application - either by "moving text" (i.e., the information in the display appears to move over a fixed display window) or by "panning" (i.e., a window appears to move over a fixed display of information. Panning shall be the preferred method.

b. Scroll Rate - The scroll rate shall allow the user to scroll in an increment of a line and shall provide the appearance of a smooth flow of text.

c. Direction of Scrolling - The direction that a user may scrolling shall be evident before the user begins the scroll action (e.g., arrows might point in the direction that corresponds to the direction that scrolling will occur).

d. Numbering - Items continued on the next page (scrolled to) shall be numbered relative to the last item on the previous page.

9.6.3.2.3 Design Requirements for Paging

a. User Control - Users shall have control over paging by use of any of several methods (e.g., dedicated paging function keys and a display-based paging icon).

b. Paging Increments - Users shall be able to move in increments of one or multiple pages.

c. Page Numbering - Each page of a multiple page display shall be numbered to identify the currently displayed page and the total number of pages.

d. Direction of Paging - The direction that a user may page shall be evident before the user begins to page (e.g., separate, labeled function keys might be used for paging forward and paging backward).

9.6.3.2.4 Design Requirements for Searching

a. Objects of Search - Users shall be able to search for and move to :

   1. A specific line number.

   2. A literal string of alphanumeric characters.

b. Multiple Occurrences - Users shall be able to find multiple occurrences of a literal string.

9.6.3.2.5.2 Design Requirements for Hypertext

a. Restricted Access to Authoring - Users shall only have access to authoring tools (i.e., tools that allow users to create modify, or delete the representation of information or links between information) if they need to have the power of those tools. Users that only need to browse (i.e., search through a database to obtain information contained in the nodes by following links between nodes), shall not have access to authoring tools.

b. Browsing Tools - Browsing tools shall generally use a question and answer dialogue.

9.6.3.3 Design Requirements for Manipulating Data

Data Manipulation - The user shall be able to manipulate data without concern for internal storage and retrieval mechanisms of the system.

9.6.3.3.1.2 Design Requirements for Editing

a. Use - Users shall be able to edit only selected data files (e.g., files that they create and files specifically designated as read/write). Certain files shall be uneditable by the user. Editable files shall be clearly distinguishable from noneditable files.

b. Methods - For all editable files, the user shall be able to edit text, tables, graphics, and any other data by means of any of several methods (e.g., command language commands, command keystrokes, and menus).

c. Consistency of Procedures - All editing procedures shall be consistent in dialogue structure, independent of the type of information being edited.

d. Modifying Physical Features:

1. The user shall have the ability to change the physical characteristics of text (e.g., the font type and size, italics, underlining, boldness, and capitalization).

2. The user shall have the ability to set and modify the tab position for user-modifiable text files.

3. The user shall be able to set and modify the margins for user-modifiable text files.

e. Insert Mode vs. Overstrike Mode - By default, the text editor shall operate in insert mode. Text shall be inserted moving to the right. However, the user shall be able to select text to be overstriken.

f. Selecting Data:

1. Users shall be able to select any editable data in any type of displayed data file (including text, tabular, or graphical) for specific editing functions (e.g., cutting, deletion, copying) with no more than two actions.

2. The selected data shall be visually distinct from non-selected data.

3. Users shall be able to remove selected data from the selected state with a single action.

g. Cutting Data:

1. Users shall be able to remove any editable data from a displayed data file by means of a "Cut" capability.

2. After the data are removed, the text or tabular display shall be reconstituted without a gap where the data were cut. Graphical displays shall be reconstituted with a gap where the graphical data were removed.

3. Users shall be able to place data that was most recently cut at any unrestricted location in any data file. Certain locations may be restricted from insertion of cut (or copied) data (e.g., menus or the system-originated parts of data forms).

h. Copying Data - Users shall be able to copy any editable data and replicate it at any unrestricted location in any data file.

i. Deleting Data - Users shall be able to delete previously-selected data by simple actions different from other editing functions (e.g., a dedicated "delete" command or function key).

1. Deletion of data shall be reversible for a limited period.

2. Deletion of critical data shall be protected by use of an "arm-fire" sequence, in which the user has to acknowledge that the system should delete the data.

9.6.3.3.1.3 Design Requirements for Graphics Editing

a. Editing Objects - Selection of a graphical object for editing shall be a function of the type of object: Icons shall be selected as a whole object; partial *selection shall not be permitted for icons. For editable schematics, maps,* flowcharts, data graphs and pictures, users shall be able to select for editing any object within the graphical display.

b. Moving - Users shall be able to move a previously selected object from one position on a display to another. An indication of the path of movement shall be provided to the user during the move.

c. User shall have the ability to increase and decrease the size of graphical objects that have previously been selected.

d. Users shall be able to rotate objects that have previously been selected. Users shall be able to rotate objects clockwise or counterclockwise. An indication of the path of rotation shall be provided to the user.

9.6.3.3.2 Saving

9.6.3.3.2.2 Design Requirements for Saving

a. Saving Data - The user shall have the ability to save data entered into an editable data file:

   1. While continuing to interact with that file .

   2. While simultaneously exiting from that file. Two different simple actions shall be used for these two different types of saving data.

b. Exiting a File - The user shall be able to exit a data file at any time without saving the changes to the file.

9.6.3.4.1 Design Requirements for Consistent Terminology

Consistent Terminology - On-line documentation, off-line documentation, and help instructions shall use consistent terminology.

9.6.3.4.2.2 Design Requirements for User Feedback

a. Use - Clear and concise feedback shall be provided to users as necessary to provide status information throughout the interaction.

b. Function Status - Feedback shall indicate actual function status.

c. Standby - If a system process (or processes) is time-consuming and causes the screen and input devices to be locked out, a progress message shall be displayed and updated, if possible, advising the user of the time remaining for the task or of the percentage of the task completed.

d. Process Outcome - When a control process or sequence is completed or aborted by the system, positive indication shall be presented to the user concerning the outcome of the process and the requirements for subsequent user action.

e. Input Confirmation - Confirmation of user input shall occur without removing the data display.

f. Highlighted Option Selection - Highlighting of data, a message, a menu item, an icon, or other display structure shall be used as feedback by the system to acknowledge that the user has selected the item.

g. User Input Rejection - If the system rejects a user's input, feedback shall be provided to indicate :

   1. The reason for rejection.

   2. The required corrective action.

   3. Where appropriate, the location of the problem.

9.6.3.4.3.2 Design Requirements for System Status Messages

a. Operational Mode - The system shall inform the user of the current operational mode when the mode might affect the user's actions.

b. System Changes - The system shall inform users about system design or system operation changes only in those aspects that may affect the user's interaction with the system.

c. Characteristics of Status Messages:

1. Status messages shall be provided to the user in a consistent location on the display.

2. The message shall contain only the information needed by the user, and conveyed to the user in a form such that additional resources are not required to interpret the message, e.g.:

a) A description of the system state.

b) Directives for user action.

c) The consequences, if any, of failing to follow the directives.

3. If the user will not be able to look at a display, the message shall be presented by means of a voice production system and shall be repeatable.

4. If the user needs to be alerted that a status message is being displayed, status messages shall be accompanied by a consistent auditory signal. The auditory signal shall be redundant with the linguistic message.

9.6.3.4.4 Design Requirements for Error Handling

a. Error Correction - The system shall provide users with a simple and easy capability to correct errors in input. Users shall be able to correct individual errors in a command string, sequence of commands, or data file by replacing only the erroneous input without having to re-enter correct input.

b. Early Detection - A capability shall be provided to facilitate detection and correction of errors before they are entered into the system. In order to avoid disrupting the user, error checking shall occur at the earliest logical break in the user's command or data input (e.g., at the end of a data field or the end of a command).

c. Timing of Feedback - If a user makes an incorrect command or data entry, the system shall detect the error and notify the user within two seconds from command or data entry.

d. Internal Software Checks - User errors shall be minimized by the use of internal software checks of user entries for the validity of the item, the sequence of entry, completeness of the entry, and the range of the value.

e. Error Message Content:

1. Error messages shall be informative, brief and conveyed to the user in a form such that additional resources are not required to interpret the message.

2. The error message shall be self-contained: The user shall not have to refer to external documents in order to interpret the error message.

3. The error message shall be constructive and neutral in tone, avoiding phrases that suggest a judgment of the user's behavior.

4. To the greatest degree possible, the error message shall reflect the user's need for information and concept of the system, not those of the person who develops the message.

5. Error messages shall be appropriate to the user's level of training and shall be as specific as possible to the user's particular application.

6. Error messages shall explicitly provide as much diagnostic information and remedial direction as can be inferred reliably from the error condition.

f. Error Recovery and Process Change - The user shall be able to stop a process at any point in a sequence as a result of an indicated error. The user shall be able to return easily to any step in a multi-step process in order to nullify an error or to effect a desired change.

g. Correction Entry and Confirmation - When the user enters correction of an error, such corrections shall be implemented only by an explicit action by the user (e.g., actuation of an "Enter" key). All error correction by the user shall be acknowledged by the system, either by indicating that a correct entry has been made or by another error message if an incorrect entry has been made.

h. Spelling Errors:

1. Spelling and other common errors shall not produce valid system commands or initiate transactions different from those intended.

2. When possible, the system shall recognize, but not execute, common misspellings of commands. Computer-corrected commands, values, and spellings shall be displayed and highlighted for user confirmation prior to execution.

i. Errors in Stacked Commands:

1. To prompt for corrections of an error in stacked commands, the system shall display the stacked sequence with the error highlighted.

2. Where possible, a procedure shall be provided to correct the error and salvage the stack.

j. Location of Error Messages - Error messages shall be placed on the display close to the point of the error and/or in a designated, consistent area of the display.

9.6.3.4.5.2 Design Requirements for Prompts

a. Use - Where appropriate, prompts and help instructions shall be used to explain commands, error messages, system capabilities, display formats, procedures, and steps in a sequence.

b. Standard Display - The location of prompts for data or commands shall be at the location of the desired input whenever possible. When the prompt cannot be placed at the location of the input, it shall be located in a standard message area.

c. Prompt Language:

1. Prompts shall be explicit, and the user shall not be required to memorize lengthy sequences or refer to secondary written procedural references.

2. Prompts shall be conveyed to the user in a form such that additional resources are not required to interpret the message. They shall not require reference to coding schemes, external documentation, or conventions which may be unfamiliar to occasional users.

9.6.3.4.6.2 Design Requirements for On-Line Instruction

Access to On-Line Documentation - For instruction, users shall have access to on-line documentation and descriptions of procedures.

9.6.3.4.7.2 Design Requirements for On-Line Help

a. Access to Help at Any Point in a Transaction - Users shall be able to access the Help function at any point in their interaction with the system. Access of help shall be by any of several methods, including

   1. Help provided automatically by the system when users make repeated frequent errors.

   2. Input of a command language request for help.

   3. Actuation of a "help" function key.

   4. Selection of a help option in a menu.

b. System Response to Help Request - A help request from the user shall elicit a task specific and context sensitive response from the system.

c. Levels of Help - The Help function shall provide information at a level of detail that matches the needs of the user. The user shall first receive summary information about the requested topic, then can request additional detailed information in a specific subtopic or subtopics.

d. Definitions Available - A dictionary of abbreviations, acronyms, and codes shall be available through the Help function, where feasible. Definitions of allowable options and ranges of values shall be displayed at the user's request where feasible.

e. Help about User Dialogues - At the user's request, the Help function shall provide the user with basic information about the semantics and syntax of any available user dialogue. Basic information shall include a structured listing containing each command, the associated keystroke commands and menu options, and the uses or consequences of the command.

f. Language of Help Messages:

   1. Help messages shall be explicit, and the user shall not be required to memorize lengthy sequences or refer to secondary written procedural references.

   2. Help messages shall be conveyed to the user in a form such that additional resources are not required to interpret the message.

   3. Help messages shall not require reference to external documentation.

9.6.3.5 Design Requirements for Sequence Control

a. Hierarchical Process:

   1. When hierarchical levels are used to control a process or sequence, the number of levels in depth in the hierarchy shall be minimized.

   2. Display and input formats shall be similar within levels, and the system shall indicate the current positions within the sequence at all times.

   3. Where it is appropriate for an experienced user to skip levels in a hierarchy, this capability shall be built in.

b. Interrupt:

   1. User interrupts, processing aborts, and processing resumptions shall be allowed by the system. These actions shall not be modified by stored data.

   2. The users shall be able to leave the system and store their work so that, on reentry at a later date, they can resume where they left off.

9.6.4.2 Design Requirements for User Input

a. Consistent Consequences of User Input - The consequences of any user input shall be consistent:

   1. For any individual user across time .

   2. From user to user.

b. Relation of Input to Consequence - The consequences of the user's input shall be both logically and temporally linked to the input action so that the user can learn to predict what will happen following the input action.

c. Input via a Variety of Devices - System design shall not impose on the user the use of a specific input device when other devices are available and appropriate. However, users shall not be required to switch among multiple devices to perform the same function within a task.

d. Computer Failure - In the event of computer failure, the program shall allow for orderly shutdown and establishment of a check-point so restoration can be accomplished without significant loss of computing performed to date.

9.6.4.3 Design Requirements for Data Entry Design

a. Learning - The requirement to learn mnemonics, codes, special or long sequences, or special instruction shall be minimized.

b. Abbreviations, Mnemonics, Codes, and Acronyms - When abbreviations, mnemonics, codes, or acronyms are used to shorten data entry, they shall be distinctive and have a relationship or association to normal language or specific job related terminology.

c. Length of Data Entries - The length of individual data items that are part of a required data input shall not be longer than is practicable, (e.g., difficult to remember while typing or tedious to edit).

d. Data Entry Rate - Data entry shall be paced by the user, depending on the user's application, criticality of the operation, and attention span, rather than by the system.

e. System Acknowledgment of Data Entry - The system shall provide a positive feedback to the user indicating the acceptance or rejection of a data entry and shall indicate to the user processing delays of more than 15 seconds.

f. Explicit Completion Action - Data entry shall require an explicit completion action, such as the depression of an ENTRY key after a string input.

g. Validation - Data entries shall be validated by the system for correct format, legal value, or range of values. Where data is entered in sets with the same format and range of values, the entire data set shall be validated upon its completion.

h. Input Units - Data shall be entered in units which are familiar to the user.

i. Software-Available Data - The user shall not be required to enter data already available to the software.

j. File Names - Names of files shall be distinctive and descriptive of the contents of the files to aid in locating files and deterring accidental selection or deletion of files which have similar names.

k. Originator Identification - For reference, the system shall automatically associate the originator of a data file , text file, or message with the file's name.

9.6.4.4 Design Requirements for Interactive Control

a. Simplicity - The relationship between data entry and displays shall be straightforward and explicit. Data entry actions shall be simple and direct.

b. Accidental Actuation - Provision shall be made to prevent accidental actuation of potentially destructive control actions, including the possibility of accidental erasure or memory dump.

c. Compatibility with User Skill, User Tasks - Controls for data entry shall accommodate the lowest anticipated user skill level.

d. Availability of Information - Information necessary to select or enter a specific control action shall be available to the user when selection of that control action is appropriate.

e. Minimized Keying - The amount of keying required shall be minimized by using numbered lists and abbreviations.

f. Physical Characteristics of Selectable Items - Selectable items or regions shall not be so large that they waste screen space or may not be perceived as selectable.

g. Multitasking/Multimonitor Considerations - In a multitasking environment with multiple monitors, controllers, or cursors, the location of the active cursor shall be apparent to the user. If there are two pointing cursors -- one on each of two monitors -- the active cursor shall be apparent to the user. If there is a single cursor that moves between two monitors, its path shall be continuously trackable.

h. X and Y Outputs - The controller, with the exception of arrow keys or other discrete step keys, shall be able to produce any combination of x and y output values.

i. X-Y-Z Control Outputs - Any controller shall be able to produce any combination of x, y, and z output values. Output in each of the three dimensions shall be discriminable from each other.

NOTES

NOTES

10.2.3 Personal Hygiene Design Requirements

10.2.3.1 Partial Body Cleansing Design Requirements

Partial body cleaning facility requirements are listed below:

a. Necessity for Facility - Partial body cleaning facilities shall be provided on all missions that exceed 1 day. On missions of 30 days or more, one facility shall be provided for every four crewmembers. A partial body washing facility shall be provided to accomplish washing of selected body areas.

b. Design Requirements - All partial washing equipment using water shall have the following design characteristics:

   1. Method to allow application of water to the hands and face.

   2. Method to remove excess water from the body and facility, and cleansing aids.

   3. Means to control water temperature.

   4. Means to control water flow/usage.

   5. Means to prevent water from escaping into the module environment.

   6. Compatibility with the use of soap, shampoo, and antiseptic solutions, and accommodation of hair and other similar substances which might commonly find their way into such an area.

      (Refer to Figure 10.3.2-1 for rate of body waste generation.)

   7. Means to prevent cross contamination among crewmembers.

   8. Means for final drying of body part.

   9. Appropriate body and equipment (e.g., towels) restraints for reduced gravity conditions.

   10. A means to personally code crew hygiene items.

   11. All personal hygiene facilities shall be designed to be easily cleaned sanitized, and maintained.

c. Cleansing Agents - Refer to Paragraph 10.2.3.2.d.

10.2.3.2 Whole Body Cleansing Design Requirements

Whole body cleansing facility requirements are listed below:

a. Necessity for Facility - A whole body cleansing facility shall be provided for all long duration missions.

b. Equipment Design - Refer to 10.2.3.1.b.

c. Privacy - Privacy shall be provided for whole body cleaning.

d. Cleansing Agents

   1. Soap, shampoo, and other cleansing agents shall be chosen for their compatibility with a wide range of skin types in a low humidity environment.

   2. Some range of personal selection of cleaning agents, perhaps including *alternative off-the-shelf commercial brand name preparations, shall be* permitted as long as all items are judged safe for use in the space module environment and are compatible with on-board water reclamation and/or water and solid waste disposal systems.

Waste products	Mass (gm/person/day)	Volume (ml/person/day)
Hair growth	0.03 (0.3 to 0.5 mm per day)	
Desquamated epithelium	3	2
Hair — depilation loss	0.03	0.03
Hair — facial — shaving loss	0.3	0.28
Nails	0.01	0.01
Solids in sweat	3	3
Sebaceous excretion — residue	4	4.2
Solids in saliva	0.01	0.01
Mucus	0.4	0.4
Mensus (see note 1)	113.4	113.4
Flatus as gas	—	2000
Solids in feces	20	19
Water in feces	100	100
Solid in urine	70	66
Water in urine (note 2)	1630	1630

Note:
1. Approximately once every 25 to 34 days and lasts 4 to 6 days, approximately 80% released during first 3 days.
2. Based on Skylab data.

Figure 10.3.2-1 Volume and Mass of Human Body Wastes

MSIS 215

e. Dressing Area - The cleaning facility will include a means for private body drying and dressing and a dry area for clothes. The area provided for body drying and dressing shall be temperature controlled.

f. Capacity - The whole body washing system shall have sufficient capacity to allow each crewmember to wash a minimum of three times a week.

10.2.3.3 Oral Hygiene Design Requirements

a. Necessity for Facility - Oral hygiene facilities shall be provided for all missions that exceed 1 day.

b. Functional Requirement - Facilities shall allow the crew to daily maintain proper tooth, oral cavity, and gum cleaning and care.

c. Cross Contamination - The facilities shall prevent cross contamination among crewmembers.

d. Expectoration - Provide facility as necessary to allow the user to expectorate washing fluids and spittle.

10.2.3.4 Hair Cutting Design Requirements

a. Necessity for Facility - A facility shall be provided as necessary to keep facial and head hair the length dictated by mission requirements and personal grooming preferences.

(Rate of hair growth is shown in Figure 10.3.2-1.)

b. Facility Design - The facility shall be sufficiently large to allow a crewmember to assist in hair cutting and trimming. The facility shall be equipped with appropriate storage areas, restraints, and mirrors.

c. Debris Containment - The facility shall ensure that hair is contained and does not escape into the space module environment.

(Refer to Paragraph 5.1.3.3, Atmosphere Contamination, for further information on debris containment requirements.)

d. Lighting - Lighting shall be sufficient to see small details.

(Refer to Paragraph 8.13, Lighting, for specific lighting requirements.)

10.2.3.5 Grooming and Shaving Design Requirements

a. Necessity for Facilities - A shaving and grooming facilities shall be provided for all missions that exceed 2 days.

(Refer to Figure 10.3.2-1 for the rate of generation of nails and hair.)

b. Debris Containment - The capability shall be provided for collection and containment of body hair and nails.

(Refer to Paragraph 5.1.3.3, Atmospheric Particulates, for further information on debris containment requirements.)

c. Supplies - Refer to Paragraph 10.2.3.2.d Cleansing Agents

d. Facility Design - Grooming facilities shall consist of a designated space equipped with appropriate stowage areas, restraints, mirrors, and access to a water supply.

e. Lighting - Lighting shall be sufficient to see small details.

(Refer to Paragraph 8.13, Lighting, for specific lighting requirements.)

10.3.3 Body Waste Management Facilities Design Requirements

10.3.3.1 Defecation and Urination Facilities Design Requirements

The following are requirements for the design of crew defecation and urination facilities:

a. Number of Facilities - Facilities shall be provided based on crew size.

b. Fecal Collection - Fecal collection facilities shall meet the following requirements:

1. The facilities shall provide crew interfaces to accommodate the collection of fecal solids, liquids, gases, particulates, and associated consumable material (e.g., wipes).

2. The facilities shall allow simultaneous urination and defecation while seated. In addition, accommodations shall be provided for vomitus collection within reach of the seated crewmember.

3. Capacity - The fecal collection system shall have the following capacity:

a) The fecal collection devices shall accommodate fecal matter of 400 gm (14 oz) by weight and 300 ml (18 in^3) by volume per person per day.

b) The capability to accommodate a maximum of 1000 ml (61 in^3) of diarrhea discharge shall be provided.

c) The fecal collector shall accommodate a maximum BOLUS length of 330 mm (13 in).

d) Quantities in excess of these amounts shall not result in an unresolvable condition.

4. The facilities shall capture, isolate, stabilize, and store all wastes and wipes generated during defecation.

c. Urine Collection - Urine collection facilities shall meet the following requirements.

1. The urine receiver should be located so that male crewmembers may also urinate in the standing position without removing lower clothing.

2. The facilities shall provide crew interfaces to accommodate liquid capture and splash control.

3. Capacity - The urine collection system shall have the following capacity:

a) The urine collection devices shall accommodate a maximum urine output volume of 4000 ml (244 in^3) per person per day.

b) The urine collection system shall be designed to accommodate urinary discharge up to 800 ml (49 in^3) in a single micturition at a delivery rate of 50 ml/sec (3 in^3/sec).

c) Urine volumes in excess of these amounts shall not result in an unrecoverable condition.

4. The facilities shall capture, isolate, stabilize, and store all wastes and wipes generated during urination.

d. Sanitation - The defecation and urination facilities shall meet the following sanitation requirements:

1. The facilities shall be designed to allow periodic cleansing and disinfection of crew interfaces and subsystems.

2. The facilities shall prevent cross contamination among the crew members.

3. The facilities shall not contaminate other areas of the space module.

e. Noise - A means shall be provided to control noise from the facility equipment and/or crewmembers when the equipment is in operation.

f. Odors - Odors from the facility and from storage and handling facilities shall be controlled.

g. Privacy - Defecation and urination facilities shall provide both visual and auditory privacy for the user.

h. Capacity - Sufficient urination and defecation facilities and capacity shall be provided to allow use by the crew within mission time and schedule constraints.

i. Contingency System - A contingency urination and defecation facility shall be provided in the event of primary system failure.

j. Restraints - Appropriate restraints shall be provided for facility use and post use cleanup.

k. Body Cleansing - Provisions shall be provided in the urination and defecation facilities for inspecting and cleaning the body after use and the disposal of used materials.

l. Anatomical Accommodation - Urination and defecation facilities shall be provided to accommodate the physiological differences of male and female crewmembers and the anatomical size range of the crew. The crew interface hardware shall be appropriately designed to allow easy interface with other personal hygiene equipment, personal hygiene supplies, and crewmember clothing.

m. Handling of Feces and Urine - If a crewmember is required to handle urine or feces samples for transfer to another area, the following requirements apply:

1. Crewmembers shall be protected from direct contact with waste material.

2. Waste material odors shall be controlled.

3. Methods shall be provided to prevent escape of waste material into the environment.

4. Transfer containers shall be so constructed as to prevent microbial escape during transfer.

n. Inspection - The capability shall be provided for a crewmember to visually inspect his or her fecal waste products.

o. Noise (Refer to Paragraph 5.4.3.2.3, Annoyance Exposure Requirements, for applicable noise criteria.)

10.3.3.2 Facilities for Other Waste Products Design Requirements

In addition to facilities for urination and defecation, the waste management facility shall have the following capabilities:

a. Vomitus - The waste management facility shall be able to collect, contain, transport, and treat vomit. The collection facility shall be readily accessible, particularly during the first few days of the mission.

b. Menses - A means of collection, treatment, and disposal of menstrual discharge and associated absorbant material shall be provided to female crewmembers. The facility shall be private.

c. Transfer Containers - Transfer containers, if required, shall be so constructed as to prevent microbial escape during transfer.

10.4.3 Individual Crew Quarters Design Requirements

The following are design requirements for one-person individual crew quarters:

a. Communications - Two way audio/visual/data communications system shall be provided between the crew quarters and other module areas, and the ground. The system shall have the capability of alerting the crew quarters occupant in an emergency.

b. Environmental Controls - Independent lighting, ventilation and temperature control shall be provided in crew quarters and shall be adjustable from a sleep restraint.

(Refer to Paragraph 5.8.3, Thermal Design Requirements, for thermal and ventilation requirements, and Paragraph 8.13.3, Lighting Design Requirements, for lighting requirements.)

c. Noise - The noise levels in the crew quarters shall be as low as possible during sleep periods.

(Refer to Paragraph 5.4.3.2.3.1, Wide-Band Long-Term Noise Exposure Requirements, for permissible noise levels.)

d. Movement - The vibration and acceleration of the crew quarters shall be minimized to the maximum extent possible.

(Refer to Paragraph 5.5.3.3.3, Reduced Comfort Boundary, for sleep area vibration limits.)

e. Stowage - Facilities shall be provided in the crew compartment for stowing bedding, clothing, and personal items.

f. Compartment Size - For long duration space missions, dedicated, private crew quarters shall be provided for each crewmember with sufficient integral volume to meet the following functional and performance requirements:

1. 1.50 m3 (53 ft^3) for sleeping.

2. 0.63 m3 (22 ft^3) for stowage of operational and personal equipment.

3. Additional free volume, as necessary, for using a desk, computer/communication system, trash stowage, personal grooming, dressing/undressing convalescence, off-duty activities, and access to stowage or equipment without interference to or from permanently mounted or temporarily stowed hardware. The internal dimensions of the crew quarters shall be sufficient to accommodate the largest body size crewmember under consideration.

(Refer to Figure 8.6.2.3-1 for maximum 1-g unrestrained clothing don/doft envelope.)

g. Exit and Entry - The opening shall be sufficiently large to allow contingency entry by an EVA suited crewmember.

(Refer to Paragraph 8.10.3, Hatch and Door Design Requirements, for requirements on doors.)

(Refer to Paragraph 14.5.3.5, EVA Passageway Design Requirements, for minimum opening for EVA suited crewmember.)

h. Privacy - The individual crew quarters shall provide audio and visual privacy for the occupant.

i. Restraints - Restraints shall be provided as necessary for activities such as sleeping, dressing, recreation, and cleaning.

(Refer to Paragraph 11.7.2.3, Personnel Restraints Design Requirements, for requirements on restraints.)

j. Windows - Window accommodations shall be provided in individual crew quarters on long duration missions.

10.5.3 Galley and Wardroom Design Requirements

10.5.3.1 Overall Galley and Wardroom Layout Design Requirement

The following requirements apply to the overall layout of a space module galley and wardroom:

a. Traffic Flow - The galley and wardroom shall be configured to provide clear traffic paths for the crew to efficiently perform galley activities.

b. Size of Crewmembers - Galley and wardroom hardware shall be usable by international crews and by the full size range of crewmembers.

(See Paragraph 3.3.1, Body Size, for specific dimensions.)

c. Restraints - Restraints shall be provided for crewmembers, food, utensils, cooking equipment, and other loose items as necessary at galley and wardroom locations.

d. Ambient Conditions - Comfortable eating/dining conditions over prolonged periods requires the capability to adjust light levels, light directionality and lighting type. Ambient noise levels should also be kept below 70 db (a).

(Refer to Paragraph 11.7, Personnel Restraints Design Requirements, for specific restraint design requirements.)

10.5.3.2 Food Selection, Preparation, Consumption Design Requirements

a. Inventory Update and Review - The galley shall provide a system which allows for simple and rapid update and review of the food, beverage and water inventory.

(Refer to Paragraph 13.3.3, Inventory Control Design Requirements, for additional requirements.)

b. Identification - All food items shall be identifiable in terms of contents and method of preparation.

c. Accessibility - A pantry or immediately accessible stowage area for at least one day's food supply for the entire crew shall be provided in the galley.

d. Heating - A means shall be provided in the galley for heating food and liquids to at least 66° C (150° F) in less than 30 minutes and for maintaining that temperature.

e. Chilling - A means shall be provided in the galley for cooling food and liquids to 4°+/-2° C (39°+/-3°F).

f. Rehydration - A means shall be provided in the galley for injecting necessary potable water for rehydration of food.

(Refer to Paragraph 7.2.2.3.2, Potable Water - Design Requirements, for potable water requirements.)

g. Serving and Preparation Utensils - Area shall be provided in the galley for stowage of eating utensils, servicing equipment (trays, plates, containers, etc.), and preparation tools and containers.

h. A table shall be provided for eating.

10.5.3.3 Food Packaging and Stowage Design Requirements

a. Package Portions

b. Rehydration Provisions

c. Kneading Provisions

d. Integration With Food Preparation System

e. Eating

f. Toxicity

10.5.3.4 Galley and Wardroom **Cleaning Design Requirements**

The following facilities shall be provided for galley and wardroom cleaning and sanitation:

a. Design for Cleaning - The surfaces in the galley and wardroom shall be easily accessible for cleaning and sanitation. The surface texture shall be capable of being wiped clean. Closeouts shall be provided to preclude contamination in areas that are inaccessible.

b. Cleaning Supplies and Equipment - Cleaning supplies and equipment shall be readily available to the galley and wardroom. The equipment and supplies shall be capable of the following:

   1. Sanitizing the galley and wardroom.

   2. Collection, containment, and stabilization (as necessary) of debris, spills, and odors.

   3. Washing and sanitizing of reusable utensils, serving equipment, and preparation equipment.

c. Trash Collection - A trash collection point shall be provided in the galley and wardroom for both wet and dry trash. Trash shall be kept out of sight and odors shall be controlled so that the trash collection points are not aesthetically objectionable to the crew.

   (Refer to Paragraph 13.2.3, Housekeeping Design Requirements, for specific requirements.)

10.6.3 Meeting Facility Design Requirements

10.7.3 Recreation Facility Design Requirements

10.8.3 Microgravity Countermeasure Facility Design Requirement

10.8.3.1 Microgravity Countermeasures Equipment/Supplies Design Requirements

10.8.3.1.1 Exercise Equipment

a. Strength Equipment - An isotonic strength mechanism (probably an ergometer), capable of imposing resistive forces of from 45 to 1335 N (10 to 300 lb), so that crewmembers can perform weight-lifting type exercises, shall be included.

b. Aerobic Equipment - A minimum of one piece of aerobic exercise equipment shall be provided.

10.8.3.2 Countermeasure Monitoring Design Requirements

a. Link With Medical Facility - Exercise devices shall have a real-time data link with the onboard medical facility.

b. Routine monitoring - The capability shall be provided to monitor the heart rate, duration of exercise period, and the power output from instrumented exercise device on a routine basis.

c. Periodic monitoring - The capability shall be provided to monitor electrocardiograph output, blood presssure, oxygen uptake (VO2), and muscle strength on a periodic basis.

10.8.3.3 Display Capabilities for Exercising Crewmembers Design Requirements

a. Exercise Parameters - Display of exercise parameters (heart rate, elapsed time, power input).

b. Trend Data - Trend analysis comparisons of crewmember performance over time.

c. Text and Video Entertainment (crewmember choice).

10.8.3.4 **Exercise Environment Design Requirements**

a. Cooling and Ventilation

b. Noise and Vibration Control

c. Minimize Boredom

10.8.3.5 Countermeasure Program Administration Design Requirements

Facilities shall be provided for administration of protocol, monitoring and recording, and schedule and protocol revision.

10.9.3 Space Medical Facility (SMF) Design Requirements

10.9.3.1 Medical Facility Environmental Design Requirements

The SMF shall meet the following environmental requirements:

a. Cleanliness - shall be capable of being cleaned and sanitized.

b. Lighting - shall meet requirements of Figure 8.13.3.1-1 for specific medical tasks.

c. Privacy - shall be visually separable from the remainder of the space module.

d. Noise - noise levels shall meet the requirements defined in section 5.4.3.

10.9.3.2 Equipment Requirements

10.9.3.2.1 Data Base and Communications Capability

A system shall be provided which can manage and store medical information and crew health records, inventory of medical supplies and pharmaceuticals, and two way voice and visual communications between the module and supplemental medical support facilities outside the module.

10.9.3.2.2 Environmental Monitoring Equipment

The SMF shall have the ability for real-time or near real-time monitoring for: particulate substances; microbial contamination of air, water, and surfaces; volatile contaminants of the atmosphere; potential water supply contaminants (Fig. 7.2.2.3.2.1-1); and module and biological radiation exposure.

10.9.3.2.3 Physiological Monitoring Equipment

The SMF shall have cardiovascular, pulmonary, metabolic, renal, muscular and skeletal, and body fluids physiological monitoring capabilities.

10.9.3.2.4 Medical Life Support

The SMF shall be capable of emergency life support until further medical treatment can be administered. Ventilator/respirator support and pulmonary assessment equipment shall be included with the medical life support equipment.

10.9.3.2.5 Laboratory

The SMF laboratory shall be capable of monitor and analysis of hematology, clinical chemistry, urine analysis and microbiology.

10.9.3.2.6 Diagnostic Imaging

The SMF shall provide both a radiographic and nonradiographic imaging capability.

10.9.3.2.7 Countermeasures

The SMF shall provide the equipment necessary to counteract the effects of reduced gravity on the body. The countermeasures shall include exercise equipment, physiologic monitoring equipment, pharmaceuticals, and pressure devices to counteract the effect of fluid shifts in zero gravity.

(Further details on the microgravity countermeasure facilities are in Paragraph 10.8)

10.9.3.2.8 Surgery/Anesthesia Equipment

The SMF shall provide supplies and equipment to perform minor surgery.

10.9.3.2.9 Dental Care Equipment

The SMF shall contain equipment and supplies used to treat dental anomalies of a complexity up to and including tooth removal.

10.9.3.2.10 Intravenous Fluid Injection Supplies and Equipment

The SMF shall provide equipment for preparation and measured injection of sterile water, fludis containing medications, electrolytes, or nutritional substances, and blood or blood products.

10.9.3.2.11 Hyperbaric Treatment Facilities

The SMF shall have an air lock designed for compression therapy at up to 6 Atmospheres for treatment of decompression sickness and air embolism.

10.9.3.2.12 Pharmaceuticals

The SMF shall have sufficient pharmaceuticals and facilities for their stowage.

10.9.3.2.13 Central Supply

Miscellaneous medical equipment such as bandages, burn treatments, sterile water, etc. shall be provided at a readily accessible central point.

10.9.3.2.14 Physician's Instruments

The SMF shall contain a transportable package of physician's instruments sufficient for the conduct of a routine diagnostic exam.

10.9.3.2.15 Safe Haven Medical Design Requirements

10.9.3.2.15.1 Nominal Operation Design Requirements

The safe haven shall have the following minimum operational capabilities for medical support while awaiting rescue:

a. Pharmacy.

b. Central supply.

c. Diagnostic exam.

d. Emergency airway equipment.

e. Mechanically powered intravenous production.

f. Administration capability.

g. Single deployable nonpowered exercise device (to be used only if primary exercise devices are not operational.).

10.9.3.2.15.2 Contingency Operation Design Requirements

10.9.3.2.16 Facilities For Processing and Storage of a Deceased Crew Member

10.10.3 Laundry Facility Design Requirements

10.11.3 Trash Management Facility Design Requirements

The following are the design requirements for trash management from the source to the disposal area:

a. Trash Sorting - Where it is necessary to sort trash before depositing in a receptacle, the following requirements shall be met:

   1. Receptacle labeling - Each of the receptacles shall be appropriately labeled defining acceptable and non-acceptable trash.

   2. Transfer package labeling - If trash must be transferred from one receptacle to another, there shall be a method of identifying the trash so that it is placed in the proper receptacle.

   3. Human error - The system shall be capable of recovery in the event that trash is inappropriately placed in a receptacle.

b. Trash Receptacles:

   1. Identification of receptacles - All trash receptacles shall be clearly identifiable.

   2. Receptacle location - The location of trash receptacles shall meet the following requirements:

   a. The location shall effectively reduce trash in the crew stations.

   b. The location shall minimize crew trash handling time.

   c. The location shall not interfere with crew movement.

c. Odor and Contamination Control - The following requirements apply to control of odor and contamination:

1. Trash handling equipment shall be designed to preclude module contamination during introduction of trash.

2. Trash storage areas shall preclude contamination of the living environment by harmful microorganisms or odor.

3. The trash management equipment area shall be capable of being cleaned and sanitized.

4. There shall be a safe means for disposal of any harmful chemical or radioactive wastes.

d. Operation - All trash collection, handling, and disposal equipment shall be capable of being operated by the full size and strength range of the defined crewmember population.

(Refer to Paragraph 3.3.1, Body Size, and Paragraph 4.9.3, Strength Design Requirements, for additional requirements.)

e. Receptacle Capacity - Crewmembers shall be capable of easily determining the level of trash (in relationship to capacity) in each of the trash receptacles.

10.12.3 Stowage Facility Design Requirements

The following are design requirements for space module stowage facilities:

a. Location - The following are requirements for the location of stowage areas:

1. Proximity - Items shall be stored as close as possible to their point of use.

2. Safety - Hazardous items shall be stored away from heat or ignition sources and away from crew congregation areas.

3. Interference - Stowage facilities shall not interfere with normal or emergency crew operations.

b. Accessibility :

1. Stored items shall be accessible by the defined size range of the space module crew.

(Refer to Paragraph 3.3.1, Body Size, for additional information.)

2. Removal of a stored item shall not require removal of another, unrelated item.

c. Labeling and Coding - Stowage locations and items shall be coded to allow for location, replacement, or inventory of items. The coding system shall allow modification.

(Refer to Paragraph 9.5.3, Labeling and Coding Design Requirements, for additional requirements.)

d. Environment:

(Refer to Section 5.0, Natural and Induced Environments, and Paragraph 8.13.3, Lighting Design Requirements, for habitability and lighting requirements of stowage areas that require human occupation.)

e. Hand Operation - Stowage retainers shall be designed to be operated by hand; no tools shall be required.

f. Commonality - Latching devices, containers, and container covers shall have design commonality throughout all space module stowage facilities.

g. Inventory Management - The stowage facility shall be compatible with the space module inventory management system.

(Refer to Paragraph 13.3.3, Inventory Control Design Requirements, for additional information.)

h. Retention Devices - Stowage items shall be secured within the container such that the item remains in the container/enclosure when the container is opened. Removal of retention devices shall not release other items which are not required.

NOTES

NOTES

11.2.3 Tool Design Requirements

11.2.3.1 Hand and Tool Integration Design Requirements

11.2.3.1.1 Tool Handgrip Size and Shape Design Requirements

Power and manual hand tools shall comply with the following handgrip size and shape requirements:

(Refer to Paragraph 6.5.3, Touch Temperature Design Requirements for specific touch temperature criteria.)

a. Gripping Surface - Hand gripping surfaces that minimize abrasion to the EVA glove material shall be provided on handles of tools.

b. Sleeve Type Adapters - If sleeve-type handle cover adaptors are used, they shall be adequately secured so they will not slip, rotate, or come off.

c. Orientation - Tool handles shall be oriented to allow the operator's wrist to remain in the most natural position while force or guidance inputs are applies.

d. Auxiliary Controls - If an auxiliary control on the tool must be manipulated while the operator is holding the tool, the control shall be located where:

   1. The thumb or finger of the holding hand can manipulate the control without disturbing the tool/ fastener holding position.

   2. Unintentional or inadvertent control operation is impossible.

11.2.3.1.2 Tool Handedness Design Requirements

The following requirements apply to handheld manual tools and handheld power tools:

a. Tool Operation - All general purpose hand tools shall be one-handed operable in-so-far as practical.

b. Tool Installation/Alignment - One hand only shall be required for tool installation and alignment.

c. Tool Handle Design - Tool handles shall be designed to allow the operator to use either the left or right hand.

11.2.3.1.3 Tool Actuation Forces and Direction of Action Design Requirements

All hand tools shall comply with the following:

a. Actuation Force - Hand tools shall require an actuation force of less than 89N (20 lbs) or a torque of less than 15 Nm (11 ft-lbs).

b. Throw Angles - Ratcheting tools shall be capable of providing torque with a minimum throw angle of 45 degrees.

c. Plier-Type Tools - Plier-type tools shall be spring-actuated in the open direction to permit one-handed operation.

d. Driver-Type Tools - Driver-type hand tools shall not require a push force to maintain tool engagement while providing torque.

11.2.3.2 Tool Commonality Design Requirements

To ensure that the tool complement is kept at a minimum, the following *requirements shall apply:*

a. Tool Quantity - The number of different types of tools shall be minimized.

b. Standard Attaching Hardware and Fasteners - Size and type of attaching hardware and fastener head configurations shall be standardized throughout the vehicles to limit the number and kind of tools required to perform maintenance tasks.

(Refer to Paragraph 11.9, Fastener Design Requirements, for specific fastener-to-tool interface requirements.)

c. Special Tools - The number of different and special tools required for maintenance shall be minimized.

d. For every type and size of fastener used onboard, a corresponding tool(s) shall be available for removal/replacement.

(Refer to Paragraph 11.9.3.1 l., Fastener Design Requirements for specific considerations and requirements).

11.2.3.3 Tool Tethering/Retention Design Requirements

a. Tool Restraints - A means shall be provided on all tools for restraining the tool during use.

b. Tool Transporter Devices - Tool carriers shall be provided to transport tools and to retain these tools during the maintenance activity.

c. Retention of Small Parts - Tool carriers/transfer devices shall provide a means of retaining small parts and attaching hardware. Items retainable in this manner shall be visible for retrieval.

d. Tool Restraint During Translation - Tools shall be restrained in the tool carrier/transfer device with sufficient force to prohibit detachment during translation.

e. Tool Carrier Attachment - Tool carriers and tool retention devices shall have provisions to attach the device to the crewmember or to adjacent structure or equipment.

(See Paragraph 11.7.3.3, Equipment Restraint Design Requirements, for other applicable restraint requirements.)

f. Inadvertent Tool Disassembly - A means shall be provided to prevent inadvertent tool disassembly while installing, using, removing, or transporting the tool.

11.2.3.4 Tool Stowage Design Requirements

a. General - A systematic approach shall be used in stowing tools and maintenance aids throughout the space module.

b. Stowage Provisions - Provisions for launch, entry, and temporary inflight stowage shall be provided.

c. Stowage Location:

1. Specialized tools shall be stowed in areas which correspond to their functional applications.

2. All general-purpose tools shall be grouped in one specific area.

d. Tool Stowage List - A tool summary or listing of the entire tool inventory, including stowage locations, shall be available onboard the space module.

e. Tool Arrangement in Stowage Container - A systematic approach shall be used in the arrangement of tools in the tool kit.

f. Temporary Stowage at Work Area - A systematic approach and a methodical layout of tools at the work area shall be required.

(Refer to Paragraph 10.12.3, Stowage Design Requirements, for other specific stowage requirements.)

11.2.3.5 Tool Labeling and Identification Design Requirements

(Refer to Paragraph 9.5.3, Labeling and Coding Design Requirements for detailed labeling and coding requirements.)

a. Selection of Names for General Tools - Tool names shall be identical to those names called out on the tool/ tool label and, in all cases, will be the most common definitive name recognizable by the crewmembers.

b. Selection of Names for Specialized Tools - Specialized tool nomenclature shall describe the specific task it is intended to accomplish and shall not be identified with the equipment it is servicing.

c. Identification of Specialized Tools - When special tools are absolutely necessary, they shall be coded and/or marked to indicate intended use.

d. Tool Labels - Prominent labels shall be provided adjacent to each tool in the stowage container/kit if the tool is not readily recognizable.

e. Tool Metric/English Identification - All tools shall be labeled or coded to indicate whether the tool is sized in metric or English units.

f. Tool Inventory Control Labeling - Tools shall be tracked by an automated inventory control identification system.

(Refer to Paragraph 13.3.3, Inventory Control Design Requirements, for specific requirements.)

g. EVA Tool Compatibility - IVA tools that are EVA compatible shall be so identified.

11.2.3.6 Tool Access Design Requirements

The following tool access volume and operational constraints requirements are applicable to both IVA and EVA hardware design. Refer to Figure 11.2.3.6-1 for IVA requirements.

a. Tool Head Clearance - When only tool access is required, a 2.5 cm (1 in.) clearance shall be provided around the fastener or drive stud for insertion, actuation, and removal of the drive end of the tool.

b. Tool Handle Clearance - A minimum of 7.6 cm (3 in.) shall be provided for clearance between a tool handle engaged on a fastener or drive stud and the nearest piece of hardware. The tool handle should be able to maintain this clearance through a full 180 deg. swept envelope.

c. Tool Head-to-Fastener Engagement Height - The tool socket/fastener head engagement height shall be a minimum of 0.7 cm (0.3 in.).

d. Tool Handle Offset - The maximum tool offset between the tool handle and the tool head shall be 35.5 cm (14 in.).

e. Access for Tools - Minimum tool access clearance for hand tool actuation is given in Figure 11.2.3.6-2.

11.2.3.7 Special Tool Features Design Requirements

a. Nonsparking Tools - Nonsparking materials shall be required for general purpose tools.

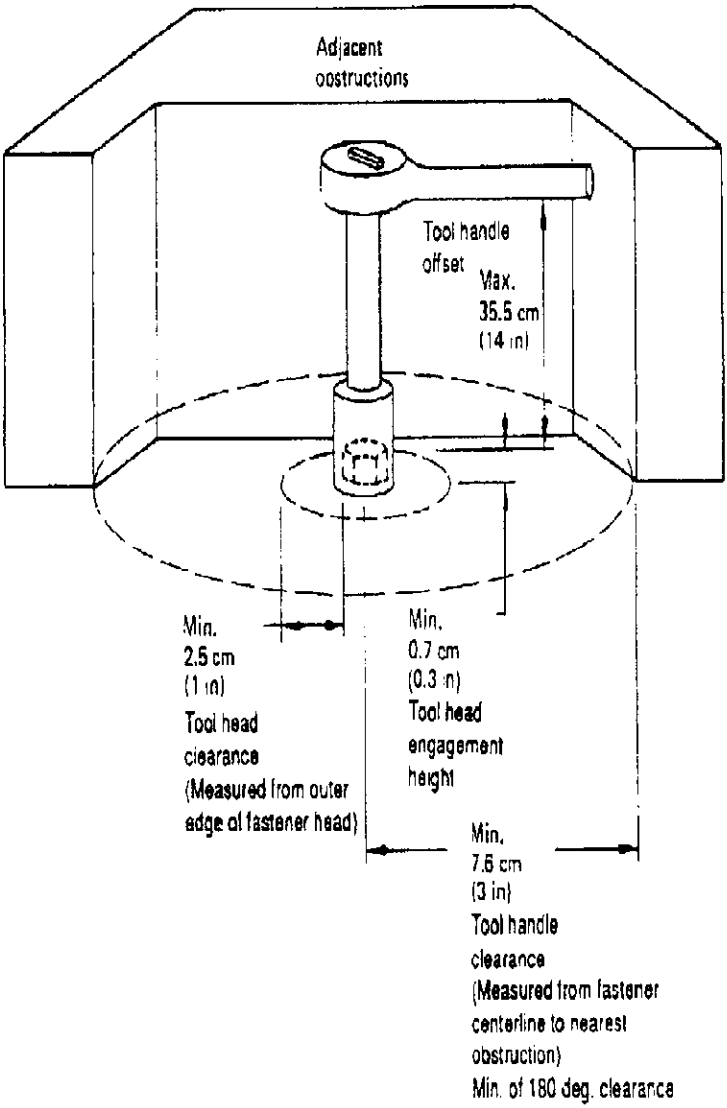

Figure 11.2.3.6-1 Tool Access Requirements (IVA)

MSIS 12

Opening Dimensions		Task
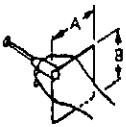	A 117 mm (4.6 in) B 107 mm (4.2 in)	Using common screwdriver with freedom to turn hand through 180°
	A 133 mm (5.2 in) B 115 mm (4.5 in)	Using pliers and similar tools
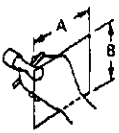	A 155 mm (6.1 in) B 135 mm (5.3 in)	Using T-handle wrench with freedom to turn wrench through 180°
	A 203 mm (8.0 in) B 135 mm (5.3 in)	Using open-end wrench with freedom to turn wrench through 62°
	A 122 mm (4.8 in) B 155 mm (6.1 in)	Using Allen-type wrench with freedom to turn wrench through 62°

Figure 11.2.3.6-2 Minimal Clearance for Tool-Operated Fasteners

MSIS 27

b. Nonconductive Tools :

(Refer to Paragraph 6.5.3, Touch Temperature Design Requirements, when tools are to be used in extremely hot or cold temperature areas.)

(Refer to Paragraph 6.4.3, Electrical Hazards Design Requirements, for requirements for insulation protection against electrical hazards.)

c. Finish - Tools shall be capable of being refinished in flight in order to remove burrs.

(Refer to Paragraph 6.3.3, Mechanical Hazards Design Requirements, for burrs, corners, edges, and protrusion design requirements.)

d. Battery Pack :

1. Power tools shall be designed so the battery packs can be replaced at the worksite.

2. Power tools using battery packs shall have a level-of-charge indicator or an indication as to when a battery pack is required to be replaced or recharged.

3. Hazards associated with charging and stowage of rechargeable batteries (such as toxic or flammable offgassing, leakage of corrosive electrolytes or high temperatures) shall be addressed and controlled.

11.3.3 Drawer and Rack Design Requirements

11.3.3.1 Drawer and Rack Interfacing Requirements

Stowage drawers, equipment drawers and racks shall be designed to provide the following interfacing features:

a. Size :

1. Unless prohibited by functional needs, all racks shall be designed to house single-wide drawers (and other types of equipment mounting hardware) that shall be 48.26 cm (19.00 in) wide or double-wide drawers that shall be 96.52 cm (38.00 in) wide.

(Refer to Paragraph 2.3.2, Standardization Design Requirements, for the general standardization requirements.)

2. If equipment is intended to be launched and returned in the Shuttle stowage lockers, it shall be sized per Figure 11.3.3-1.

b. Location Related to Traffic Patterns - Racks that require frequent drawer deployment shall be located in areas that do not have high traffic.

(Refer to Paragraph 8.7.3, Traffic Flow Design Requirements, for general and specific requirements related to blocking traffic patterns.)

c. Unobstructed Volume for Use - Provide adequate clearance such that the drawers can be opened, removed, and replaced without obstructions from adjacent hardware.

d. Easily Removable - Rack and drawer interfaces shall be designed such that the drawers can be removed from their rack or cabinet along a continuous straight or slightly curved path without using tools.

e. Limit Stops :

1. Provide limit stops that will prevent the drawer from being unintentionally pulled out of the rack.

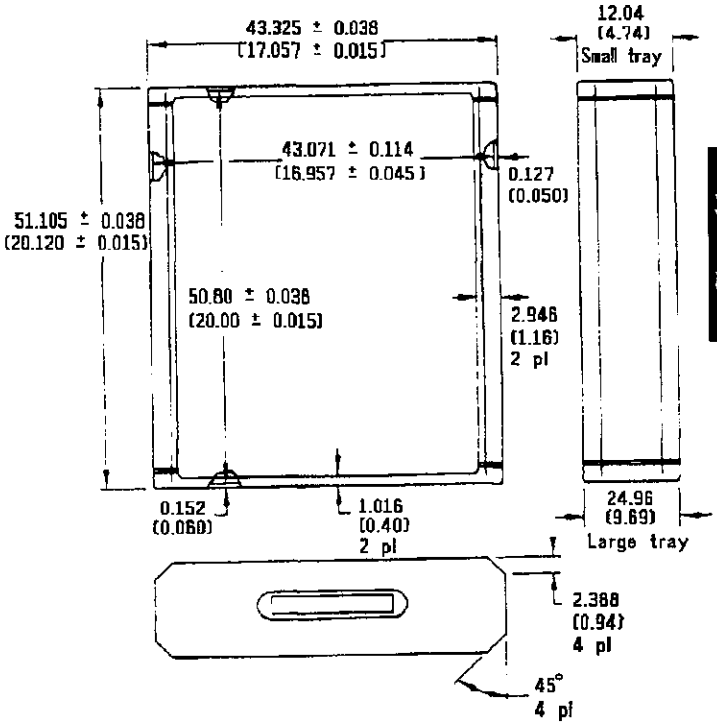

Tolerances: 0.0002 (0.0001) Small tray
0.0005 (0.0002) Large tray
Dimensions are in cm (in)

Figure 11.3.3-1 Shuttle Stowage Locker Dimensions

MSIS 229

2. The limit stops shall be designed to hold the drawer in the full open position.

3. The limit stops shall be capable of being disengaged without using a tool to enable drawer removal.

f. Drawer Movement Forces - Drawer opening/closing or removal/installation shall not require a force greater than 156 N (35 lbs).

(Refer to Paragraph 4.9.3, Strength - Design Requirements, for crewmember strength requirements.)

g. Alignment Guides - Provide guide pins or equivalent to aid in alignment when replacing a drawer into its rack or cabinet.

(Refer to Paragraph 11.5.3.2, Alignment Devices Design Requirements, for detailed requirements.)

11.3.3.2 Design Requirements Common to Both Stowage and Equipment Drawers

In addition to the requirements given in Paragraph 11.3.3.1, all stowage and equipment drawers shall be designed to provide the following features:

a. Latches/Handles/Operating Mechanisms - All latches, handles, and operating mechanisms shall be designed to be easily latched/unlatched and opened/closed with one hand by the entire crewmember population without having to use any operating instructions.

(Refer to Paragraph 4.9.3, Strength Design Requirements, for crewmember strength capabilities.)

(Refer to Paragraph 11.6.3, Handle and Grasp Area Design Requirements, for handle and grasp area configuration requirements.)

b. Latch/Unlatch Status - The design shall be such that it is obvious when the drawer is not fastened/locked when in the closed position.

11.3.3.3 Stowage Drawer Design Requirements

In addition to the requirements given in Paragraphs 11.3.3.1 and 11.3.3.2, stowage drawers shall be designed to meet the following requirements:

a. Restraint of Contents :

1. Drawer contents shall be restrained in such a way that the items shall not float free when the drawer is opened, or jam the drawer so it cannot be opened or closed.

2. Drawer contents shall be restrained in such a way that the contents can be removed/replaced without using a tool.

(Refer to Paragraph 11.7.3, Equipment Restraints, for specific restraint requirements.)

b. Arrangement in Housing/Cabinet - Drawers shall be arranged within their housing/cabinet such that the most frequently accessed drawers are in the most accessible locations.

c. Access to Contents - The contents of drawers shall be arranged such that the contents are visible and accessible when the drawer is in the open position.

d. Identification of Contents - In the stowed position, the contents of drawers shall be identified by labeling.

(Refer to Paragraph 9.5.3, Labeling and Coding Design Requirements, for specific requirements.

11.3.3.4 Equipment Drawer Design Requirements

In addition to the requirements given in Paragraphs 11.3.3.1 and 11.3.3.2, equipment drawers shall be designed to meet the following requirements:

a. Utility Connections :

1. The utility connections shall be designed to be easily disconnected/connected when the drawer is in the fully opened position.

   (Refer to Paragraph 11.10.3, Connector Design Requirements, for general and specific connector design requirements.)

2. If the utility connection is via a flexible umbilical, sufficient cable length shall be provided such that the drawer can be fully opened without disconnecting the cables.

   (Refer to Paragraph 11.14.3, Cable Management Design Requirements, for general and specific design requirements.)

b. Equipment Layout on Rack :

1. Components shall be mounted in an orderly array on a two-dimensional surface, rather than stacked one on another (i.e., a lower layer shall not support an upper layer).

2. Items of the same or similar form, but having different functional properties, shall be mounted with a standard orientation throughout the unit, but shall be readily identifiable and distinguishable, and shall not be physically interchangeable.

3. Delicate items shall be located or guarded so that they will not be susceptible to damage while the unit is being handled or maintained.

11.4.3 Closures and Covers Design Requirements

Equipment housings (e.g., electrical bays, cabinets, lockers, and consoles) shall be designed to provide closures and covers for inaccessible areas. The following requirements shall apply:

a. Sealing - The inaccessible areas shall be sealed to prevent small items from drifting into them.

b. Removal - Closures shall be quickly and easily removed to allow maintenance of equipment.

c. Securing - It shall be obvious when a closure is not secured, even though it may be in place.

d. Loads - Nonstructural closures should be capable of maintaining closure and of sustaining a crew-imposed minimum design load of 451 N (125 lbf) and a minimum ultimate load of 632 N (175 lbf).

e. Instructions - If the method of opening a cover is not obvious from the construction of the cover itself, instructions (including applicable tool instructions) shall be permanently displayed on the outside of the cover.

f. Clearance - Bulkheads, brackets, and other units shall not interfere with removal or opening of covers.

g. Application - An access cover shall be provided whenever frequent maintenance operations would otherwise require removing the entire case or cover, or dismantling an item of equipment.

h. Self-Supporting Covers - All access covers that are not completely removable shall be self-supporting in the open position.

   (Refer to Paragraph 12, Design for Maintainability, for other maintainability design considerations and requirements.)

i. Ventilation Screen Access - Where ventilation screens, holes, or grids are used, the ventilation surface shall be accessible for vacuuming in its installed position.

(Refer to Paragraph 13.2.3.3 Vacuum Cleaning Design Requirements, for more detailed requirements.)

11.5.3 Mounting Hardware Design Requirements

11.5.3.1 General Mounting Design Requirements

The following general requirements apply to mounting hardware:

a. Equipment Mounting - Equipment items shall be designed so that they cannot be mounted improperly.

b. Drawers and Hinged Panels - Subsystem components which are frequently pulled out of their installed position for checkout shall be mounted on equipment drawers or on hinged panels.

(Refer to Paragraph 11.3.3, Drawer and Rack Design Requirements, for specific requirements.)

c. Layout - Components shall be mounted so that a minimum amount of place-to-place hand movements will be required during operations.

d. Covers or Panels - Removal of any replaceable item shall require opening or removing a minimum number of covers or panels.

(Refer to Paragraph 11.4.3, Closures and Covers Design Requirements, for specific requirements.)

e. Installation/Removal Force - Hardware mounted into a capture-type receptacle that requires a push-pull action shall require a force less than 156N (35 lbs.) to install or remove.

(Refer to Paragraph 4.9.3, Strength Design Requirements.)

f. Rear Access - Equipment to which rear access is required shall be free to open or rotate to their full distance travel and remain in the "open" position without being supported by hand.

g. Tools - Whenever possible, items shall be replaceable with a common hand tool.

(Refer to Paragraph 11.2.3, Tool Design Requirements, for specific tool requirements.)

h. Direction of Removal - Replaceable items shall be removable along a straight or slightly curved line, rather than through an angle.

i. Visibility - All forward edges of the equipment item shall be visible to the restrained crewmember during alignment and attachment.

(Refer to Paragraph 11.5.3.2, Alignment Devices Design Requirements, for specific alignment requirements.)

j. Spacing - Mounting bolts and fasteners shall be spaced far enough from other surfaces to allow personnel to manipulate them.

(Refer to Paragraph 11.2.3.6, Tool Access Design Requirements, and Paragraph 11.9.3, Fastener Design Requirements, for specific requirements.)

k. Number of Mounting Bolts - Use the minimum number of fasteners, consistent with stress and vibration requirements, so that the crewmember's workload is minimized.

(Refer to Paragraph 11.9.3.1, General Fastener Design Requirements, for other fastener requirements.)

l. Shims, Washers - Where shims or washers are permitted in an IVA application, the following rules shall be followed:

1. Shims shall be bound together in a shim assembly.

2. Shim assemblies shall be tethered or restrained at the location or point of use and identified as to location or point of use.

3. A similar requirement shall be observed for washers and other loose items which are auxiliary connector/fastener devices.

11.5.3.2 Alignment Devices Design Requirements

The following alignment methods for replaceable hardware shall be used:

a. Alignment Marks - If proper interface orientation is not obvious by virtue of external geometry or if adequate visibility cannot be provided for hardware that will be mounted on-orbit, the hardware design shall incorporate alignment marks and/or orientation arrows.

1. Alignment marks shall be applied to both mating parts and the marks shall align when the parts are in the operational position.

2. An alignment mark shall consist of a straight line of a width and length appropriate to the size of the item.

Alignment marks shall be clearly visible to a crewmember performing hardware removal/replacement.

(Also see Paragraph 9.5.3.1.5, Alignment Marks/ Interface Identification Design Requirements.)

b. Alignment Devices - Guide pins or their equivalent shall be provided to assist in alignment of hardware during mounting, particularly on modules that have integrated connectors.

(Refer to Paragraphs 11.10.3.3, Structural Connectors Design Requirements, and 11.10.3.4, Optical Connectors Design Requirements, for connector alignment requirements.)

c. Keying - All replaceable hardware shall be designed so that it will be physically impossible to install it in the wrong orientation.

d. Replaceable Hardware Identification - Replaceable hardware shall be identified with nomenclature that aids the crewmember in identifying the hardware name, alignment of the hardware, and the correct use of attaching parts.

(Refer to Paragraph 9.5.3, Labeling and Coding Design Requirements, for specific requirements.)

11.6.3 Handle and Grasp Area Design Requirements

11.6.3.1 General Handle and Grasp Area Design Requirements

a. Provide Handles - All removable or portable units shall be provided with handles or other suitable means for grasping, tethering, handling, and carrying.

b. Exempt Items - Items less than 0.03 m3 (1 ft^3) whose form factor (shape) permits them to be handled easily shall be exempt from the above requirement.

c. Labeling of Nonhandling Areas - Built-in features that appear to be suitable for grasping/tethering/ restraining and are not suitable must be labeled to indicate that these features are not suitable for these purposes.

(Refer to Paragraph 9.5.3, Labeling and Coding Design Requirements, for specific requirements.)

11.6.3.2 Handle and Grasp Area Location Design Requirements

The following general location requirements of handles or grasp areas shall apply:

a. Interference - Handles and grasp areas shall be located so that they do not interfere with equipment location or maintenance.

b. Clearance - Clearances shall be provided between handles and obstructions consistent with anthropometric requirements.

c. Tether Attachments - Handles and grasp areas shall be suitable as tether or bracket attachment positions.

d. Location - The location of handles or grasp areas shall be such that they do not constitute passageway hindrances or safety hazards. If they must be located in passageways they shall be recessed and designed to minimize chance of crewmember injury or inadvertent contact.

e. Location/Front Access - Handles and grasp areas shall be placed on the accessible surface of an item consistent with the removal direction.

11.6.3.3 Nonfixed Handles Design Requirements

Hinged, foldout, or attachable (i.e., nonfixed) handles shall comply with the following:

a. Locked or Use Position - Nonfixed handles shall have a stop position for holding the handle perpendicular to the surface on which it is mounted.

b. One-Handed Operation - Nonfixed handles shall be capable of being placed in the use position by one hand and shall be capable of being removed or stowed with one hand.

c. Tactile or Visual Indicators - Attachable/removable handles shall incorporate tactile and/or visual indication of locked/unlocked status.

11.6.3.4 Handle Dimensions Design Requirements

IVA handles for movable or portable units shall be designed in accordance with the minimum applicable dimensions in Figure 11.6.3.4-1.

11.7.2.3 Personnel Restraints Design Requirements

11.7.2.3.1 General Personnel Restraints Design Requirements

All EVA and IVA personnel restraints (i.e., seat belts, shoulder harnesses, body restraints, foot restraints, and sleep restraints) shall comply with the following requirements:

(Refer to Paragraph 14.4.3.4, EVA Crew Restraint Design Requirements, for EVA-unique requirements.)

a. Comfort - Restraint forces shall be reasonably distributed over the body to prevent discomfort and shall not require conscious effort to remain constrained.

b. Allowable Comfort Time - Comfort of the IVA restraint system shall allow for a four-hour uninterrupted use.

c. Muscular Tension - Restraint design shall minimize or eliminate muscular tension.

d. Anthropometric Range - All personnel restraints shall accommodate the specific population of users for whom the system is to be designed.

Illustration	Type of handle	Dimensions in mm (in inches) (Bare hand) X	Y	Z
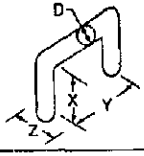	Two-finger bar One-hand bar Two-hand bar	32 (1–1/4) 48 (1–7/8) 48 (1–7/8)	65 (2–1/2) 111 (4–3/8) 215 (8–1/2)	75 (3) 75 (3) 75 (3)
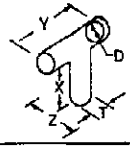	T-bar	38 (1–1/2)	100 (4)	75 (3)
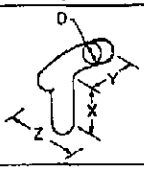	J-bar	50 (2)	100 (4)	75 (3)
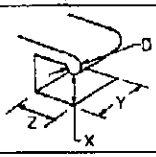	Two-finger recess One-hand recess	32 (1–1/4) 50 (2)	65 (2–1/2) 110 (4–1/4)	75 (3) 90 (3–1/2)
	Finger-tip recess One-finger recess	19 (3/4) 32 (1–1/4)	– –	13 (1/2) 50 (2)

Curvature of handle or edge (DOES NOT PRECLUDE USE OF OVAL HANDLES)	Weight of Item	Minimum diameter	
	Up to 6.8 kg (up to 15 lbs)	D = 6 mm (1/4 in)	Gripping efficiency is best if finger can curl around handle or edge to any angle of 2/3 π rad (120°) or more
	6.8 to 9.0 kg (15 to 20 lbs)	D = 13 mm (1/2 in)	
	9.0 to 18 kg (20 to 40 lbs)	D = 19 mm (3/4 in)	
	Over 18 kg (over 40 lbs)	D = 25 mm (1 in)	
	T-bar post	T = 13 mm (1/2 in)	

Figure 11.6.3.4-1 Minimum IVA Handle Dimensions for IVA Applications

MSIS 18

e. Microgravity Posture - Personnel restraints to be used in microgravity applications shall be designed for microgravity posture compatibility.

(Refer to Paragraph 3.3.4.3, Neutral Body Posture Data - Design Requirements, *for specific anthropometric requirements.)*

f. Cleaning and Repair - The personnel restraint system shall be capable of being cleaned and repaired on-orbit.

11.7.2.3.2 Foot Restraint Design Requirements

11.7.2.3.2.1 General Foot Restraint Design Requirements

The following general requirements apply to all fixed and portable foot restraints:

(Refer to Paragraph 14.4.3.4, EVA Crew Restraint Design Requirements, for EVA-unique foot restraint requirements.)

a. Range of Motion - All foot restraints shall maintain foot position to allow the crewmember a complete range of motion (roll, pitch, and yaw).

b. Comfort - Foot restraints shall provide comfortable support.

c. Interchangeability - Attachment interfaces for foot restraints (portable-to-portable and fixed-to-fixed) shall be interchangeable throughout the space module.

d. Positive Retention - The foot restraint shall be positive and firmly hold the user in the desired position.

e. Load Reaction - Foot restraints shall provide the capability to react to loads applied by the crewmember.

f. Abrasion Resistance - Reinforcements shall be provided for any fabric areas exposed to high abrasion.

g. Ventilation - IVA foot restraints and covers shall allow ventilation to the feet.

h. Fixed Foot Restraints - The fixed foot restraint shall be capable of being removed for replacement/repair.

i. Portable Foot Restraints - The portable foot restraint shall be capable of being installed and removed easily and quickly without tools.

11.7.2.3.2.2 Foot Restraint Donning/Doffing Design Requirements

Foot restraints shall comply with the following donning and doffing requirements:

(Refer to Paragraph 14.4.3.4, EVA Crew Restraint Design Requirements, for EVA-unique foot restraint donning and doffing requirements.)

a. Donning - Foot restraints shall be attached or donned with minimum effort.

b. Quick Release - Rapid ingress/egress shall be inherent to all IVA foot restraints.

c. No-Hand Operation - The use of hands for placing/ removing the foot shall not be required for foot restraint ingress/egress.

d. Handholds - Handholds or structure between waist and shoulder shall be available at all foot restraint locations to aid foot restraint ingress and egress.

   (Refer to Paragraph 8.9.3.1, Required IVA Mobility Aid Integration Design Requirements, for the specific requirements.)

e. Entrapment - All foot restraints shall minimize danger of entrapment. A positive means of releasing the foot from the restraint shall be provided.

11.7.2.3.2.3 Foot Restraint Loads Design Requirements

IVA restraints must meet the following load requirements:

(Refer to Paragraph 14.4.3.4, EVA Crew Restraint Design Requirements, for EVA restraint loads.)

a. Tension Loads - Foot restraints shall be designed to withstand a tension load of 445 N (100 lbf) as a minimum (see Figure 11.7.2.3.2.3-1.)

b. Torsion Loads - The restraints shall withstand a torsion load of 200 Nm (150 ft-lb) as a minimum with the torsion vector normal to the floor. (See Figure 11.7.2.3.2.3-1.)

c. Factor of Safety - The yield factor of safety shall be 1.10 and ultimate factor of safety shall be 2.00.

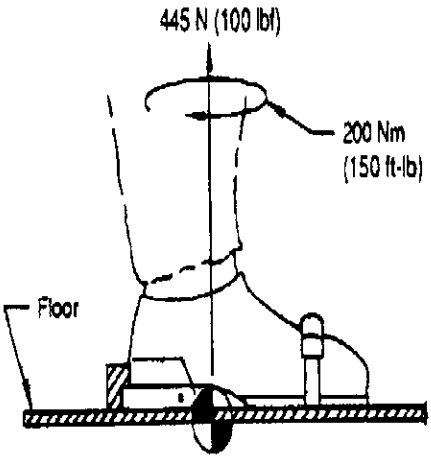

Figure 11.7.2.3.2.3-1 IVA Foot Restraint Load Limits

MSIS 19

11.7.2.3.2.4 Foot Restraint Durability and Color Design Requirements

The durability and color of IVA and EVA foot restraints shall comply with the following:

a. Durability - Finish shall be durable, smooth, and scratch resistant to prevent undue wear on footwear.

b. Color - Color for all foot restraints of a given type shall have a contrast ratio of approximately 10:1 or greater with the background.

11.7.2.3.3 Body Restraint **Design Requirements**

11.7.2.3.3.1 Body Restraint Donning/Doffing Design Requirements

The following crewmember body restraint donning and doffing requirements shall apply to all tether attachments, seat belts, and shoulder harnesses:

a. Latching Mechanisms - The latching mechanism attachment will require a positive action by the crewmember to both latch and unlatch the mechanism.

b. One-Handed Operation - The latching mechanism shall have the capability of being latched and unlatched with one hand.

11.7.2.3.3.2 Body Restraint Loads Design Requirements

The following load requirements shall apply to seat belts, shoulder harnesses, and IVA tethers:

(Refer to Paragraph 14.4.3.4, EVA Crew Restraint Design Requirements, for EVA-unique body restraint load requirements.)

a. Seat Belts and Shoulder Harnesses - IVA seat belts and shoulder harnesses installed at stations designated as occupied during launch and landing shall be designed so the occupant making proper use of the equipment will not suffer serious injury when the following ultimate inertia forces acting separately are imposed on the crewmember:

   1. Downward (Eyeballs Up): 2.0 -Gz

   2. Backward (Eyeballs Out): 9.0 -Gx

   3. Sideward : 1.5 +/- Gy

   4. Upward (Eyeballs Down): 4.5 +Gz , or any lesser force that will not be exceeded when the landing loads resulting from impact with an ultimate descent velocity of five ft/sec at design landing weight.

      (Refer to Paragraph 5.3.3.1, Linear Acceleration Design Requirements for acceleration coordinate system and requirements.)

b. Tether Attachments - IVA tether attachments shall be capable of sustaining a load of 756 N (170 lbs) along the longitudinal axis. They shall be designed so as to preclude any side loading.

c. Attach Points for Tether Attachment - IVA translation and mobility handhold tether attachment attach points shall be designed to a minimum ultimate load of 1113 N (250 lbs) in any direction.

11.7.2.3.3.3 Body Restraint Finish and Color Design Requirements

Markings, labeling, and colors shall be in accordance with Paragraph 9.5.

11.7.2.3.3.4 Body Restraint Dimensional Design Requirements

The following dimensional requirements shall apply to all seat belts, shoulder harnesses, and tethers:

(Refer to Paragraph 14.4.3.4, EVA Crew Restraint Design Requirements, for EVA-unique restraint dimensional requirements.)

a. Commonality - Seat belts, shoulder restraints, waist restraints, and tether attachments shall be uniform in size, shape, and method of operation within the limits of task performance and other design tradeoffs.

b. Size - Task requirements for which the attachment is designed shall dictate the actual size of the hooking and latch mechanism.

11.7.2.3.4 Sleep Restraints Design Requirements

Sleep restraint design shall meet the following requirements:

a. Extremity Restraint - Sleep restraints shall include provisions to prevent leg and arm float and prevent the head from moving during sleep.

b. Trapped Air - Sleep restraint design shall eliminate excessive or unevenly distributed trapped air.

c. Individual Sleep Restraints - One sleep restraint shall be provided for each crewmember.

d. Stowage, Transport, Cleanability - Sleep restraints shall be easily stowable, transportable, and cleanable on-orbit.

e. Features - A sleep restraint shall incorporate the following features:

1. Adjustable, flexible restraint straps.

2. Arm slits.

3. Adjustable, removable pillows/head-strap.

4. Adjustable thermal protection.

f. Opening/Closing - A sleeping bag opening/closing device that extends the full length of the bag shall be provided.

g. Torso Restraint - Torso restraining straps shall be provided to allow the crewmembers to restrain themselves in their choice of sleeping position.

h. Opening/Closing - The opening/closing device shall be capable of easy use, including quick opening in case of emergency.

i. Opening/Closing Device Replacement - The opening/ closing device shall be easily replaceable.

11.7.3.3 Equipment Restraint Design Requirements

All IVA and EVA equipment restraints shall be designed to the following requirements:

a. Hand Operated :

1. Equipment restraints shall be designed such that tools are not required to attach or detach the restraint.

2. Equipment restraints shall be designed such that they can be attached/detached by either the left or right hand.

b. Blind Operation - The equipment restraints shall be designed such that they can be attached/detached without having to look at them.

c. Adjustability - Provide the capability to adjust the restraint to adapt to a wide range of sizes of the items to be restrained and to provide the user with the capability to restrain the item at a preferred location relative to the restraint attachment points. This does not preclude fixed- length tethers used for specific applications.

d. Positive Restraint - The restraint shall secure the item in such a way that the item will not come loose due to inadvertent touching, air currents, vehicle dynamic motions, or due to other predictable environmental conditions.

e. Cause No Damage - The equipment restraint shall be designed such that it cannot pinch, abrade, or cut the item to be restrained or the interfacing surfaces and adjacent hardware.

f. No Adhesive Residue - Adhesive equipment restraints shall not leave an adhesive residue on the item or on the spacecraft surface when the adhesive restraint is detached.

g. Tethers :

1. Common attachment method - All equipment tethers shall use a common attachment method.

2. *Tether attachment points - All equipment items that require tethering shall* have a standardized tether hook receptacle as an integral part of the item. This standardized receptacle shall also be provided on the interfacing surface to which the item is to be secured.

3. Tether lock status indication - The tether hook shall be designed in such a way that it will be easy to recognize when the hook is locked/unlocked in both day and night lighting conditions.

h. Loads :

1. Minimum load - The minimum design load shall be based on the expected crew-imposed and environmental loads to be applied to the item in the normal operating conditions.

2. Maximum load - The maximum design load shall be based on the resultant load imposed by a crewmember attempting to dislodge a restrained item that has become entrapped in adjacent hardware. The stress of this activity should not exceed the design load of the surface to which the restraint is attached or the design load of the entrapping hardware (i.e., the restraint should break before the item, attachment surface, of entrapping hardware breaks).

(Refer to Paragraph 4.9.3, Strength Design Requirements, for definition of maximum crew imposed loads.)

i. Color - Equipment restraints shall be of a standardized color to distinguish them from other types of loose equipment or items that will be restrained.

(Refer to Paragraph 9.5.3.2, Coding Design Requirements, for color selection criteria.)

j. Grounding :

(Refer to Paragraph 6.4.3, Electrical Hazards Design Requirements, for specific requirements.)

k. Commonality - Provide commonality of design for equipment restraints to the maximum extent possible.

l. Individual Restraints :

1. Individual restraints shall be designed to restrain one hardware item only.

2. Individual restraints shall be used when the restrained item is large in size, sensitive, or delicate or when attachments are difficult or complex in operation

m. Group Restraints :

1. Group restraints shall be used to restrain like-sized items wherever possible.

2. Group restraints shall provide a system that allows the removal of one item at a time.

n. Throw-Away Restraints - Any restraint device that is utilized during vehicle launch, and upon activation or usage removal is discarded, shall meet the following requirements:

1. Large throw-away restraints shall be designed to be torn apart or be of soft, crushable materials to accommodate the openings of onboard trash collection/disposal systems.

2. The throw-away restraints shall be color coded as a throw -away item.

(Refer to Paragraph 9.5.3.2, Coding Design Requirements, for specific requirements.)

o. Velcro - When Velcro is used as a restraint, the item to be restrained will be equipped with hook-type Velcro and the restraining surface will be equipped with pile-type Velcro.

11.8.2.2 Handhold and Handrail Design Requirements

11.8.2.2.1 Handhold and Handrail Dimensions Design Requirements

All handholds and handrails shall adhere to the following cross-section design requirements:

a. Standardization - Cross-sectional dimensions of handholds and handrails shall be standardized throughout the space module to provide a uniform interface for mounting items such as brackets and tether hooks.

b. Cross-Section Shape - Handholds and handrails cross-section shape shall be designed such that the crewmember's hand or attached brackets will be stabilized (i.e., circular cross-section shall not be used).

c. IVA Handhold Minimum Dimensions - All IVA handholds shall have a minimum of 14 cm (5.5 in.) grip length and a minimum of 3.8 cm (1.5 in.) clearance between the lower surface of the handgrip and the surface on which it is mounted. (Reference Figure 11.8.2.2.1-1.)

(Refer to Paragraph 11.8.2.2.3, Handhold and Handrail Texture Design Requirements, for other shape requirements.)

(Refer to Paragraph 14.5.3.2, EVA Mobility Aids Design Requirements, for EVA-unique handhold/handrail dimensions.)

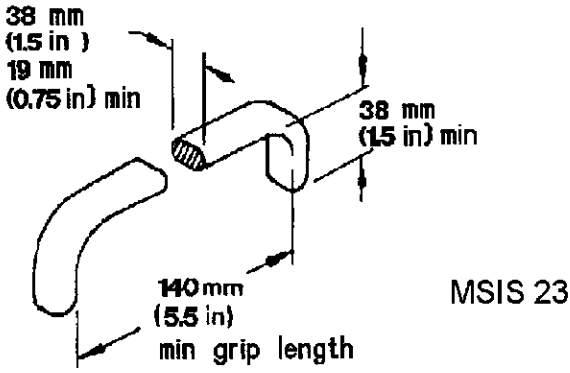

Figure 11.8.2.2.1-1 Example IVA Handhold Configuration Used In Previous U.S. Space Modules

11.8.2.2.2 Handhold and Handrail Coding Design Requirements

Handholds and handrail coding shall be such that the crew may locate them with ease:

a. Standard Color - The color of all handholds/ handrails shall be standardized within the space vehicle.

b. Contrast Ratio - The color value shall have a contrast ratio of 3:1 or greater with the background.

c. Distinguishing Color - The handhold/handrail shall be distinguishable from the surrounding area.

(Refer to Paragraph 9.5.3, Labeling and Coding Design Requirements, for other general and specific color coding requirements.)

11.8.2.2.3 Handhold and Handrail Finish Design Requirements

Handhold and handrail texture shall be such that the crew may locate them by feel and grasp them with ease:

a. Identical Finish - The finish of all handholds/ handrails shall be identical to enhance identification.

b. Safety - Handholds and handrails shall have a smooth surface with no burrs, sharp edges, or protrusions.

   (Refer to Paragraph 6.3.3, Mechanical Hazards Design Requirements, for other applicable requirements.)

c. Durability - The finish of all handholds and handrails shall be resistant to scratches, wear, flaking, and pealing.

11.8.2.2.4 Handhold and Handrail Design Loads Design Requirements

All fixed and portable IVA handholds and handrails shall be designed to a minimum ultimate load of 1113 N (250 lbs) applied in any direction without failure or damage that precludes full utilization by crewmembers.

(Refer to Paragraph 14.5.3.2, EVA Mobility Aid Design Requirements, for EVA-unique handhold/handrail design load requirements.)

11.8.2.2.5 Handhold and Handrail Temperature Design Requirements

(Refer to Paragraph 6.5.3, Surface Touch Temperature Design Requirements, for IVA handhold and handrail surface temperature design requirements.)

(Refer to Paragraph 14.5.3.2, EVA Mobility Aid Design Requirements, for EVA-unique handhold and handrail surface temperature design requirements.)

11.8.2.2.6 Handhold and Handrail Mounting Design Requirements

a. Stability - All fixed and portable handholds and handrails shall be designed so that when installed there is no instability (i.e., looseness, vibration, or slippage).

b. Portable Handhold and Handrail Lock Status Indication - Portable handhold and handrails shall provide a positive indication of when they are in the locked position.

c. Visibility and Accessibility - Handholds and handrails shall be mounted so that they are clearly visible and accessible.

   (Refer to Paragraph 8.9.3.1, IVA Mobility Aid Locations - Design Requirements, for specific requirements.)

   (Refer to Paragraph 11.8.2.2.2, Handhold and Handrail Coding Design Requirements, for color coding requirements.)

d. Handhold Removal - Fixed handholds shall be removable with common tools.

e. Safety - Handrails and associated mounting provisions shall be designed so as to preclude snagging of body, clothing, and/or loose equipment (e.g., cables).

11.8.3.2 Equipment Mobility Aid Design Requirements

(Refer to Paragraph 11.6.3, Handle and Grasp Area Design Requirements, for interface requirements.)

(Refer to Paragraph 11.7.3.3, Equipment Restraint Design Requirements, for interface requirements.)

(Refer to Paragraph 14.5.3.6, EVA Equipment Transfer Design Requirements, for EVA unique requirements.)

a. Maximum Movable Equipment Size - Equipment size shall be limited to the dimensions and configuration of the smallest hatch or opening through which the equipment must pass.

b. Access - Design shall provide adequate area around the mass for manipulation and visibility.

c. Containers for Small Items - Containers shall be provided for simultaneous transfer of small equipment items.

   1. Single items shall be individually removable

   2. The container shall be easily attached to the crewmember and space module at the worksite.

d. Bump Protection - Bump protection shall be provided. Bump protectors shall be designed so they can be used as mobility aids.

11.9.3 Fastener Design Requirements

11.9.3.1 General Fastener Design Requirements

a. Commonality - The number and diversity of fasteners shall be minimized commensurate with the structural requirements imposed by the physical environments.

b. Easily Distinguishable - Where different types of fasteners must be used, they shall be such that they are readily distinguishable from each other.

c. Hand-Actuated Fasteners Preferred - Hand-actuated fasteners shall be given preference over tool-actuated fasteners, provided that size, location, and structural constraints are met.

   (Refer to Paragraph 11.9.3.2, Hand-Actuated Fastener Design Requirements, for specific requirements.)

   (Refer to Paragraph 11.9.3.3, Tool-Actuated Fastener Design Requirements, for specific requirements.)

d. Other Devices in Lieu of Fasteners - Optimum use shall be made of mechanical devices (e.g., hinges and tongue-and-slot catches) to minimize the number of fasteners.

e. Captive Fasteners - All fastener components intended for crew interaction shall be captive. All replaceable fasteners shall be amenable to loose parts control and a means of fastener containment and/or restraint shall be incorporated in the fastener removal/replacement system.

f. Accessibility :

   (Refer to Paragraph 11.2.3.6, Tool Access Design Requirements, for specific tool clearance dimensions.)

   1. Location Near Corners - Fasteners shall be located far enough away from internal corners, wall edges, flanges, etc., that they can be manipulated with ease.

2. Separation - Fasteners shall be located far enough apart so there is adequate hand or tool clearance.

3. Location Near Adjacent Equipment - If a component is to be mounted near other pieces of equipment, fasteners shall be located away from the edges of the adjacent equipment, obstructions, or surfaces that will prevent the attachment of tools.

4. Direct Access - Locate fasteners so that they can be actuated without removing other parts or units first.

5. Access Holes - Covers or shields through which mounting fasteners must pass for attachment to the basic chassis of the unit shall have large enough holes for passage of the fastener without precise alignment (and tool/hand if tool/hand is required to replace).

g. One Handed Actuation - All fasteners shall be designed to be actuated by one hand.

h. Engagement Status Indication - Incorrect engagement of fasteners shall be apparent.

i. Multiple Fasteners :

1. Number of Fasteners - When several fasteners are required, the design shall use the minimum number of the largest size fasteners of identical type.

2. Arrangement - When several fasteners are used on one item, they shall be arranged so that the unit can be assembled in only the correct manner.

j. Safety - Fasteners shall be designed so as to preclude injury to the crewmember when the fastener is released.

k. Labeling - Appropriate markings shall be placed on fasteners that can be actuated by either hand or tool .

(Refer to Paragraph 9.5, Labeling and Coding, for specific considerations and requirements.)

l. Replacement - All fasteners shall be de- signed for on-orbit replacement.

(Refer to Paragraph 11.2.3.2 d., Fastener Tools, for specific requirements.)

11.9.3.2 Hand-Actuated Fastener Design Requirements

a. One-Handed/Either-Hand Actuation - Hand-actuated fasteners shall be designed to be actuated by one hand and by either the left or right hand.

b. Designed for Launch and On-Orbit - Fasteners shall be designed to meet the launch loads as well as on-orbit loads.

c. Fastener Knobs - Fastener knobs shall be textured.

(Refer to Paragraph 6.3.3, Mechanical Hazards Design Requirements, for specific safety design requirements.)

d. Quick-Opening Fasteners - Quick-opening captive fasteners shall:

1. Require a maximum of one complete turn to operate (quarter-turn fasteners are preferred).

2. Require only one hand to operate.

3. Be positive locking in open and closed position.

e. Locking Threaded Fasteners - Hand-actuated threaded fasteners shall have a locking feature that provides an audible, tactile, or visual feedback to the crewmember. Such locking features shall assure that threaded fasteners will not un-thread themselves without crew actuation.

f. Pin Fasteners (IVA) :

1. Designed for launch only - Pin fasteners shall be used for launch loads only.

2. Locking devices - Locking devices used in conjunction with pin fasteners shall be made accessible and easily visible.

g. Over-Center Latches :

1. Non-self-latching - Over-center latches shall include a provision to prevent undesired latch element realignment, interference, or reengagement.

2. Latch lock - Whenever possible, latch catches shall be spring loaded to lock on contact, rather than using a positive locking device. If positive locking is necessary, provide a latch loop and locking action.

3. Latch handles - If the latch has a handle, locate the latch release on, or near the handle so it can be operated with one hand.

h. Safety Wire - Safety wires shall not be used on fasteners.

11.9.3.3 Tool-Actuated Fastener Design Requirements

(Refer to Paragraph 11.9.3.4, IVA Fastener Design Requirements, for IVA-specific tool-actuated fastener requirements.)

(Refer to Paragraph 11.2.3, Tool Design Requirements, for specific requirements for the tools to be used to actuate the tool-actuated fasteners.)

a. Nonstandard Tools - Fasteners requiring nonstandard tools shall not be used.

b. High-Torque Fasteners (IVA Only) - External hex or external double-hex fastener heads are preferred and they shall be provided on all machine screws, bolts, or other fasteners requiring more than 14 Nm (10 ft-lbs) of torque. Internal wrenching fasteners shall be Allen-head-type fasteners.

c. Low-Torque Fasteners :

1. Hex-type internal grip head, hex-type external grip head, or combination-head (hex or straight-slot internal grip and hex-type external grip head) fasteners shall be used where less than 14 Nm (10 ft-lb) of torque is required.

2. Internal-grip head fasteners shall be provided only where a straight or convex smooth surface is required.

3. No straight-slot or Phillips-type internal grip fasteners shall be used.

d. Precision Torquing - When possible, design equipment so that precise torque on fasteners is not required. Where precise torque or preload is required, use fasteners that incorporate torque-indicating features or that will mate with appropriate on-board torquing tools.

e. Torque Labeling - When fastener torquing to specifications is required, an instructional label shall be provided in reasonable proximity to the fasteners.

(Refer to Paragraph 9.5, Labeling and Coding, for specific requirements.)

f. Number of Turns - When machine screws or bolts are required, the number of turns and the amount of torque shall be no more than necessary to provide the required strength.

g. Fastener Head Length (IVA Only) - Fastener heads shall be as short as possible so they will not snag personnel clothing or equipment.

h. Left-Hand Threads - Left-hand threads shall not be used unless system requirements demand them; then identify both the bolts and nuts clearly by use of markings, shape, color, etc.

i. Locking - Threaded fasteners shall incorporate features that allow them to be locked so that they will not unthread without using a tool.

j. Hand Tool Operable - All fasteners installed with power tools shall be removable with a hand-operated tool.

11.9.3.4 IVA Fastener Design Requirements

a. Fastener Lubrication - IVA fasteners that require lubrication shall use an approved lubricant or plating material.

b. Cadmium Plating - Cadmium-plated IVA fasteners shall not be used.

c. Wing-Head Fasteners - Wing-head IVA fasteners shall fold down and be retained flush with surfaces so they will not snag personnel, clothing, or equipment.

d. Cotter Keys :

1. Fit - Keys and pins shall fit snugly without requiring being driven in or out using a tool.

2. Large heads - Cotter keys shall have large heads for easy removal by hand.

3. Cotter keys shall not be used EVA.

e. Access - Minimal requirements for access and/or clearance areas for tool-actuated fasteners shall be as shown in Figures 11.2.3.6-1 and -2.

(Refer to Paragraph 11.2.3.6, Tool Access Design Requirements, for specific access requirements.)

f. Tool-Actuated Fastener Head Types - In addition to the general tool-actuated fastener design requirements given in Paragraph 11.9.3.3, the following IVA-specific tool- actuated fastener selection requirements shall apply: (NOTE: Special mission or program requirements may create the need to use other types of fastener heads than those listed below.)

1. Fastener heads directly exposed to crew impact shall meet the requirements for burrs, edges, and sharp corners, or shall be provided with protective covers or they shall be flush with surface.

(Refer to Paragraph 6.3.3, Mechanical Hazards Design Requirements.)

2. Fastener heads not directly exposed to crew impact within habitability and stowage areas shall be internal or external hex head.

g. Due to Potential toxicity/particulate contamination hazards associated with the use of anti-sieze and positive locking compounds, designers should avoid the need for the use of such chemicals, if at all possible.

11.10.3 Connector Design Requirements

a. One-Handed Operation - All connectors, whether operated by hand or tool, shall be designed so they can be mated/demated using one hand.

b. Accessibility - It shall be possible to mate/demate or replace individual connectors *without having to remove or replace other connectors*. *Quick* Disconnects (QDs) that are designed to be operated under pressure will not require pressure/flow indicators.

11.10.3.1 Fluid Connectors Design Requirements

a. Fluid Line Connectors - All brazed or welded gas and liquid lines shall be provided with convenient-to-use, permanently installed connectors that permit on-orbit maintenance.

(Refer to Paragraph 12.3.1.4, Removal, Replacement and Modularity Design Requirements, for fluid and gas line isolation valve requirements.)

b. Indication of Pressure Flow - All liquid and gas lines shall be provided with a positive indication of the gas pressure/fluid flow to verify that the line is passive before disconnection of connectors. Quick Disconnects (QDs) that are designed to be operated under pressure will not require pressure/flow indications.

c. Fluid Loss - Liquid and gas connectors shall be designed to minimize escape or loss of fluids, particularly any toxic materials, during connect or disconnect operations.

11.10.3.2 Electrical Connectors Design Requirements

a. Ease of Disconnect - Electrical connector plugs shall require no more than one turn to disconnect or some other quick disconnect design shall be provided.

b. Self-Locking - Electrical connector plugs shall provide a self-locking safety catch.

c. Access - Electrical connectors and cable installations shall be designed with sufficient flexibility, length, and protection to permit disconnection and reconnection without damage to wiring or connectors.

(Refer to Paragraph 11.14.3, Cable Management Design Requirements, for other related requirements.)

d. Arc Containment - Electrical connector plugs shall be designed to confine/isolate the mate/demate electrical arcs or sparks.

(Refer to Paragraph 6.4.3, Electrical Hazards Design Requirements, for specific electrical safety requirements.)

e. Contact Orientation - All efforts shall be made to arrange contacts within connectors such that when the connectors are demated there will be no voltage potential on exposed male pins.

11.10.3.3 Structural Connectors Design Requirements

a. Alignment Provisions - All structural connectors shall incorporate alignment features.

(Refer to Paragraph 11.10.3.5, Connector Identification/Alignment Design Requirements, for specific requirements.)

b. Soft Latching - All structural connectors shall provide the capability to "soft-latch" prior to full firm connection or full release.

c. Lock Indication - All structural connectors will provide an indication of positive locking.

11.10.3.4 Optical Connectors Design Requirements

All fiber optic connectors shall be designed so that proper geometric alignment and abutment maintains signal fidelity.

(Refer to Paragraph 11.10.3.5, Connector Identification/Alignment Design Requirements, for specific requirements.)

11.10.3.5 Connector Identification/Alignment Design Requirements

a. Connector Shape - Use connectors that are clearly different and physically incompatible when lines differ in content (i.e., different voltages, liquids, gases).

b. Alignment Provisions:

1. Mating connectors shall be provided with aligning pins or equivalent devices to aid in alignment and to preclude inserting in other than the disired orientation.

2. If aligning pins are used on electrical connectors, they shall extend beyond the plug's electrical pins to ensure that alignment is obtained before the electrical pins engage.

c. Keying:

1. Symmetrical arrangement of aligning pins or keys shall be avoided to prevent connectors from being mismated.

(See Figure 11.10.4-2, Electrical Connector Keys and Keyways, and Figure 11.10.4-3, Arrangement of Guide Pins.)

2. The mechanical keys shall prevent incorrect connection with other accessible connectors, plugs, or receptacles.

d. Alignment Marks:

1. Alignment marks shall be applied to mating parts if the proper interface orientation is not obvious by virtue of geometry.

2. The marks shall consist of a straight line of a width and length appropriate to the size of the items and shall be located so as to be easily seen by the crewmember both before and after mating/demating operations.

e. Coding:

1. Both halves of mating connectors shall display a code or identifier unique to that connection.

2. Labels or codes on connectors and associated items shall be located so they are visible when connected or disconnected.

(Refer to Paragraph 9.5.3, Labeling and Coding Design Requirements, for specific requirements.)

f. Pin Identification - Each pin shall be clearly identified in each electrical plug and each electrical receptacle.

g. Orientation - Grouped plugs and receptacles shall be oriented so that the aligning pins or equivalent devices are in the same relative position (i.e., all keyed connectors oriented the same direction - key up).

h. Loose Hoses or Cables :

1. If the connectors on the ends of a loose electrical cable or fluid hose are not identical, each end shall be uniquely identified to prevent improper usage.

2. The loose ends of hoses and cables shall be restrained to prevent them from floating out of reach and to avoid injury to crewmembers and damage to equipment.

11.10.3.6 Connector Arrangement Design Requirements

a. Hand Access - Connectors shall be spaced far enough apart so that they can be grasped firmly for connecting and disconnecting.

b. Adjacent Connectors or Obstructions - Space between a connector and any adjacent obstruction shall be compatible with the size and shape of the plugs.

c. Single Rows - Connectors in a single row which require removal and replacement by the crew (IVA) shall be a minimum of 25 mm (1 in.) apart (edge-to-edge) for hand access during alignment and insertion. A separation of 41 mm (1.6 in.) is required for EVA and preferred for IVA. (See Figure 11.10.3.6-1.)

d. Staggered Rows - Staggered rows of connectors shall be a minimum of 64 mm (2.5 in) apart - IVA and EVA, (see Figure 11.10.3.6-2).

e. Tools - If a tool is used, the hand access clearance is still required to facilitate initial alignment by hand.

11.11.3 Window Design Requirements

This section provides the design requirements for the optical characteristics, visual protection, physical protection, and maintenance for the two types of windows to be utililized in Space Station Freedom. These requirements apply to test conditions prior to launch.

(Refer to Paragraph 8.11.3, Window Integration Design Requirements, for window architectural integration requirements.)

(Refer to Paragraph 9.2.5.1.2 Window Workstation Design Requirments, for additional requirements when the window will be used in conjunction with controls, displays, restraints, etc.)

11.11.3.1 General Viewing Window Requirements

11.11.3.1.1 Window Size

a. Hatch windows shall be a minimum of 20.3 cm (8 in) diameter.

b. General area windows shall be a minimum of 50.8 cm (20 in) in height and width or diameter.

11.11.3.3 Visual Protection Design Requirements

a. Sun Shields/Shades :

1. Sun shields - All viewing windows shall be provided with crew-operated, opaque sun shields capable of restricting all sunlight from entering the habitable compartments.

2. External sun shades repositioning - If external shades are designed to cast a shadow over a window, they shall be provided with a means to be remotely repositioned by the window user.

b. Radiation Protection :

1. Infrared - The maximum transmissivity of infrared shall be no more than 10% (density = 1) in the range of 800 to 1200 nm.

2. Ultraviolet - The maximum transmissivity of ultraviolet shall be no more than 0.001% (density = 10E-5) in the range of 200 to 300 nm.

3. Heat rejection - The sun shade, whether internal or external, shall be capable of rejecting radiant energy away from the window assembly.

(Refer to Paragraph 5.7.2.2, Ionizing Radiation Design Requirements, for specific ionizing radiation exposure limits).

(Refer to Paragraph 5.7.3.2, Nonionizing Radiation Design Requirements, for nonionizing radiation exposure requirements.)

4. Window design shall be coordinated with other shielding protection design to achieve less than, or equal to, the allowable radiation dosages given in these paragraphs.

c. Optical Filters - Optical filters shall be provided to meet visual protection requirement if operational functions require light transmissivity in excess of the requirements given in item b, above.

11.11.3.4 Physical Protection Design Requirements

a. External Surface Contamination Protection - Window design shall take into account all sources of external contamination and shall provide means for cleaning or replacing when degradation exceeds optical transmissivity requirements.

b. Between-Pane Contamination Protection - Window design shall take into account all sources of contamination that can occur between the transparency panes and shall provide a means for preventing or minimizing optical degradation due to these contaminants.

c. Internal Surface Contamination Protection - Window design shall take into account all sources of internal surface contamination and provide means for preventing or minimizing optical degradation due to these contaminants.

1. Antifogging - All innermost panes shall be designed for antifog protection such that breath condensation does not occur from a mouth-to-pane distance of 10 cm (4 in.).

2. Inner Pane Coatings - The innermost pane shall have no coatings except for antireflective coatings.

d. Impact Load Protection - The window assembly shall be capable of withstanding a blunt object impact load of 550 N (125 lb) from any angle of incidence.

e. Protective Covers - Removable or retractable protective covers shall be provided where the window assembly does not meet crew and equipment impact load criteria or the launch and reentry pressure profiles.

f. Retractable External Protective Covers - If external protective covers are opaque, then IVA controls shall be provided with a backup EVA capability to override the IVA system.

11.11.3.5 Window Maintenance Design Requirements

a. Window Servicing - Equipment and supplies shall be provided for efficient contingency window cleaning.

b. Protective Covers - Where surface scratching, pitting, or staining cannot be prevented by other means, provide removable window protective surfaces.

c. Window Replacement - Window assemblies shall be designed to eliminate the need for depressurizing modules in order to replace window panes or the entire window assembly.

(Refer to Paragraph 12.0, Design for Maintainability, for general and specific maintainability design considerations and requirements.)

11.12.3 Packaging Design Requirements

a. Compatible With Stowage - All packaging must conform to the stowage space available.

(Refer to Paragraph 10.12.3, Stowage Facility Design Requirements, for specific requirements.)

b. Compatible With Environments - All packaging must be able to resist physical environment exposure to which it will be exposed during ground handling, ground and air transportation and launch, on-orbit and (if returnable) entry operations.

c. Compatible With Contents - All packaging must be able to resist the physical characteristics of its contents for the maximum time duration for which the contents must be packaged.

d. Compatible With Trash Disposal System - All non-reusable packaging must be compatible with the trash collection and disposal system.

(Refer to Paragraph 10.11.3, Trash Management Facility Design Requirements, for specific requirements.)

e. Packaging Restraint - Provide means for physically attaching or restraining the package at all locations where the package may have to be temporarily placed during use.

f. Labeling - All packages shall be clearly labeled as to their contents.

(Refer to Paragraph 9.5.3.1.9, Stowage Container Labeling Design Requirements, for specific labeling requirements.)

g. Inventory Control Compatibility - All packages shall be designed to incorporate the coding features required by the inventory control system.

(Refer to Paragraph 13.3.3, Inventory Control Design Requirements, for specific requirements.)

h. Ease of Use :

1. All packaging shall be designed to be usable without extensive manipulation of the packaging materials.

2. All packaging shall be designed to provide efficient and convenient means of opening and where necessary, closing/resealing the package.

i. Sizing - All packages shall be sized to be optimally suited for ease of handling and rate of consumption.

j. Hazards :

1. Packaging that incorporates pull-tabs, lids, and other easy opening features shall be designed such that the crewmember will not be injured during normal use of the feature.

(Refer to Paragraph 6.3.3, Mechanical Design Requirements, for specific safety requirements.)

2. Packaging materials shall not introduce contaminants into the atmosphere.

(Refer to Paragraph 5.1.3, Atmosphere Design Requirements, for specific contamination requirements.)

k. Loose Packaging Materials - Loose, void-filling materials shall not be used within a package.

l. Mobility Aids - Provide interfaces on the package for the attachment of equipment mobility aids if necessary for the application.

(Refer to Paragraph 11.8.3, Equipment Mobility Aids Design Requirements, for specific requirements.)

11.13.1.3 Clothing Design Requirements

11.13.1.3.1 General Clothing Design Requirements

(NOTE: In this paragraph, the word "garments" is used to include outerwear, underwear, footwear, gloves, and headwear.)

a. Suitable for the Environment :

1. Garments shall be provided to protect the user from the full range of anticipated working and off duty environments in the space module.

2. Garments to be used in microgravity or partial gravity shall incorporate features that make the garment suitable for use in these environments.

b. Comfort and Freedom of Movement - Wearing comfort and freedom of movement shall be emphasized in the design and materials selection of garments.

c. Wearer Effects - The effects from the wearer's body heat generation, skin and hair flaking and loss, and perspiration shall be considered in the design of the of the garments and selection of materials.

d. Materials and Fabrics - Garment materials shall be selected taking into account the following factors: similarity to Earth garments, flammability, comfort, chemical stability, moisture absorption, water compatibility, tensile strength, abrasion resistance, flexural endurance, wrinkle/shape recovery, cleaning compatibility, electrostatic performance, crease resistance, and freedom from linting.

e. Sizing - The range of sizes available shall be sufficient to provide adequate fit and comfort for the crewmember population without resorting to personalized, custom-fitted garments.

(NOTE: Microgravity or partial gravity anthropometric changes must be accommodated.)

f. Exclusive Use - All crewmembers shall be provided with garments for their exclusive use.

g. Unassisted Donning/Doffing - All garments shall be capable of being donned/doffed by a crewmember unassisted in normal and emergency situations and operational environments (Emergency mode donning/doffing should preferably use the normal mode closures and fasteners).

h. Off-the-Shelf Garments - Off-the-shelf, commercially available garments shall be used if possible.

i. Personal Preferences - Provide garment options that allow crewmembers to select various styles, combinations of garments, different colors and different pocket styles and cuffs.

j. Aesthetics - Garment esthetics and overall appearance shall be a very important design factor.

k. Outerwear Hazards - All outerwear garments shall be free of loops, straps, and other obstructions that can snag on equipment.

l. Inner Surface Hazards - All inner surfaces of garments shall be free of items which can impede free movement, scratch or chafe the wearer.

(Refer to Paragraph 6.3.3, Mechanical Hazards Design Requirements, for specific requirements.)

11.13.1.3.2 Clothing Packaging and Storage Design Requirements

All IVA garments (outerwear, innerwear, footwear, gloves, and headwear) shall be designed to provide the following packaging and storage requirements:

(Refer to Paragraph 11.12, Packaging, and Paragraph 10.12, Stowage Facility, for other requirements.)

a. Identification/Removal from Stowage - Garment packaging and stowage for delivery to orbit shall be designed to make it easy to identify the type and size of garment and to remove the garment from packaging.

b. Preserve Garment Appearance - Stowage and packaging of clean garments must be designed to preserve the garment appearance.

c. Soiled Garment Storage - Temporary stowage for soiled garments shall be provided.

d. Restowage On-Orbit - Garment stowage shall be designed to provide easy restorage of garments on-orbit.

e. Overnight Stowage - A closet-type stowage area for stowing garments overnight without having to fold or package them shall be provided.

11.13.2.3 Personal Ancillary Equipment Design Requirements

Where eyeglasses or sunglasses are a crew medical necessity, they shall be made of non-shattarable material.

All eyeglasses and sunglasses shall be equipped with straps or appropriate devices to assure positive retention on the user.

11.14.3 Cable Management Design Requirements

a. Routing - Cables shall be routed so that they:

1. Cannot be pinched by doors, lids, or slides.

2. Will not be used as a translation device in in a microgravity environment.

3. Will not be bent sharply when connected or disconnected.

4. Are accessible to the crewmember.

5. Do not infringe into the operational envelope nor constitute a safety hazard (i.e., sagging, hooking, etc.).

b. Cable Clamps - Long conductors, bundles, or cables, shall be secured by means of clamps unless they are contained in wiring ducts or cable retractors.

c. Identification - Cables shall be labeled to indicate the equipment to which they belong and the connectors with which they mate. All replaceable wires and cables shall be uniquely identified with distinct number or color codes in accordance with Paragraph 9.5.3, Labeling and Coding Design Requirements.

d. Location of Test, Experiment, or Other Cables - If it is essential that test, experiment, or other cables terminate on control or display panel junction boxes or a crewmember, the receptacles and cable routing shall be designed such that the cables will not interfere with controls, displays, or the crewmembers.

e. Coding - Cables containing individually insulated conductors with a common sheath shall be coded.

f. Protection - Guards or other protection shall be provided for easily damaged conductors such as waveguides, high-frequency cables, or insulated high-voltage cables.

g. Retention - The ends of cables which will be disconnected frequently shall have retention provisions.

NOTES

NOTES

12.3 DESIGN FOR MAINTAINABILITY DESIGN REQUIREMENTS

12.3.1 Equipment Design Requirements

12.3.1.1 General Maintainability Design Requirements

a. Growth and Update - Facilities, equipment, and software design shall allow reconfiguration and growth during the mission.

b. Independence - Systems and subsystems shall be as functionally, mechanically, electrically, and electronically independent as practical to facilitate maintenance.

c. Maintenance Support Services - Maintenance support services (e.g., electrical outlets) shall be accessible at potential problem locations or at a designated maintenance location.

d. Reliability - Equipment design shall reduce to a minimum the incidence of preventive and corrective maintenance.

e. Simplicity - Equipment design shall minimize maintenance complexity.

f. Time Requirements - Equipment design shall minimize the time requirements for maintenance.

g. Equipment - Maintenance equipment and tools shall be kept to a minimum.

h. Hazardous Conditions - System design shall preclude the introduction of hazardous conditions during maintenance procedures.

i. Critical Operations - Critical systems shall be capable of undergoing maintenance without the interruption of critical services and shall be maintained.

j. Non-Critical Operations - Non-critical systems shall be designed to operate in degraded modes while awaiting maintenance. Degraded mode operation shall not cause additional damage to the system or aggravate the original fault.

k. Redundancy Loss - Notification of loss of operational redundancy shall be provided immediately to the crew.

l. Connectors - Quick-disconnect connectors shall be used.

(Refer to Paragraph 11.10.3, Connector Design Requirements, for specific requirements.)

m. Plug-In Installation - Plug-in type hardware installation and mounting techniques shall be employed.

(Refer to Paragraph 11.5.3, Mounting Hardware Design Requirements, for specific requirements.)

n. Quick Release Fasteners - Quick release fasteners shall be used where consistent with other requirements (e.g., strength, sealing).

(Refer to Paragraph 11.9.3, Fastener Design Requirements, for specific requirements.)

o. Replacement Capabilities - Capacity of replaceable or reserviceable items (filters, screens, desiccant units, battery power supplies, etc.) shall be higher than the minimum functional requirements of the system.

p. Automation - Fault isolation, inspection, and checkout tasks shall be automated to the extent practical.

q. Restraints - Personnel and equipment mobility aids and restraints shall be provided to support maintenance.

(Refer to Paragraph 11.7.2.3, Personnel Restraints Design Requirements, and Paragraph 11.7.3.3, Equipment Restraints Design Requirements, for specific requirements.)

r. Special Skills - Maintenance requiring special skills shall be minimized.

s. EVA - Maintenance requiring EVA shall be minimized.

t. Soldering, Welding, and Brazing - Soldering, welding, brazing, and similar operations during maintenance shall be minimized.

12.3.1.2 Physical Accessibility Design Requirements

a. Relative Accessibility - Items most critical to system operation and which require rapid maintenance shall be most accessible. When relative criticality is not a factor, items requiring most frequent access shall be most accessible.

b. Access Dimensions - The minimum sizes for access openings for two hands, one hand, and fingers are shown in Figure 12.3.1.2-1.

c. Access - Access to inspect or replace an item (e.g., an *ORU*) shall not require removal of more than one access cover.

(Refer to Paragraph 11.4.3, Closures and Covers Design Requirements, for specific requirements.)

d. Mounted Components - When feasible, components shall be no more than one deep in a bay or rack.

(Refer to Paragraph 11.5.3.1, General Mounting Design Requirements, for specific requirements)

e. Environmental Control and Life Support Systems (ECLS) - Subsystem equipment supporting ECLS for safe IVA environment shall be accessible, removable, and repairable by an EVA suited crewmember.

f. Shape - Accesses shall be designed to the shape that will enable the crewmember to do his/her job and not be limited only to conventional shapes.

g. Number of Accesses - Whenever possible, one large access shall be provided rather than a number of small ones.

h. Protective Edges - Protective edges or fillets shall be provided on accesses that might injure crewmembers or their equipment.

(Refer to Paragraph 6.3.3, Mechanical Hazards, for specific requirements.)

i. Damage Inspection and Repair - Where feasible, the design of structures and equipment, including their interfaces and all portions of the pressure shell, bulkheads, and seals shall be accessible for damage inspection and repair. This shall apply to exterior as well as to interior surfaces.

(Refer to Paragraph 11.4.3, Closures and Covers Design Requirements, for specific equipment accessibility requirements.)

j. Use of Tools and Test Equipment - Check points, adjustment points, test points, cables, connectors, and labels shall be accessible and visible during maintenance.

Sufficient space shall be provided for the use of test equipment and other required tools without difficulty or hazard.

(Refer to Paragraph 11.2.3, Tool Design Requirements, for specific requirements.)

Minimal Two-Hand Access Openings Without Visual Access

Reaching with both hands to depth of 150mm (6.0 in) to 490 mm (19.25 in)

Light clothing	Width:	200 mm (8.0 in) or the depth of reach
	Height:	125 mm (5.0 in.)

Reaching full arm's length (to shoulders) with both arms (light clothing)

Width:	500 mm (19.5 in)
Height:	125 mm (5.0 in)

Inserting box grasped by handles on the front:

13 mm (0.5 in) clearance around box, assuming adequate clearance around handles

Inserting box with hands on the sides:

Light clothing:	Width:	Box plus 115 mm (4.5 in)
	‡ Height:	125 mm (5.0 in) or 13 mm (0.5 in) around box *

* Whichever is larger
‡ If hands curl around bottom, allow an extra 38 mm (1.5 in.) for light clothing

Minimal One-Hand Access Openings Without Visual Access

	Height	Width
Empty hand, to wrist:		
Bare hand, rolled	95 mm (3.75 in) sq or dia	
Bare hand, flat	55 mm (2.25 in) x 100 mm (4 in) or 100 mm (4 in) dia	
Clenched hand, to wrist:		
Bare hand:	95 mm (3.75 in) x 125 mm (5.0 in) or 125 mm (5.0 in) dia	
Arm to elbow:		
Light clothing:	100 mm (4.0 in) x 115 mm (4.5 in)	
Arm to shoulder:		
Light clothing:	125 mm (5.0 in) sq or dia	

Minimal Finger Access to First Joint

Push button access:	Bare hand:	32 mm dia (1.26 in)
	Thermal gloved hand:	38 mm dia (1.5 in)
Two finger twist access:	Bare hand:	object plus 50 mm (1.97 in)
	Thermal gloved hand:	object plus 65 mm (2.56 in)

Figure 12.3.1.2-1 Minimum Sizes for Access Openings for Two Hands, One Hand, and Fingers

MSIS 297

k. Service Points for Fluid Systems - Service points for filling, draining, and purging or bleeding shall be in accessible locations.

(Refer to Paragraph 11.10.3.1, Fluid and Gas Connectors Design Requirements, for specific requirements.)

l. Plug Connectors - Full access shall be provided to plug connectors.

(Refer to Paragraph 11.10.3, Connector Design Requirements, for specific requirements.)

m. Cables :

1. Cable access - Cables shall be routed so as to be readily accessible for inspection and repair.

2. Cable trays - Wire harness and fluid lines mounted in cable trays shall be located for ready access.

3. Cable loops - Panel, console, and rack-mounted components shall have slack cable lengths or maintenance loops sufficient for removal of the connectors after the component has been extracted from its installed location, unless adequate internal access (physical and visual) is provided.

4. Cable Routing - Cables shall not be routed external to the face of the equipment rack.

(Refer to Paragraph 11.14.3, Cable Management Design Requirements, for specific requirements.)

n. Fuses and Circuit Breakers - Fuses and circuit breakers shall be readily accessible for removal, replacement and resetting. The condition of fuses (good or blown) shall be readily discernable without having to remove the fuse.

o. Structural Members - Structural components of units or chassis shall not prevent access to or removal of equipment.

p. Fold-Out/Pull Out Drawers and Cabinets - Fold-Out/pull-out drawers and cabinets shall be used where possible to provide ease of access.

(Refer to Paragraph 11.3.3, Draw and Rack Design Requirements, for requirements for the design of sliding, rotating, and hinged equipment for maintenance related access.)

q. Slide-Out Stops - Limit stops shall be provided on racks and drawers which are required to be pulled out of their installed positions for maintenance. The limit stop design shall permit convenient overriding of stops for unit removal.

r. Hazardous Conditions - If a hazardous condition exists behind an access, a safety indicator shall be provided. The access shall be equipped with an interlock that will de-energize the hazardous condition when the barrier is opened or removed, and a manual override capability shall be provided.

(Refer to Paragraph 6.4.3, Electrical Hazards Design Requirements, for specific safety requirements.)

(Refer to Paragraph 9.4.4.3, Caution and Warning System Design Requirements, for related requirements.)

s. Covers - Where physical access is required, one of the following practices shall be followed, with the order of preference as given.

(Refer to Paragraph 11.4.3, Closures and Covers Design Requirements, for design requirements relating to maintainability.)

1. Provide a sliding or hinged cap or door where debris, moisture, or other foreign materials might otherwise create a problem.

2. Provide a quick-opening cover plate in a cap that will meet stress requirements.

t. Self-Supporting Covers - All access covers that are not completely removable shall be self-supporting in the open position.

u. Rear Access - Sliding, rotating, or hinged equipment to which rear access is required shall be free to open or rotate its full distance.

12.3.1.3 Visual Access Design Requirements

a. Visual Access - Where visual access only is required, the following practices shall be followed with the order of preference as given.

1. Provide an opening with no cover except where this might degrade system performance.

2. Provide a transparent window if dirt, moisture, or other foreign materials might create a problem.

3. Provide a quick-opening metal cover if a transparent cover will not meet stress or other requirements.

b. Visual and Manual Access - If the crewmember has to be able to see the task, design of the access shall be large enough to allow simultaneous visual as well as physical access; otherwise a separate window shall be provided for visual access to monitor task performance. (Refer to Paragraph 12.3.1.2, Physical Accessibility Design Requirements, for additional requirements.)

c. Labeling:

(Refer to Paragraph 9.5, Labeling and Coding, and Paragraph 9.4.4, Caution and Warning Displays, for related requirements.)

1. Access labeling - Each equipment access shall be labeled to indicate items visible or accessible through it.

2. Visibility - Relevant labels and mounting instructions shall be visible during all maintenance activities.

3. Identification labels - Each access shall be labeled with a number, letter, or other symbol which is directly cross-referenced to the maintenance procedures.

4. Plug configuration labels - When a plug-in device has to be inserted through a hole with limited visual access, a label adjacent to the access shall indicate how the pins on the device will align with the holes in the socket.

5. Component identification labels - Electrical cables, fluid lines, and other subsystem protective shields shall be labeled or otherwise coded to allow for positive identification.

6. Hazard labels - Accesses shall be labeled with appropriate hazard labels, advising of any hazard existing beyond the access and stating necessary precautions.

7. Hinged cover labels - If instructions applying to a covered item are lettered on a hinged door, the lettering shall be oriented to be read by the crewmember performing maintenance when the door is opened.

(Refer to Paragraph 9.5.3, Labeling and Coding Design Requirements, for additional requirements.)

d. Fluid and Gas Line Connectors - Where feasible, fluid and gas connectors shall be located and configured so they can be inspected, and so that any leakage is obvious.

(Refer to Paragraph 11.10, Connector Design Requirements, for other connector requirements.)

12.3.1.4 Removal, Replacement and Modularity Design Requirements

(Refer to Paragraph 11.5.3.2, Alignment Devices Design Requirements, and Paragraph 11.5.3.1, General Mounting Design Requirements, for additional requirements.)

a. Removal - Systems and subsystems shall be designed so that failed *Orbital Replacement Units (ORU's)* can be removed without damaging or disturbing other components.

b. Surface Removal - Replaceable units shall be designed for removal through the surface facing the crewmember as he works on the equipment.

(Refer to Paragraph 11.5.3.1, General Mounting Requirements, for other specific requirements)

c. Independence - Where feasible, it shall not be necessary to remove or disable an operable unit to obtain access to a defective replaceable unit.

d. Component Labeling - Each removable component and its position on the unit shall be labeled with corresponding numbers or other identification.

(Refer to Paragraph 9.5.3, Labeling and Coding Design Requirements, for specific requirements.)

e. Isolation Valves - Subsystems that contain liquids or high pressure gases (pressures exceeding 125 psia) and require maintenance shall be provided with isolation or disconnect valves to permit isolation and servicing and to aid in leak detection.

f. Spillage control - Replaceable units shall be designed to control spillage and the release of gases during removal or replacement.

g. Energized Units - Replaceable units and payloads which supply or receive energy shall be designed so that the power can be removed before repair, removal, or replacement is attempted. If stored energy can pose a hazard, provisions shall be made for its dissipation prior to maintenance.

(Refer to Paragraph 5.4.3, Electrical Hazards Design Requirements, for specific requirements.)

h. Fastener Coatings - Paint and/or coatings shall not adversely affect removal or installation of fasteners.

i. Short Life Components - Easy replacement shall be provided for components that fail frequently (e.g., lamps and fuses).

j. Guide Pins - For mounting and replacement of replaceable units, guides and guide pins shall be provided for alignment.

k. Replacement Specificity - All replaceable items shall be designed so that it will be physically impossible to insert the unit incorrectly.

l. Related Items - Items of the same or similar form which have different functional properties shall be readily identifiable and distinguishable, and shall not be physically interchangeable. This indication shall be readily discernable with the component in its installed position.

12.3.2 Testability Design Requirements

12.3.2.1 Fault Detection and Isolation Design Requirements

(Refer to Paragraph 9.4.4.3, Caution and Warning Display Design Requirements, Paragraph 9.4.2.3, Visual Displays Design Requirements, and Paragraph 9.3.3, Control Design Requirements, for specific requirements.)

a. General - Equipment design shall facilitate rapid and positive fault detection and isolation of defective items.

b. Checkout - On-board fault detection/isolation shall be automated and pre-programmed for mission-critical and/or life support systems. On-demand system checkout shall also be available.

c. Diagnostic Capability - Equipment shall have an integrated diagnostic capability for all functional failures identified as known or expected to occur, in mission-critical and life support systems.

d. Replacement Unit Status - When feasible, Replacement Unit design and configuration shall permit verification of operational status prior to installation without the need for disassembly.

e. Sensors - The status of sensors on replacement units shall be verifiable with respect to accuracy and proper operation.

f. Manual Override - A manual override capability for all automatic control functions shall be provided.

g. Portable Equipment - When built-in test equipment is not available, diagnostic tools and/or portable equipment shall be provided for fault isolation to the replacement unit level.

h. Critical Malfunction Alarm - If critical equipment is not regularly monitored an alarm (auditory, visual, or both) shall be designed to ensure detection.

i. Power Failure Indication - An indication shall be provided to reveal power failures.

j. Power Interrupt - A positive indication of an open circuit shall be provided by a fuse or circuit breaker.

k. Out of Tolerance - A positive indication shall be provided when equipment has failed or is not operating within tolerance limits.

l. Trouble-shooting Sequence - A sequence of trouble-shooting checks shall be specified to maximize trouble-shooting efficiency.

m. Test Equipment Verification - All electronic test equipment shall have built-in test capability.

n. Test Equipment Accuracy - The accuracy of all test equipment shall exceed that of the equipment being tested.

o. Adjustment Controls - Appropriate feedback shall be provided for all adjustment controls and shall be readily discernible to the person making the adjustment while making the adjustment. Adjustment controls shall be reversible without dead band, slop, hysteresis, or striction as reversal.

p. Calibration Damage - Calibration or adjustment controls shall be provided with appropriate stops to prevent damage to the system. Calibration controls shall provide an indication (visual or audible) when stops are reached.

12.3.2.2 Test Point Design Requirements

(Refer to Paragraph 9.2.3.2, C/D Placement and Integration - Design Requirements, Paragraph 9.4.4.3, Caution and Warning Design Requirements, and Paragraph 9.5.3, Labeling and Coding Design Requirements, for additional requirements.)

a. Self-Checking - Appropriate test points shall be provided where a unit is not completely self-checking.

b. Proximity - Test points shall be provided at or near maintenance locations.

c. Adjustment - Test points used in adjusting a unit shall be in physical and visual proximity of the controls and displays used in the instrument.

d. Labeling - Each test point shall be clearly labeled with a description of its function, or, at a minimum, with a code number keyed to the maintenance manual.

e. Warning Labels - Test points shall be marked with appropriate warning labels when the application of conventional test probes could cause damage to internal circuits (e.g., integrated circuits) or injury to personnel.

f. Troubleshooting - Sufficient test points shall be provided so that it will not be necessary to remove sub-assemblies to accomplish troubleshooting/fault diagnosis.

g. Test Cable Termination - If it is essential that test cables terminate on control and display panels, the panel test receptacles shall be located so that the test cables will not interfere with controls and displays.

h. Layout - Primary test points shall be grouped in a line or matrix that reflects the sequence of tests to be performed.

i. Grouping - A control panel or a series of functionally autonomous panels shall be used to group test points whenever possible.

j. Testing and Servicing - Rear plug connectors shall be accessible for testing and servicing except where precluded by potting, sealing, or other requirements.

12.3.3 Maintenance Information Mgmt. Systems Design Requirements

(Refer to Paragraph 13.4.3, Information Management Design Requirements, for other specific requirements.)

a. System Capabilities - As a minimum, the on-board information systems shall provide command and status indications to/from all subsystems for the purpose of system maintenance and trouble-shooting procedures, trend data acquisition and analysis, status of consumables, fault detection/isolation, scheduled maintenance data, repair/replacement information, and replacement unit maintenance history and maintenance checklists.

b. Recording and Retrieval - The system shall provide for the recording and retrieving of maintenance information in near real-time.

c. Fail Operational Systems - All systems that incorporate an automated fail-operational capability shall be designed to provide crew notification and data management system cognizance of malfunctions until the faults have been corrected.

d. Replacement Unit Characteristics - A characteristic matrix of all replacement units shall be included in the data base containing replacement unit ID number, bite (replacement units containing built-in-test-equipment), hazardous system factors, critical system status, availability, and shelf-life limits, serial number traceable to manufacturer, batch data, date of manufacture, and storage constraints.

e. Sparing Status - Replacement unit sparing status shall be provided to ensure that procedures and on-board repair materials are adequate for each mission.

f. Spares Inventory - Th automated information management system shall contain an on-orbit spares inventory to identify the numbers and locations of replacement units stowed in the space module.

(Refer to Paragraph 13.3.3, Inventory Management Design Requirements, for specific requirements.)

NOTES

NOTES

13.2.3 Housekeeping Design Requirements

13.2.3.1 General Housekeeping Design Requirements

a. Contamination Control During Ground Handling - The greatest practicable precautions shall be taken to ensure freedom from debris and surface contamination within the space module and individual systems and components during the ground operations from manufacture to launch.

b. Surface Materials - Materials used for exposed interior surfaces shall be selected to minimize particulate and microbial contamination and be easy to clean (i.e., shall be smooth, solid, nonporous).

c. Grids and Uneven Surfaces - Grids and uneven surfaces shall either not be used or they shall be easy to remove and easy to clean.

d. Cracks and Crevices - All interior structural surfaces and equipment shall be free of narrow openings and crevices that can collect liquid or particulate matter or that require a special tool for cleaning.

e. Closures - Closures shall be provided for any area that cannot be easily cleaned.

   (Refer to Paragraph 11.4, Closures, for specific design considerations and requirements.)

f. Fluid and Debris Collection/Containment - Means shall be provided for collecting and/or containing any loose fluids or debris that may result from operational use, component replacement, maintenance, service or repair.

g. Built-in Control - Any subsystem which routinely utilizes containers of liquids or particulate matter shall have built-in equipment/methods for capture or prevention of vaporization into the atmosphere, prevention of material overflow from use, and methods of decontamination of spills.

   1. The capture elements shall be easily accessed for replacement or cleaning without risk of dispersion of the trapped materials.

   2. Grid, screen, or filter surfaces shall be directly accessible for cleaning

      (Refer to Paragraph 13.2.3.4 Air Filter Design Requirements, for filter requirements.)

h. Transfer Containers - Transfer containers, if required, shall be so constructed as to prevent contamination during transfer and disposal.

13.2.3.2 Surface Cleaning Design Requirements

a. Bacteria Sampling/Biocide Selection - Means shall be provided for taking microbial samples from all types of surfaces and for identifying an appropriate biocide.

b. Cleaning Chemicals - Cleaning chemicals shall meet the following requirements:

   1. Shall be low sudsing.

   2. Shall be safe for use in an enclosed environment.

   3. Shall be compatible with onboard water reclamation and/or waste disposal systems.

   4. Shall not stain or discolor the surface being cleaned.

   5. Shall be in an easy-to-use, controllable content container.

   6. Shall not produce a foul, unpleasant, lingering odor.

c. Illumination - Adequate illumination for visual inspection and cleaning of both internal and external housekeeping features.

(Refer to Paragraph 8.13.3, Lighting Design Requirements, for specific illumination requirements.)

d. Wipes - The following types of wipes for use in general housekeeping and personal hygiene shall be provided:

1. Dry wipes - Utility tissue used as toilet tissue and for compartment and equipment cleaning.

2. Wet wipes - Evaporative detergent-saturated tissues used for personal hygiene and eating utensil cleanup.

3. Biocide wipes - Biocide-saturated pads used for disinfecting food spills, waste management systems, etc.

4. Reusable wipes - Utility handwipes that can be impregnated or dampened with premixed evaporative detergent/biocidal solutions or with water.

e. Cleaning Implements - Provide means for dislodging and collecting dirt and debris from surfaces, cracks, and crevices.

f. One-Handed Operation - Cleaning equipment and supplies shall be designed for one-handed operation or use.

g. Housekeeping Cleansing Agents - A non-biocidal cleansing agent or agents, shall be provided for general purpose surface cleansing in which specific biological control is not required. A biocidal cleansing agent or agents shall be provided for clean-up of biological spills and biologically contaminated surfaces.

h. Biofilm Control - Means shall be provided to control the formation and growth of biofilm on the inside surfaces of all fluid lines and pipes so as not to degrade the mission.

13.2.3.3 Vacuum Cleaning Design Requirements

a. Suction - The system shall provide adequate suction capability for the collection and retention of both wet and dry particulate matter and of liquids.

b. Noise Level - The system shall have noise levels compatible with Paragraph 5.4.3.2.

c. Attachments - The system shall provide an assortment of attachments which conform to the various surfaces that need to be cleaned (e.g., flat surfaces, filters, cracks, crevices, corners, etc.)

d. Disposable Bags - The system shall provide disposable bags:

1. Suitable for containing both dry and liquid wastes.

2. Compactible for compaction in a trash compactor

3. Designed for long life, i.e., minimize frequency of replacement.

e. Lighting - The system shall provide lighting to illuminate the area to be cleaned.

f. Nonpropulsive - Propulsive characteristics and self-generated torques of the system shall be compensated for in the design.

13.2.3.4 Air Filter Design Requirements

a. Access - Air filters (grids, screens, filter surfaces) shall be readily accessible for cleaning and replacement without disturbance of collected material.

b. Configuration - Nondisposable air filters shall be configured to allow them to be cleaned by a vacuum cleaner attachment.

   (Refer to Paragraph 13.2.3.1, General Housekeeping Design Requirements, item g, for other filter design requirements.)

c. Filter Condition - The design of the air filter shall incorporate the means to inform the crew of the overall condition of the filter (e.g., visual feedback, ΔP sensor).

13.3.3 Inventory Control Design Requirements

13.3.3.1 General Inventory Control Design Requirements

a. Ground Compatibility - the onboard and ground inventory data formats shall be identical.

b. Telemetry - The inventory management system shall interface with the telemetry system for realtime uplink and downlink.

c. Automatic Updating - The system shall provide the capability to automatically revise the inventory control database and other data references affected by stowage/ inventory changes.

d. Standard Procedures - The system shall provide a user/computer procedural interface that is standardized with other data management functions.

   (Refer to Paragraph 9.6.3, User/Computer Interaction Design Requirements, for specific design requirements for the user/computer interface.)

e. Standard Nomenclature - The nomenclature used to refer to the items tracked by the inventory management system shall be identical to, and standardized with, that used on design drawings, training hardware, checklists, and procedures, labels, etc.

f. Cross Indexing - The information in the database shall be indexed with many cross reference categories to facilitate ease of data retrieval.

g. Minimize Inventory Control Crew Time - The inventory control system shall be designed to minimize the amount of crew time required for the inventory control functions. A design goal shall be that the inventory control function shall require no direct crew input, but rather shall automatically track items and update the database.

13.3.3.2 Inventory Control Reports Requirements

a. Item Status - Display the location(s) for an item that is selected by item number or item name. This report shall include the quantity of the item at each location.

b. Transfer Status - For an item selected by name or by number or for all items, provide a report that displays the "From Location", the "To Location", and the quantity to be transferred.

c. Location Status - Display items (by item number and item name) stowed in a specified stowage location. Quantity of each item in the specified location shall also be provided.

d. Limit Warning Report - Provide an alert message that indicates when quantities of consumables, or items, fall below a predetermined safe limit.

13.4.3 Information Management Design Requirements

13.4.3.1 General Information Management Design Requirements

a. Minimum Onboard Information - At a minimum the following information shall be accessible onboard:

   1. System Maintenance and Troubleshooting Procedures

   2. Trend data Acquisition and Analysis

   3. Consumable Status

   4. Payload Data Collection

   5. Experiment Procedures

   6. Repair and Replacement Information

   7. Medical History

   8. Inventory Control Data

      (Refer to Paragraph 13.3.3, Inventory Control Design Requirements.)

b. Information Management Facilities - Information management facilities shall be provided in the spacecraft for stowing, receiving, displaying, processing, and updating mission data.

c. Information Display Orientation - The information display provisions shall allow orientation of the data to the optimum position for use while performing the mission tasks that use the information.

d. Hands Free Use of Information - The information display provisions shall leave the crewmember's hands free once the data has been positioned.

e. Data File Organization - Means shall be provided to stow mission data in organized, segmented data files in which individual data records can be readily obtained.

f. Flight Data Hardcopy - As a minimum, hardcopy file data shall be maintained on board for all procedures for emergency operations of the spacecraft, continued crew safety, rescue, or escape.

13.4.3.2 Hardcopy Information Management Design Requirements

a. Restraints :

   1. Equipment restraints - Means shall be provided for restraining documents, loose sheets of paper, writing implements, and supplies required for documentation update (tape, scissors, etc.) at each information management workstation.

      (Refer to Paragraph 11.7.3, Equipment Restraints Design Requirements, for specific requirements.)

   2. Personnel restraints - Means shall be provided to restrain the crewmembers at the various workstations in a manner that leaves both hands free for documentation update and recording.

      (Refer to Paragraph 9.2.4.2.3, Workstation Restraints and Mobility Aids Design Requirements, for specific requirements.)

   3. Document restraints - Means shall be provided to hold documents open to specific pages.

b. Writing/Working Surface - Fixed and portable writing/working surfaces shall be provided.

c. Writing Instruments and Supplies - Writing instruments and supplies required for documentation update (e.g., scissors and tape) shall be provided.

d. Stowage of Writing Instruments, Supplies, and Documents - Consolidated stowage shall be provided for writing instruments, supplies, and documents in locations that are accessible to a restrained crewmember.

   (Refer to Paragraph 10.12.3, Stowage Facility Design Requirements, for specific requirements.)

e. Illumination - Adequate illumination shall be provided for each workstation where hand documentation normally will be prepared.

(Refer to Paragraph 8.13.3, Lighting Design Requirements.)

f. Onboard Printer/Copier - Capability for onboard preparation and duplication of hardcopy documentation shall be provided.

13.4.3.3 Electronic Information Management Design Requirements

NOTES

NOTES

14.1.3 General EVA Safety Design Requirements

(Refer to Section 6.0, Crew Safety, for additional safety requirements that pertain to EVA. In the event of conflict concerning EVA safety issues, Section 14.0 shall take precedence.)

a. Temperatures - Surface temperatures of space module components requiring EVA interface shall be compatible with the touch-temperature limits of the pressure suit design being used.

b. Radiation - The EVA system design and operational procedures shall protect the EVA crewmember from radiation for the duration of the EVA exposure during the mission.

c. Micrometeoroids and Debris - EVA system design shall protect the EVA crewmember from expected particles including sand and dust.

d. Chemical Contamination - The EVA system shall protect the crewmember from hazardous chemical contamination.

e. Edges and Protrusions - All space module equipment and structures requiring an EVA interface must either be designed to preclude sharp edges or protrusions, or must be covered to protect the crewmember and the crewmember's critical support equipment.

f. Hazardous Equipment - Potentially hazardous items that could injure EVA crewmembers or damage EVA equipment by entrapment, snagging, tearing, puncturing, cutting, burning, or abrading shall be designed to ensure elimination of, or protection from, the hazard.

g. Ingress/Egress - EVA crewmembers shall always have a positive method and means to return to the pressurized module.

h. Power Sources - Special shielding and/or procedures shall be provided to preclude EVA approaches to a nuclear rector or radioisotopic generator power source located in the space module, that may result in additional radiation exposure.

i. Transmitters - Procedures shall be developed to protect crewmembers during EVA approaches that may result in harmful exposures to the non-ionizing radiation being emitted from all high-power electromagnetic EM wave transmitters (microwave, radar, laser, radio, UV/IR visible lamps) on or in the space module with exterior antennas or external apertures.

j. Tethers - EVA crewmembers shall be safety tethered to the space module at all times in microgravity, unless they are in a free-flying maneuvering unit or otherwise suitably restrained.

   (Refer to Paragraph 14.4, EVA Workstations and Restraints, and Paragraph 11.7.2, Personnel Restraints, for other restraint design considerations and requirements).

k. Ignition Sources - Electrical current limiting devices shall be provided to eliminate all potential ignition sources within any oxygen-enriched atmosphere of the life support system and pressure suit.

l. Positive Pressure - Protection shall be provided to prevent rupture by overpressurization of the crewmember's pressure envelop due to failure of the pressure supply system.

m. Electrical Voltage - The EVA crewmember shall be protected against electric voltage shocks from inadvertent grounding of electric circuits and from electrical discharge resulting from static charge build-up.

14.2.3 EVA Physiological Design Requirements

14.2.3.4 EVA Strength-Related Design Requirements

Design forces required for operation of hardware shall not exceed the capabilities of the potential population of EVA crewmembers within a given pressure suit design.

(Refer to Paragraph 4.9.3, Strength Design Requirements, for requirements that pertain to nude-body strength in one-g.)

14.2.3.5 EVA Metabolic Workload Design Requirements

The EMU shall be able to support a mean metabolic rate of 250 kcal/hr (1000 Btu/hr) for the total EVA duration x 400 kcal/hr (1600 Btu/hr) for 60 minutes, and a sustained minimum level of 65 kcal/hr (250 Btu/1 hr).

14.2.3.6 EVA Food and Drinking Water Design Requirements

a. Water Requirements - Water shall be available during EVA at a rate 240 cc/hr (8 oz/hr) for EVAs over 3 hours.

b. Food Requirements are as follows:

   1. EVAs of 4 hours or less in duration may be managed with 200 KCAL (795 Btu) of food.

   2. EVAs of greater than 4 hours in duration and at least 48 hours apart may be managed with 200 kcal (795 Btu) of food.

   3. Single or multiple EVAs of 4 to 8 hours in aggregate and repeated at intervals less than 48 hours apart may be managed with 750 kcal (2975 Btu) of food.

c. Materials used shall meet the current FDA requirements that pertain to food and drinking water.

   (Refer to Paragraph 7.2.2.3, Nutrition Design Requirements for data relative to potable water compatibility.)

14.2.3.7 EVA Body Waste Management Design Requirements

a. Body Wastes to be Accommodated - accommodation of 1000 cc (33 oz) of urine for men and women, and menses for women.

b. Contamination Protection - prevention of odor, particles, biotic contaminants, and/or toxicants.

c. Duration of Accommodation - accommodation of body wastes for maximum suited duration.

d. Oral/Nasal Breathing Environment - Space suit systems in combination with EVA procedures shall provide for an in-helmet environment that provides protection from defecation in the suit, vomiting in the suit, loose food or waste particles, and free-floating liquids.

   (Refer to Paragraph 10.3.3, Body Waste Management Facilities Design Requirements, for other information that pertains to body waste management.)

14.2.3.8 EVA Medical Monitoring Design Requirements

a. Detection Capability - the capability to detect physiological stress and/or excess during EVA.

b. Mobility - minimally interfere with personnel mobility.

c. Checkout Time - require minimum checkout time.

d. Communications, Caution, and Warning - the capability for real-time downlink, as well as in-suit caution and warning alarms , and the provision of caution and warning alarms for intravehicular crewmember support.

(Refer to Paragraph 9.4.4.3, Caution and Warning System Design Requirements, for specific requirements.)

e. Monitor Parameters - parameters that shall be monitored include O_2 consumption, heart rate and EKG signal, suit pressure, in-suit partial pressure (for active two-gas life support system designs), CO_2 partial pressure, and a physiological monitoring capability shall be provided for each EVA crewmember to measure radiation exposure in the suit either actively or passively depending on the radiation environment.

(Refer to Paragraph 5.7.2.2.3, Ionizing Radiation Monitoring and Dosimetry Design Requirements, and Paragraph 5.7.2.2.4, Ionizing Radiation Personnel Protective Equipment Design Requirements, for other applicable requirements. Refer to Paragraph 6.4.3, Electrical Hazards Design Requirements, and Paragraph 10.9.3, Health Maintenance Facilities, for information that pertains to EVA medical monitoring.)

14.2.3.9 EVA Suit Pressure Design Requirements

a. O_2 Pressure - The O_2 pressure in the space suit shall be maintained above the minimum normoxic levels shown in Figure 14.2.3.9-1.

b. O_2 Partial Pressure Exposure - Exposure to O_2 partial pressure during EVA preparation and during EVA shall be limited as a function of time due to O_2 toxicity concern as shown in Figure 14.2.3.9-2.

c. High O_2 Partial Pressure Exposure - Chronic (>6 hrs) exposure to O_2 partial pressure above 310 mmHg (6.0 psi) will require crew health assessment with pulmonary function tests and laboratory tests.

d. CO_2 Partial Pressure Exposure - The inspired CO_2 (CO_2 in the gas stream directed to the helmet plus the CO_2 rebreathed from respiration) shall not exceed 7.6 mmHg (0.15 psi) at metabolic rates up to 400 kcal/hr (1600 Btw/hr). The inspired CO_2 shall not exceed 10 mmHg (0.19 psi) for periods up to 15 minutes at metabolic rates up to 500 kcal (2000 Btu/hr), and shall not exceed 15 mmHg (0.29 psi) for periods of 5 minutes at metabolic rates up to 630 kcal/hr (2500 Btu/hr).

e. Rate of Pressure Change - The rate of pressure change experienced by the crewmember during either normal depressurization or repressurization shall not exceed 2.6 mmHg/second (0.05 psi/second).

f. Rate of Emergency Repressurization - The rate of emergency repressurization shall not exceed 52 mmHg/second (1.0 psi/second) and shall not result in a crewmember peak differential pressure across the chest in excess of 80mmHg (1.5 psi) or 40 mmHg (0.77 psi) for a period longer than 5 seconds.

14.2.3.10 EVA Radiation Dosage Design Requirements

(Refer to Paragraph 5.7.2.2, Ionizing Radiation Design Requirements, and Paragraph 5.7.3.2, Non-Ionizing Radiation Design Requirements, for other radiation dosage design requirements.)

a. Radiation Protection - Sufficient protection to keep radiation exposure below permissable EVA limits based on the maximum predicted radiation levels and the maxium expected task durations.

b. EVA Radiation Exposure Limits - based on NASA exposure limits:

1. Mission exposure limits shall be set.

Total pressure		Normoxic O_2 pressure	
Kpascal	(psi)	kPa	(psi)
25.51	3.70	25.51	3.70
27.58	4.00	24.96	3.62
34.47	5.00	23.79	3.45
41.37	6.00	23.17	3.36
48.26	7.00	22.68	3.29
55.16	8.00	22.34	3.24
62.05	9.00	22.06	3.20
68.95	10.00	21.86	3.17
101.35	14.70	21.24	3.08

Figure 14.2.3.9-1 Normoxic O_2 Pressure as a Function of Total Pressure

MSIS 299

O_2 partial pressure		Limitations
Range		Hours per period
Kpascal	(psi)	
69 - 101	(10 - 14.7)	6 hours/ 24 hour period 18 hours/120 hour period
41 - 69	(6 - 10.0)	18 hours/120 hour period
21 - 41	(3 - 6.0)	None

Figure 14.2.3.9-2 Exposure Limits to Partial Pressures During EVA Preparation

MSIS 300

2. Based on the mission exposure and the radiation dose acquired during IVA, permissible EVA radiation exposure limits shall be set.

c. Non-ionizing Radiation Standards:

1. Using terrestial exposure standards for non-ionizing radiation as a basis, exposure standards for non-ionizing radiation shall be established.

2. These standards shall be applied to protect EVA crewmembers from possible contact with high levels of non-ionizing radiation being emitted by exterior antennas or aperatures.

d. UV Eye Protection - the design of the space suit helmet and visors shall provide adequate eye protection to the EVA crewmember from the Sun's direct and reflected UV radiation for the duration of EVA exposure.

14.2.3.11 EVA Touch Temperature and Pressure Design Requirements

a. EVA Space Suit - The Space Station Extra-Vehicular Mobility Unit (SSEMU) shall maintain space suit internal surface temperatures between 10° C (50°F) and 43°C(110°F).

b. EVA Glove - The EVA glove shall provide the above protection during and subsequent to the period that the external surface of the glove is loaded to 52 mmHg (1-Opsi) for 0.5 minute by an object with a surface temperature between -120°C (-185°F) and 113°C (+235°F).

(Refer to Paragraph 6.5.3, Touch Temperature Design Requirements, for other specific requirements.)

14.3.4 EVA Anthropometry Design Requirements

(Refer to Figures 14.3.4.3-1, 14.3.4.3-2, 14.3.4.4-1, 14.3.4.4-2, for example EVA anthropometric design solutions.)

14.4.3 EVA Workstation and Restraint Design Requirements

(Refer to Paragraph 9.2.3, Control/Display Placement and Integration, for other requirements that may pertain to controls and displays).

14.4.3.1 EVA Work Envelope Design Requirements

EVA workstations shall be designed based on the reach envelopes, field-of-view, and neutral body posture of the space suited crewmember defined in Paragraph 14.3.2.2.

(Refer to Paragraph 9.2.4.2, Human/Workstation Configuration Design Requirements, and Paragraph 8.6.3, Crewstation Body Envelopes Design Requirements, for other requirements that pertain to envelope geometry.)

14.4.3.2 EVA Control and Display Design Requirements

a. Controls - EVA control type, location, and actuation forces shall conform to the EVA requirements in Paragraph 9.2, Workstation Layout, and Paragraph 9.3, Controls, with the following additions and exceptions to those requirements:

1. Glove Interface - All controls with the potential to be operated by an EVA crewmember shall be operable by a crewmember wearing a pressurized EVA space suit glove.

2. Switches - Guarded switches shall be employed where possible. Switches shall provide tactile and/or visual feedback of position.

Item	Range	Torque
Shoulder mobility		
Adduction/abduction	2.62 rad (150 deg)	13.6 Nm (12 in-lbs)
Lateral/medial	0.35/2.62 rad (20 deg/150 deg)	1.36 Nm (12 in-lbs)
Flexion/extension	3.14 rad (180 deg)	4.52 Nm (40 in-lbs)
Rotation (x-z plane)	1.57 rad (90 deg)	3.39 Nm (30 in-lbs)
Rotation (y-z plane) (lateral-medial)	2.09 rad (120 deg)	3.39 Nm (30 in-lbs)
Elbow mobility		
Flexion/extension	2.27 rad (130 deg)	1.36 Nm (12 in-lbs)
Wrist mobility		
Flexion/extension	1.57 rad (90 deg)	0.68 Nm (6 in-lbs)
Abduction/adduction	2.09 rad (120 deg)	0.68 Nm (6 in-lbs)
Waist mobility		
Flexion/extension (hip and waist)	1.57 rad (90 deg)	5.42 Nm (48 i.-lbs)
Rotation	2.62 rad (150 deg)	12.43 Nm (110 in-lbs)
Hip mobility		
Flexion	1.22 rad (70 deg)	2.71 Nm (24 in-lbs)
Abduction	0.17 rad (10 deg)	2.71 Nm (24 in-lbs)
Knee mobility		
Flexion (standing)	2.09 rad (120 deg)	1.36 Nm (12 in-lbs)
Flexion (kneeling)	2.62 rad (150 deg)	1.36 Nm (12 in-lbs)
Ankle mobility		
Flexion/extension	0.70/0.70 rad (40 deg/40 deg)	1.36 Nm (12 in-lbs)
Forearm mobility		
Wrist rotation	31.4 rad (180 deg)	0.68 Nm (6 in-lbs)
Glove mobility		
Finger flexion/extension	Grasping a one-inch diameter rod for 5 minutes	—

Figure 14.3.4.3-1 STS Space Suit Joint Mobility and Torque Specifications at 4.3 psig

MSIS 310

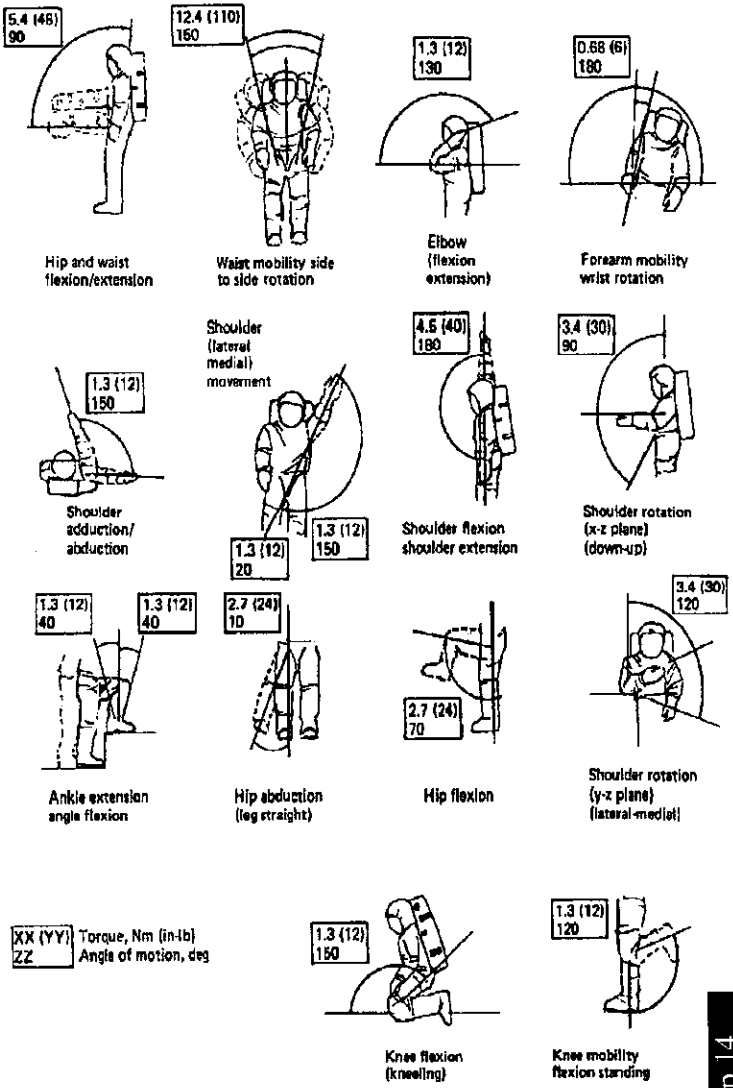

Chap 14

Note:
The angles illustrated and those listed do not always coincide

Figure 14.3.4.3-2 STS Space Suit Joint Mobility Range Specifications for 4.3 psig

MSIS 311

System provision	Parameter	Performance		
Helmet and EVVA optical visibility	Field of vision	120 deg, left and right in the horizontal plane. 105 deg. down and 90 deg. up in the vertical plane		
	Critical area of vision	Vertical		90 deg 1.57 rad
		Superior-temporal		62 deg 1.08 rad
		Superior		85 deg 1.48 rad
		Inferior-temporal		85 deg 1.48 rad
		Inferior		70 deg 1.22 rad
Optical distortion		No visible distortion or optical defects detectable by the unaided eye. (20/20 visual acuity) at the typical "as worn" position		
		UV	Luminous	IR
Transmittance	Nanometers (nm)	200-300	400-700	700+
Thermal/coating optical characteristics				
	Characteristics	Inner protective visor		Outer sun visor
	Transmittance			
	550 nm	70% min.		16 ± 4%
	1100 nm	N/A		10% max.
	Solar reflectance			
	550 nm	5% max.		40% min.
	2400 nm	70% min.		N/A
	700 nm	N/A		55% min.

Figure 14.3.4.4-1 STS EVA Helmet and Extravehicular Visor Assembly Visual Range Limitations

MSIS 312

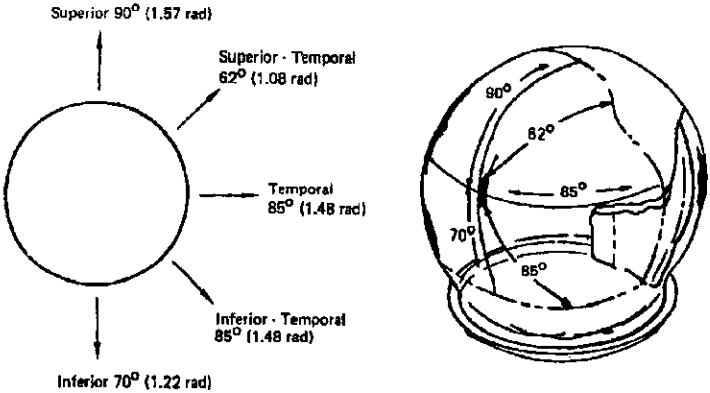

Note:
Operational field-of-vision is considerably modified by the protective extravehicular visor assembly

Figure 14.3.4.4-2 STS EMU Field-of-Vision as an Example Design Solution

MSIS 313

3. Mechanical Feedback - Mechanical control feedback shall be sufficient to override space suit glove attenuation so that the EVA crewmember receives positive indication that the control function is completed. The mechanical feedback actuation force shall be detectable but not less than 15.5 N (3.5 lb).

4. Load - EVA controls shall withstand crew-imposed loads of 1,254 Newtons in all directions or be protected from these loads.

5. Inadvertent Actuation - Protection shall be provided for all EVA controls to prevent inadvertent actuation. Toggle switches mounted on the pressure suit in sagittal or the transverse plane shall have their normal EVA operational position toward the crewmember.

6. Reach Envelope - EVA controls shall be located within the visual and reach envelope of the potential EVA crew population.

7. Spacing - Control spacing shall permit selective operation of individual controls by a space suited crewmember.

b. Displays - EVA display type and location shall conform to the IVA display requirements in Paragraph 9.4.2.3 of this document, with the following additions/exceptions:

1. Type - EVA display type shall be appropriate for the EVA task performed.

2. Loads - EVA displays shall withstand crew-imposed contact loads in all directions or be protected from these loads.

3. Field-of-View - EVA displays shall be located within the field-of-view permitted by the pressure suit and restraint system.

4. Readability - EVA displays shall be readable over the range of lighting extremes expected.

(Refer to Paragraph 9.2.3.2 Control/Display Integration and Placement Design Requirements for additional requirements onfield-of-view.)

c. Labeling - Labeling and color coding at EVA workstations shall conform to the IVA labeling and coding requirements in Paragraph 9.5 and sub-paragraphs of this document, with the following exceptions:

1. Attachment - EVA labels shall be mechanically or permanently attached to the mounting surface.

2. Color Coding - Color coding shall be used only when adequate white illumination is available at the EVA workstation.

14.4.3.3 EVA Workstation Lighting Design Requirements

(Refer to Paragraph 8.13.3., Lighting Design Requirements, and Paragraph 9.2.2.2.1, Workstation Illumination, for other requirements that pertain to lighting and illumination.)

Illumination categories and value ranges for generic EVA activities are presented in Figure 14.4.3.3-1, and minimum illumination levels for EVA tasks are given in Figure 14.4.3.3-2.

Additional illumination requirements include:

a. Lights - EVA workstations shall be illuminated by permanently mounted and/or portable lights. Illumination shall be adequate for task-specific requirements during both day and night conditions.

b. Glare - EVA lighting shall not cause excessive glare or create any other annoyance to the crew.

Type of activity	Illuminance range	
	Lux	(fc)
Translate a corridor	30 - 55	3 - 5
Lowlight work areas with occasional simple visual tasks	55 - 110	5 - 10
Visual tasks with large size or high contrast objects	215 - 325	20 - 30
Visual tasks with small size or medium contrast objects	325 - 750	30 - 70
Visual tasks with very small size or low contrast objects	540 - 1080	50 - 100
Visual tasks with objects of very small size and low contrast over a prolonged period	1080 - 2150	100 - 200

Figure 14.4.3.3-1 Illuminance Categories and Value Ranges for Generic EVAs

MSIS 315

EVA Tasks*	Minimum illuminance	
	Lux	(fc)
Astronaut movement to worksite for satellite repair mission or cargo transfer	55 - 110	5 - 10
Astronaut positions satellite in cargo bay or station worksite area	215	20
EVA satellite servicing worksite; hand tool utilization for simple, non-hazardous repair missions	325	30
EVA satellite servicing worksite; use of new and complex tools, non-hazardous	540	50
EVA satellite servicing worksite; complex tools and hazardous tasks	810	75

*** Assumes a background reflectance range of 5 - 80%**

Figure 14.4.3.3-2 Minimum Illuminance Levels for EVA Tasks

MSIS 316

c. Field-of-View - Light sources at workstations shall not be located within 1.05 radians (60 degrees) of the center of the crewmember's field-of-view.

d. Diffuse Lighting - Diffuse lighting shall be used and highly polished surfaces shall be avoided.

e. Fixtures - Light sources shall provide even illumination. Fixtures shall be designed to direct light into the desired area without causing visual discomfort to the crew. Light fixtures located close to workstations shall be designed to protect the crewmembers from thermal and physical hazards.

f. Luminance Ratio - The luminance ratio at work-stations shall conform to the following minimum specifications:

   1. 3:1 between task areas and immediate surround.

   2. 5:1 between task area and adjacent surround.

   3. 10:1 between task areas and remote surfaces.

   4. 20:1 between light sources and immediate adjacent surfaces.

g. Portable Lights - Portable lights shall be provided for unplanned maintenance, emergencies, and task performance where adequate fixed illumination is not available.

h. Exterior Light Controls - Light controls for permanently installed exterior lighting shall be located both at the exterior and interior of the space module at convenient locations.

i. Light Beam Spread - The lighting system shall have sufficient beam spread from a normal plane to provide the crewmember with good peripheral visual orientation.

14.4.3.4 EVA Crew Restraint Design Requirements

(Refer to Paragraph 8.9.3, Mobility Aids and Restraints Architectural Integration Design Requirements, and Paragraph 11.7.2.3, Personnel Restraint Requirements, for other requirements.)

a. Force Exertion - Foot restraints shall be used for actuation or operation of equipment which requires the crewmember to exert forces exceeding those given in Figure 14.4.3.4-1. EVA waist tether restraint systems may be used when actuation or operation of equipment does not require forces and durations greater than those specified in Figure 14.4.3.4-1.

Linear Forces	Duration
4.4 N (1.0 lbf)	4.5 sec
22.2 N (5.0 lbf)	2.1 sec
44.5 N (10.0 lbf)	1.4 sec

Note:
The Maximum distance through which forces may be applied is 61 cm (24 in)

Figure 14.4.3.4-1 Maximum Forces and Duration Capable of A Tethered But *Free-Floating* EVA Crewmember

MSIS 317

b. Foot Restraints - EVA foot restraints shall:

1. Be designed to permit easy insertion and removal of pressure suit boots by the crewmember.

2. Accommodate all boot sizes without adjustment during use.

3. Require a deliberate action for removal of a boot.

4. Provide a contingency method for removal of a jammed boot from a foot restraint.

5. Provide the capability to react to loads applied by the crewmember.

(Refer to Paragraph 11.7.2.3.2, Foot Restraint Design Requirements, for other requirements.)

c. EVA Safety Tethers and Safety Hooks - Tethers and tether hooks shall:

1. Have a handle that will fit the gloved hand of a space-suited crewmember, allow the hook to be free for utilization, and have a minimum length of 9.5 cm (3.75 in.).

2. Have design features that indicate whether the latch lock is engaged or disengaged, and to indicate direction for engaging and disengaging the lock.

3. Safety tether attachment hooks shall be removed and attachable by one-handed operation and employ a redundant lock feature such as push-to-open buttons that must be operated to disengage or release a tether.

4. Provide a contingency method for removal of a snagged tether or release of a crewmember from a tether hook.

d. Airlock- Provide handrails and tether attach points and other personnel restraints at the interior and exterior of the airlock.

e. EVA Suit Don and Doff - Provide personnel and equipment restraints at the EVA space suit facility.

14.4.3.5 EVA Equipment Tether Design Requirements

a. One-Handed Operations - All EVA equipment tethers shall be designed such that tether attachment and removal methods permit one-handed operation using a pressure suit glove.

b. Common Attachment Point - All equipment tethers shall use a common attachment method.

c. Tether Attachment Points - All equipment items shall be provided a standardized tether hook receptacle which is an integral part of each item and is compatible with NASA equipment. This standardized receptacle shall also be provided on the interfacing surface to which the item is to be secured.

d. Tether Lock Status Indicator - The tether lock shall be designed in such a way that it will be easy to recognize when the hook is locked/unlocked in body day and night lighting conditions.

14.5.3 EVA Mobility and Translation Design Requirements

14.5.3.1 EVA Translation Route Design Requirements

a. Equipment - All equipment located along EVA translation routes shall be designed to withstand repeated use as mobility aids, or the equipment shall be guarded or protected. There shall be no protrusions, corners, or sharp edges along EVA translation routes.

(Refer to Paragraph 6.3.3, Mechanical Hazards Design Requirements, for related requirements.)

b. Translation and Mobility Aids :

1. Mobility aids shall be located at terminal points and direction change points on established crew translation paths.

2. Mobility aids shall be placed in all locations where equipment is not available as a substitute.

3. For EVA translation, mobility aids shall not be separated by more than 90 cm (36 in.). The preferred spacing is 60 cm (24 in.).

c. Handholds:

1. The orientation of translation and mobility handholds shall be such that the body position normally assumed to perform a task may be attained, and that normal body movement may be accommodated.

2. They shall also be oriented such that the plane formed by the handhold longitudinal axis and the cross-section major axis is approximately parallel with the body torso frontal plane.

d. Danger Warnings:

1. Translation and mobility handholds located within 30.5 cm (12 in.) of flight equipment shall be identified and color coded (regarding danger of injury to the crewmember due to equipment failure).

2. Equipment located along translation routes that could be damaged by a translating crewmember shall be identified and color coded.

e. Cross Section of the Translation Route - the dimension of the translation route (see Figure 14.5.3.1-1) shall not be smaller than the dimension required for the EVA crewmember to reverse direction (EMU height + clearance). The exceptions to this are:

1. Corridors where access is possible from either side and the length is no more than twice the length of the smallest EVA suited crewmember.

2. Corridors that have access from at least one end and are not longer than the shortest EVA suited crewmember.

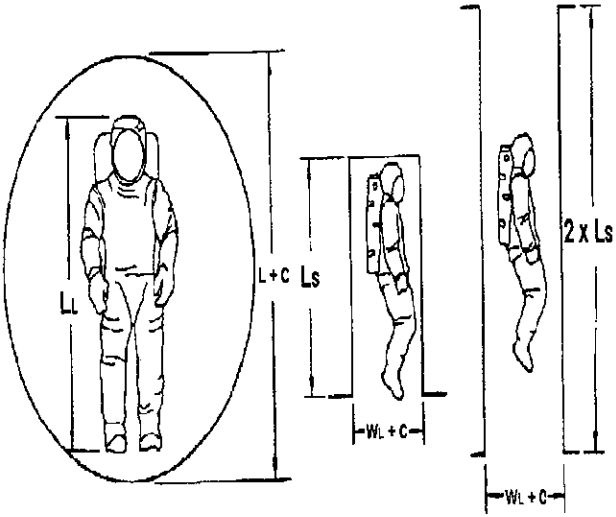

W = Width at widest point; W_L = longest/largest

L = Length of EVA system; L_S = shortest/smallest; L_L = longest/largest

W = Width at widest point; W_L = longest/largest

Figure 14.5.3.1-1 Cross-Section of the EVA Translation Route

MSIS 324

f. EVA Hatches and Doors - The EVA hatches shall be operable form either side of the hatch. EVA translation aids shall be placed around the hatchway on both sides to support ingress/egress.

g. Equipment Accessibility - Translation and mobility handholds shall be positioned such that crew-operated equipment and consoles are accessible and are not obstructed visually or physically by the handholds.

14.5.3.2 EVA Mobility Aids Design Requirements

(Refer to Paragraph 11.8.2.2.1, Handhold and Handrail Dimensional Requirements, and Paragraph 8.9.3, Mobility Aids and Restraints Design Requirements, for other handhold dimensions that may pertain to EVA mobility requirements.)

a. Dimensions - EVA handhold and handrail dimensions shall conform to Figure 14.5.3.2-1.

b. Mounting Clearance - The minimum clearance distance between the low surface of the handrail/handhold and the mounting surface is 5.7 cm (2.25 in.).

c. Spacing for Translation - For EVA translation, handholds/handrails shall not be separated more than 92 cm (36 in.). Maximum spacing of 61 cm (24 in.) is preferred.

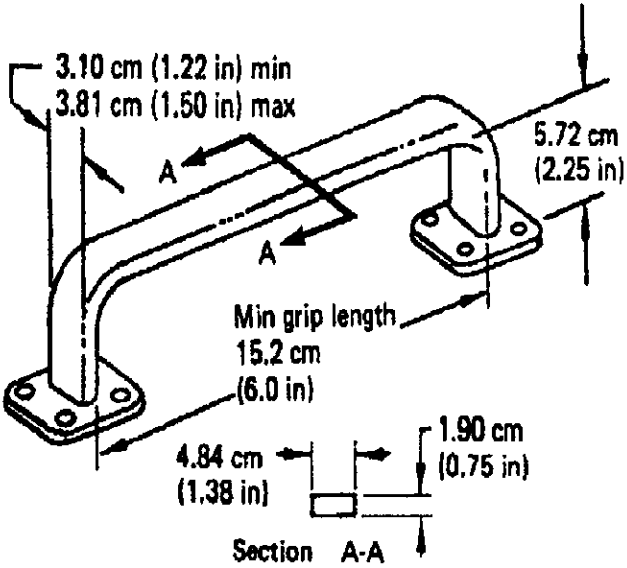

Note: Dimensions ±0.15 cm (±0.060 in)

Figure 14.5.3.2-1 Standard EVA Handhold Dimensional Requirements

MSIS 325

d. Spacing for Worksites - Handrails/handholds shall not exceed 45.8 cm (18 in.) above or below the shoulder or 61 cm (24 in.) to the left or right of the body centerline when working in a foot-restraint position.

e. Safety Tether Attachment - EVA handrails/handholds will accommodate safety tether hooks at a spacing not to exceed 90 cm (36 in) preferred 60 cm (24 in).

f. Lighting - EVA handholds/handrails shall be illuminated in accordance with Paragraph 14.4.3.3.

g. Color - EVA handholds/handrails shall minimize specular reflection and shall be a standard color throughout the space modules, be clearly visible, and have a high visual contrast with the background.

h. Temperature - Surface temperature of EVA handholds/ handrails shall be compatible with the touch-temperature limits required by the space suit glove.

(Refer to Paragraph 14.2.3.11, EVA Touch Temperature and Pressure Design Requirements, for specified EVA glove temperature requirements).

14.5.3.3 EVA Translation Restraints Design Requirements

Except for free flying maneuvering unit operation, EVA crewmembers in microgravity environments shall always be attached or otherwise restrained to the space module. Safety tether points shall be located as follows:

a. Translation Routes - No more than 90 cm (36 in.) between EVA translation aids, 60 cm (24 in.) preferred.

b. Direction Change - At either side of a directional change in equipment transfer or a distinct hand-off point.

c. Equipment Transfer Paths - At the extreme ends of equipment transfer paths.

d. Tethers and Tether Hooks - Translation route tethers and tether hooks shall conform to the requirements in Paragraph 14.4.3.5, EVA Crew Restraint Design Requirements.

14.5.3.4 EVA Airlock Design Requirements

(Refer to Paragraph 8.10, Hatches and Doors, for additional requirements that may pertain to airlock hatches and doors requirements.)

a. Airlock Hatches - Airlock hatches shall be designed to be operated by a single EVA crewmember.

b. Any tools required for emergency contingency airlock operation shall be located near the airlock.

14.5.3.5 EVA Passageway Design Requirements

a. Minimum Cross Section - The cross section of EVA passageways shall be based on the maximum width of the largest space-suited crewmember who will use the passageway.

b. Direction Change - When abrupt changes in direction of travel are necessary, additional volume shall be provided for a change in direction normal to the corridor being traversed.

14.5.3.6 EVA Equipment Transfer Design Requirements

(Refer to Paragraph 11.8.3.2, Equipment Mobility Aid Design Requirements, for *other equipment transfer requirements.)*

All loose EVA equipment and EVA cargo shall be provided with attachment points or restraints so that it can be firmly secured or tethered at all times during transfer.

14.6.2.3 EVA Tools Design Requirements

(Refer to Paragraph 11.2.3, Tool Design Requirements, for tool requirements that may be applicable to both IVA and EVA).

a. Throw Angles - Throw angles for EVA ratcheting shall be at least 1.57 rad (90 deg.), and shall allow right- or left-handed operations.

b. Handles - A non-slip surface shall be incorporated which minimizes space suit glove abrasion.

c. Access - For EVA gloved-hand access around the tool handle, 7.6 cm (3 in.) of clearance shall be provided (see Figure 14.6.2.3-1).

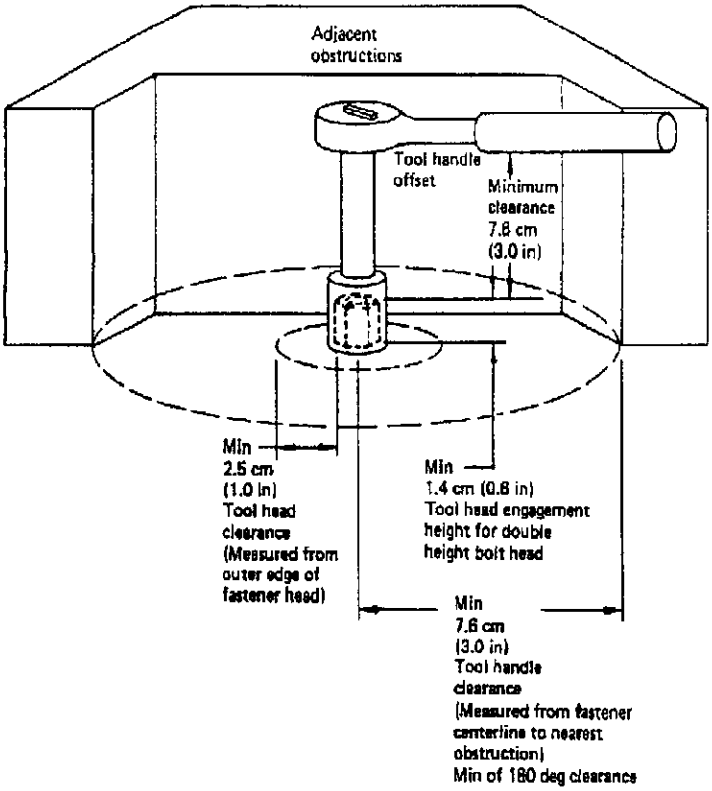

Figure 14.6.2.3-1 Visual and Hand Access for EVA Tools and Required Clearance

MSIS 326

d. Tethering - A means shall be provided on all tools for tethering the tool at all times to prevent inadvertent loss. The design shall be such that the attachment and removal methods permit one-handed operation using pressure suit glove.

e. Battery Packs - Battery powered tools shall be designed so that the battery packs can be replaced at the EVA worksite. Power tools using battery packs shall have a level of charge indicator or an indication as to when a battery pack is required to be replaced.

f. Visibility - All EVA tools shall be visible during installation, removal, and operations.

14.6.3.3 EVA Fasteners Design Requirements

a. EVA Fastener Size - The minimum size of fasteners, knobs, and head size for space-suited hand operation shall be 3.8 cm (1.5 in.) diameter and 1.9 cm (0.75 in.) high. Maximum EVA fastener size shall not exceed the grasp capabilities of the smallest EVA crewmember.

b. Captive - Captive fasteners shall be used wherever possible. Where existing hardware or other factors preclude captive fasteners, special provisions for captive devices shall be made.

c. Indication of Status - EVA actuated fasteners devices shall be verifiable visually accessible to ensure proper seating or restraint in stowed or installed locations.

d. Contingency Operation - All EVA hand-actuated rotational fasteners shall be provided with either an internal or external hexagonal feature for contingency operation with a hand tool.

e. Fastener Heads - EVA-operable bolt fasteners shall not require a push force to remain engaged with tool. EVA fasteners operated by hand or power tool shall have a double-height Hex-head bolt head.

(Refer to Paragraph 11.9.3, Fastener Design Requirements, for additional requirements.)

14.6.4.3 EVA Connectors Design Requirements

a. Clearance - Clearance shall be provided for gloved- hand operation of connectors as shown in Figure 14.6.4.3-1.

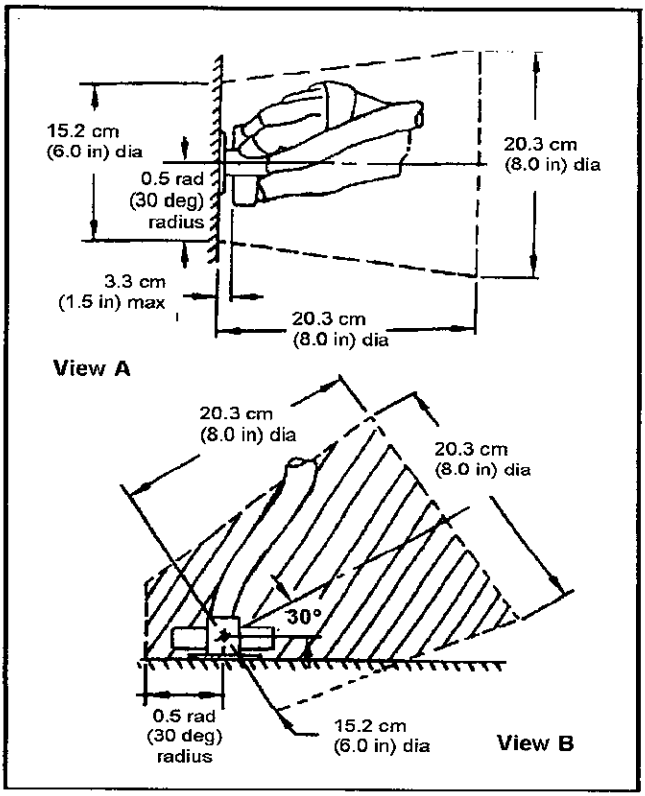

Figure 14.6.4.3-1 Typical EVA Gloved Hand Clearances Required for Wing Tab Connectors

MSIS 329

b. Wing Connectors - EVA wing connectors, similar to Figure 14.6.4.3-2, shall be used wherever appropriate. Wing length shall be proportional to the torque required.

c. Multiple Connectors - Clearance between single and staggered rows of connectors shall be at least 3.8 cm (1.5 in.) as shown in Figure 14.6.4.3-3.

d. Spacing - Spacing of connectors shall allow the gloved hand access to the connector in all directions.

e. Status - Methods such as visual indications, shall be provided to indicate connector mating status.

f. Pressure - High pressure pneumatic connectors and lines shall be tethered or otherwise captured to the main structure.

g. Protecting Caps - All connector protective caps shall be tethered in the proximity of the connector.

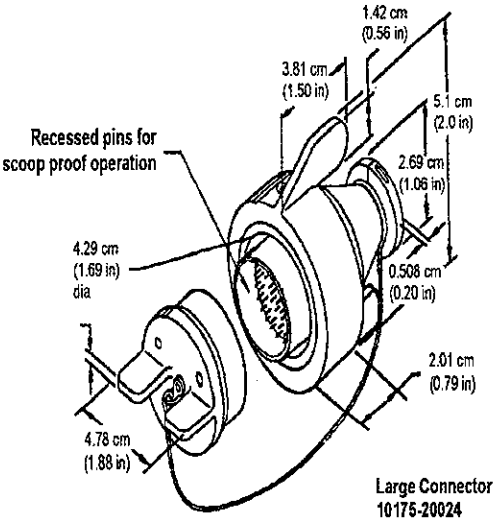

Figure 14.6.4.3-2 EVA Wing Tab Connector (Large Size)

MSIS 330

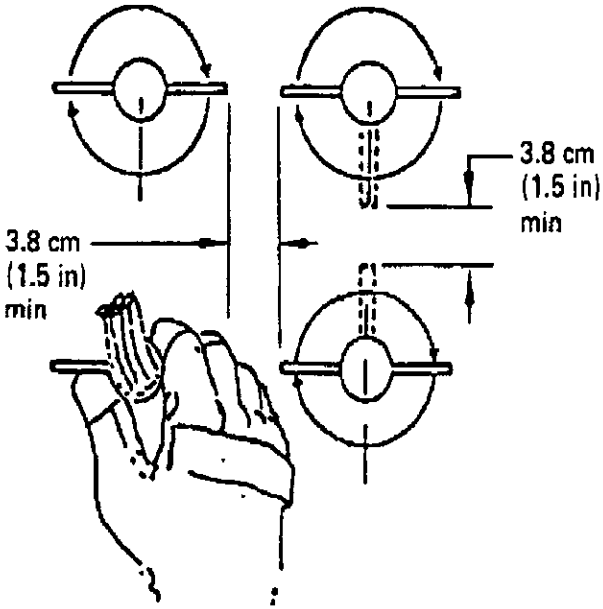

Figure 14.6.4.3-3 Minimum Clearance Between Wing Tab Connectors

MSIS 331

h. Strain Relief - Strain relief shall be provided to prevent inadvertent breakage due to induced loads.

i. Alignment - All connectors shall have provisions to ensure proper alignment during mating and demating and visible alignment markings.

j. Scoop Proof - All connectors shall be scoop proof. Scoop proof refers to the impossibility of a mating receptacle connector being inadvertently cocked into a mating plug and damaging or electrically shorting the contacts.

k. Mate/Demate - The actuation force to mate or demate an electrical or fluid connector shall not exceed 4 Nm (35 in./lb) for the preferred diameter of 5.75 cm (2.25 in.) for connectors.

l. Electrical Hazards - All electrical connectors shall have provisions for alignment and mating of connector shells prior to electrical path connections. Electrical paths shall be broken prior to connector disconnections.

(Refer to Paragraph 11.10.3, Connector Design Requirements, for additional information applicable to both EVA and IVA connectors.)

14.7.3 EVA Enhancement Systems Design Requirements

EVA Enhancement systems shall have safety tether attachments between the EVA crewmember and the enhancement system and or between the enhancement and the main space module, except for free-flying mobility units or surface rover.

NOTES

NOTES

Index

A

Acceleration, 5-4
Linear, 5-4
Rotational, 5-4
Acoustics, 5-4
General, 5-11
Noise Exposure, 5-11
Advisory and Tutorial, 9-55
Advisory Display and Annunciation, 9-55
Tutorial Display and Annunciation, 9-56
Alarm Classification, 9-50
Caution Display, 9-50
Emergency Display , 9-50
Warning Signal , 9-50
Alphanumeric, 9-62
Character Height, 9-64
Character Measurement, 9-65
Character Width, 9-64
Font Style , 9-62
Punctuation, 9-63
Spacing, 9-65
Special Character, 9-63
Stroke Width , 9-64
Titles, 9-63
Upper/Lower Case, 9-63
Annoyance Noise, 5-17
Impulse, 5-20
Narrow-Band, 5-17
Wide-Band, Long-Term, 5-17
Wide-Band, Short-Term, 5-20
Audio Caution and Warning System, 9-53
Alarm Characteristics, 9-53
Alarm Control, 9-54
Verbal Alarm, 9-55
Audio Displays, 9-48
General, 9-48
Input/Output Equipment, 9-49
Operator Comfort and Convenience, 9-49

B

Body Restraint, 11-15
Dimensional, 11-16
Donning/Doffing, 11-15
Finish and Color, 11-16
Loads, 11-15
Body Waste Management Facilities, 10-4
Defecation and Urination, 10-4
Other Waste Products, 10-5

C

Cable Management, 11-30
Caution and Warning, 9-50
Alarm Classification, 9-50
Audio Display, 9-53
General, 9-51
Visual Display, 9-52
Closures and Covers, 11-9
Clothing, 11-29
General, 11-29
Packaging, 11-30

Computer Input
- Bar Code Reader, 9-36
- Joysticks, 9-32
- Keyboard, 9-29
- Light Pen, 9-33
- Mouse, 9-34
- Stylus and Grid, 9-35
- Touch-Sensitive Display, 9-36
- Track Ball, 9-35

Computer Input Devices, 9-29
Congestion and Interference, 9-1
Connector, 11-24
- Arrangement, 11-26
- Electrical, 11-24
- Fluid, 11-24
- Identification/Alignment, 11-25
- Optical, 11-25
- Structural, 11-25

Consistent Control/Display Placement, 9-4
Control Spacing, 9-1
Control Types, 9-13
- Circuit Breaker, 9-27
- Crank, 9-18
- Foot-Operated Switch, 9-22
- Handwheel, 9-18
- Key-Operated Switch, 9-29
- Knob, 9-13
- Legend Switch, 9-28
- Lever, 9-18
- Pedal, 9-23
- Push-Pull , 9-25
- Pushbutton, 9-21
- Rocker Switch, 9-25
- Slide Switch, 9-28
- Thumbwheel , 9-15
- Toggle Switch, 9-21
- Valve, 9-17

Control/Display Complexity and Precision, 9-6
Control/Display Grouping, 9-3
Control/Display Movement Compatibility, 9-4
Control/Display Movement Ratio, 9-5
Controls, 9-11
- Accidental Actuation, 9-12
- Computer Input Devices, 9-29
- For Voice Communication, 9-37
- General, 9-11
- Speech Transmission Equipment, 9-36
- Types, 9-13

Crewmember Protection, 6-7
- Bio-Instrumentation System Shock Protection, 6-8
- Grounding , 6-7
- Insulation, 6-7
- Interlocks, 6-7
- Moisture Protection, 6-7
- Plugs and Receptacles, 6-7
- Power Cords, 6-7
- Protective Cover, 6-7
- Spacing Between Connectors, 6-8
- Static Discharge, 6-8
- Warning Labels, 6-7
- Warning Labels Plus Recessed Connectors, 6-7

Cursor Position Designation, 9-81
- Placeholding Cursor, 9-82
- Pointing Cursor, 9-81

D

Data Display, 9-69
Coding, 9-71
Format, 9-72
Functional Area Tables, 9-70
Graphics, 9-70
Information Display Rate, 9-73
Matrix Tables, 9-69
Tables, 9-69
Text, 9-69
Windows, 9-71
Design For Maintainability, 12-1
Equipment , 12-1
Maintenance Information Mgmt., 12-8
Testability, 12-6
Display Readability, 9-1
Display Types, 9-40
Clock and Timer, 9-42
Digital Display, 9-44
Flag Display, 9-43
Hardcopy Display, 9-47
Legend Light, 9-40
Light Emitting Diode, 9-44
Maintenance Display, 9-40
Scales and Pointers, 9-40
Visual Display Terminal, 9-45
Drawer and Rack, 11-6
Common Requirements, 11-8
Equipment, 11-8
Interfacing , 11-6
Stowage, 11-8

E

Electrical Hazards, 6-5
Chassis Leak Current, 6-5
Crewmember Applied Current, 6-5
Crewmember Protection, 6-7
Emergency Control/Display Placement , 9-4
Envelope Geometry, 8-5
Crew Station Body Envelopes, 8-7
Equipment, 12-1
General Maintainability, 12-1
Physical Accessibility, 12-2
Removal, Replacement and Modularity, 12-6
Visual Access, 12-5
Equipment Mobility Aid, 11-20
Equipment Requirements (SMF), 10-9
Central Supply, 10-10
Countermeasures, 10-10
Data Base and Communications Capability, 10-9
Dental Care, 10-10
Diagnostic Imaging, 10-10
Environmental Monitoring, 10-9
For Processing & Storage of Deceased, 10-11
Hyperbaric Treatment Facilities, 10-10
Intravenous Fluid Injection , 10-10
Laboratory, 10-10
Medical Life Support, 10-10
Pharmaceuticals, 10-10
Physicians's Instruments, 10-10
Physiological Monitoring, 10-10
Safe Haven Medical , 10-10
Surgery/Anesthesia, 10-10
Equipment Restraints, 11-16
Equipment/Supplies, 10-8
Exercise, 10-8

EVA Anthropometry , 14-5
EVA Connectors, 14-16
EVA Enhancement Systems, 14-18
EVA Fasteners, 14-15
EVA General Safety, 14-1
EVA Mobility and Translation, 14-12
Airlock, 14-15
Equipment Transfer, 14-15
Mobility Aids, 14-13
Passageway, 14-15
Translation Restraints, 14-15
Translation Route, 14-12
EVA Physiological, 14-1
Body Waste Management, 14-2
Food and Drinking Water, 14-2
Medical Monitoring, 14-2
Metabolic Workload, 14-1
Radiation Dosage, 14-3
Strength-Related, 14-1
Suit Pressure, 14-3
Touch Temperature and Pressure, 14-3
EVA Tools, 14-15
EVA Workstation and Restraint, 14-5
Control and Display, 14-5
Crew Restraint, 14-10
Equipment Tether, 14-12
Work Envelope, 14-5
Workstation Lighting, 14-8
Exercise Countermeasure, 7-3

F

Fastener, 11-20
General, 11-20
Hand-Actuated, 11-22
IVA, 11-23
Tool-Actuated, 11-22
Fire Detection, 6-8
Reset and Self-test, 6-8
Sensor Replacement, 6-9
System Signals, 6-8
Fire General, 6-8
Material Selection, 6-8
Protection System, 6-8
Fire Protection and Control, 6-8
Detection, 6-8
Extinguishing , 6-9
General, 6-8
Warning System , 6-9
Foot Restraint, 11-13
Donning/Doffing, 11-14
Durability and Color, 11-15
General, 11-13
Loads, 11-14

G

Galley and Wardroom, 10-7
Cleaning, 10-8
Food Packaging and Stowage, 10-8
Food Selection, Preparation, Consumption, 10-7
Overall, 10-7

H

Hand and Tool Integration, 11-1
Actuation Forces and Direction of Action, 11-1
Handedness, 11-1
Handgrip Size and Shape, 11-1

Handhold and Handrail, 11-18
Coding, 11-19
Design Loads, 11-19
Dimensions, 11-18
Finish, 11-19
Mounting, 11-20
Temperature, 11-20
Handle and Grasp, 11-11
Dimensions, 11-13
General, 11-11
Location, 11-11
Nonfixed, 11-12
Hatch and Door, 8-9
Location, 8-9
Minimum Size, 8-11
Opening and Closing Mechanisms, 8-10
Operating Forces, 8-10
Pressure Hatch Indicator/Visual Display, 8-10
Shape, 8-11
Hearing Conservation, 5-11
Impulse Hearing, 5-12
Infrasonic, Long-Term Annoyance, 5-12
Narrow-Band, Long Term, 5-12
Ultrasonic, Long-Term Annoyance, 5-12
Wide-Band, Long Term, 5-11
Housekeeping, 13-1
Air Filter, 13-3
General, 13-1
Surface Cleaning, 13-1
Vacuum Cleaning, 13-2
Human/Workstation Configuration, 9-6
Hypertext, 9-83
Editing, 9-83
Graphics Editing, 9-84
Manipulating Data, 9-83

I

Illumination Level, 8-12
for Dark Adaptation, 8-12
For Specific Tasks, 8-12
General Interior, 8-12
of Sleeping Areas, 8-12
Individual Crew Quarters, 10-6
Information Management, 13-4
Electronic, 13-5
General, 13-4
Hardcopy, 13-4
Inventory Control, 13-3
General, 13-3
Reports, 13-3
Ionizing Radiation, 5-20
Monitoring and Dosimetry, 5-20
Personnel Protection, 5-21
Protection, 5-20

K

Keyboard, 9-29
General, 9-29
Layout, 9-29

L

Labeling, 9-56
Alignment Marks/Interface Identification, 9-58
Alphanumeric , 9-62
Caution and Warning Labels, 9-61
Contingency Labels and Marking Devices, 9-61
Display Label Placement , 9-57
Equipment Identification, 9-58
Failed/Expendable Item, 9-60
Grouped Controls and Displays, 9-61
Location and Orientation Coding, 9-59
Operating Instruction, 9-59
Readability, 9-56
Scale Marking, 9-57
Standardization, 9-56
Stowage Container Labeling, 9-60
Labeling and Coding, 9-56
Coding, 9-65
Labeling, 9-56
Laundry Facility, 10-11
Light Distribution, 8-14
Brightness Ratio, 8-14
Glare From Light Sources, 8-14
Reflected Glare, 8-14
Lighting, 8-12
Color , 8-14
Distribution, 8-14
Fixtures and Controls, 8-16
Illumination Level, 8-12
Medical, 8-16
Workstation Illumination, 8-17
Location Coding, 8-1
Alphanumeric , 8-1
By Color Coding, 8-3
Directional Designation, 8-1
With Placards, 8-3
Long Term Mission Atmosphere, 5-1
Composition and Pressure, 5-1
Microbiological-Monitoring & Control, 5-4
Monitoring, 5-1
Toxicological Monitoring, 5-1

M

Maintenance Controls/Displays , 9-4
Maintenance Workstation, 9-9
Mechanical Hazards, 6-1
Burrs, 6-5
Corner and Edge, 6-1
Exposed Corner, 6-4
Holes, 6-4
Latches, 6-4
Levers, Cranks, Hooks, and Controls, 6-5
Mechanically Stored Energy, 6-5
Protective Covers on Exposed Protrusions, 6-4
Screws and Bolts, 6-4
Securing Pins, 6-4
Microbiological-Monitoring & Control, 5-4
Microbial Decontamination, 5-4
Microgravity Countermeasure Facility, 10-8
Display Capabilities for Exer Crewmembers, 10-9
Equipment/Supplies, 10-8
Exercise Environment, 10-9
Monitoring, 10-9
Program Administration, 10-9
Mobility Aids and Restraints, 8-9
IVA Mobility Aid Integration, 8-9
IVA Restraint Integration, 8-9

Mounting Hardware, 11-9
Alignment Devices, 11-11
General, 11-10
Movement Within User Interface, 9-81
Paging, 9-82
Requirements for Position Designation, 9-81
Scrolling, 9-82
Searching, 9-82

N

Noise Exposure, 5-11
Annoyance , 5-17
Hearing Conservation, 5-11
Voice Communication, 5-12
Nonexercise Countermeasures, 7-4
Nutrition, 7-1
Food, 7-1
Potable Water, 7-1

O

Orientation, 8-1
Orientation , 9-1

P

Packaging, 11-28
Personal Ancillary Equipment, 11-30
Personal Hygiene, 7-4, 10-1
Body Grooming, 7-4
Clothing & Equipment Cleansing, 7-5
Grooming and Shaving, 10-3
Hair Cutting, 10-3
Oral Hygiene, 7-4, 10-3
Partial Body Cleansing, 7-4, 10-1
Water, 7-5
Whole Body Cleansing, 7-5, 10-1
Personnel Restraints, 11-13
Body, 11-15
Foot, 11-13
General, 11-13
Sleep, 11-16
Potable Water, 7-1
Quality, 7-1
Quantity, 7-3
Temperature, 7-3
Pre/Post-Mission Health Management, 7-5
Preferred Control/Display Location, 9-3

R

Readability, 9-38
Display Indicator Contrast, 9-38
Display Size, 9-39
Illumination, 9-38
Reflections, 9-38
Vibration, 9-39
Real-Time Interaction, 9-74
Actions in Direct Manipulation Interface, 9-78
Command Keystrokes, 9-75
Command Language, 9-74
Data Forms/Form Filling, 9-78
Default Values for Data Forms, 9-80
Direct Manipulation, 9-77
Function Keys, 9-75
Icons, 9-78

Menus, 9-75
Permanent Menus, 9-76
Question and Answer, 9-80
User-Computer Dialogues, 9-74
User-definable Macros, 9-80
User-Requested Menus, 9-77
With Windows, 9-78
Routine Health Monitoring, 7-5
Crew, 7-5
Environmental, 7-9
Water Supply, 7-8

S

Safe Haven Medical, 10-10
Contingency Operation, 10-11
Nominal Operation, 10-10
Saving, 9-84
Sleep, 7-4
Space Medical Facility, 10-9
Environmental, 10-9
Equipment Requirements, 10-9
Stowage Facility, 10-12
Strength, 1-1

T

Testability, 12-6
Fault Detection and Isolation, 12-7
Test Point, 12-7
Thermal Environment, 5-21
Monitoring and Control, 5-21
Temperature, Humidity, and Ventilation, 5-21
Tool, 11-1
Access, 11-3
Commonality, 11-1
Hand and Tool Integration, 11-1
Labeling and Identification, 11-3
Special Features, 11-3
Stowage, 11-2
Tethering/Retention, 11-2
Touch Temperature , 6-8
Traffic Flow, 8-7
Congestion Avoidance, 8-7
Emergency and Escape Route, 8-7
Translation Path, 8-8
Clearances, 8-8
Marking of, 8-9
Minimum, 8-8
Obstructions and Hazards, 8-9
Trash Management Facility, 10-11

U

User Guidance, 9-84
Consistent Terminology, 9-84
Error Handling, 9-85
On-Line Help, 9-87
On-Line Instruction, 9-87
Prompts, 9-87
Sequence Control, 9-88
System Status Messages, 9-85
User Feedback, 9-84
User Input, 9-88
Data Entry Design, 9-88
Interactive Control, 9-89

V

Viewing, General, 11-27
Size, 11-27

Visual Display, 9-38
Display Types, 9-40
Information Presentation, 9-39
Maintenance, 9-48
Readability, 9-38
Visual Space, 9-6
Voice Communication, 5-12
Direct, 5-12
Indirect, 5-17

W

Water Supply Monitoring, 7-8
Microbiological Monitoring & Treatment, 7-8
Physical, 7-9
Quality, 7-8
Toxicological, 7-8
Window, 11-26
General Viewing, 11-27
Maintenance, 11-28
Physical Protection, 11-27
Visual Protection, 11-27
Window Integration, 8-11
Window Workstation, 9-8
Workstation Anthropometric, 9-6
Workstation Color, 9-1
Workstation Illumination, 9-1
Workstation Restraints and Mobility Aid, 9-6

PLEASE RETURN BY 1 JUN 95

Overall rating of the NASA Standard 3000 Handbook Volume III:

Very good Good Satisfactory Fair Poor

What I found most useful in the Handbook:

_____

_____

_____

What I would delete, add, change, etc. in future editions of the Handbook:

_____

_____

_____

Other comments:

_____

_____

_____

Your job function (design, test, program management, etc.):

_____

_____

_____

User Information (optional)

Name: _____

Organization: _____

Address: _____

_____

_____

Phone: _____

Affix
Postage

Return To: John Jackson
Mail Code SP2
Johnson Space Center
Houston, TX 77058